Preparing Enriched Stable Isotope Targets at Oak Ridge National Laboratory

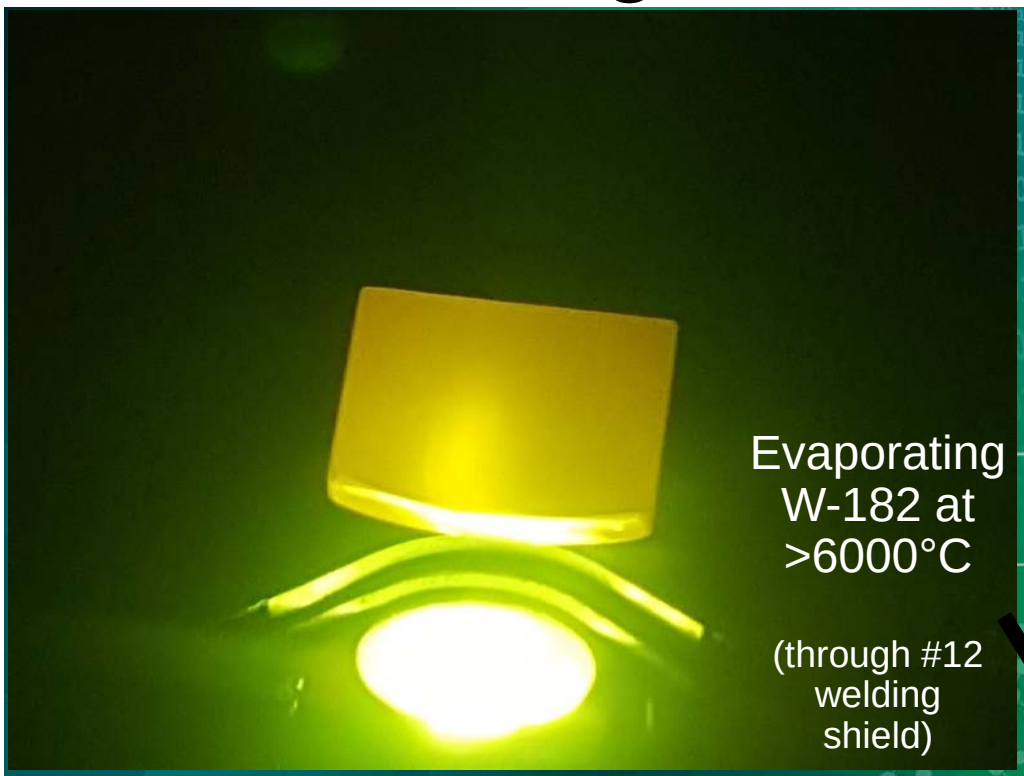

Evaporating W-182 at >6000°C

(through #12 welding shield)

Is there a better way?

ORNL is managed by UT-Battelle, LLC
for the US Department of Energy

U.S. DEPARTMENT OF ENERGY

International Nuclear Target Development Society Conference
October 8th-12th 2018
Michigan State University-FRIB
East Lansing, Michigan, USA

Facility for Rare Isotope Beams
at Michigan State University

Mike Zach, Materials Processing Researcher
Stable Isotope Group, Physics Division
Oak Ridge National Laboratory

My job: I work with researchers to find creative ways to solve their research needs.

I do whatever it takes
to transform enriched stable isotopes making whatever form the researcher needs to make their experiments successful.

This talk

- Overview
- Project of e-beam W-182
- Is there a better way? (New tool for our lab)
- Invitation

Isotopes Available To You Through Isotopes.gov

- ~225 isotopes of ~50 elements available
- Custom chemical conversions of these isotopes

See www.isotopes.gov

Group IA	IIA	IIIB	IVB	VB	VIB	VIIB	VIII		IB	IIB	IIIA	IVA	VA	VIA	VIIA	Inert Gases
H																He 1
Li 2	Be 1										B 2	C 2	N 1	O 2	F	Ne 1
Na 1	Mg 3										Al 1	Si 3	P	S 4	Cl 2	Ar 2
K 3	Ca 6	Sc	Ti 5	V 2	Cr 4	Mn	Fe 4	Co 1	Ni 5	Cu 2	Zn 5	Ga 2	Ge 5	As 2	Se 6	Br 2	Kr 5
Rb 2	Sr 4	Y 2	Zr 5	Nb	Mo 7	Tc 3	Ru 7	Rh	Pd 6	Ag 2	Cd 8	In 2	Sn 10	Sb 2	Te 8	I	Xe 6
Cs	Ba 7	La† 2	Hf 6	Ta 2	W 5	Re 2	Os 7	Ir 2	Pt 6	Au 1	Hg 7	Tl 2	Pb 4	Bi 1	Po 1	At 1	Rn
Fr	Ra 3	Ac‡ 2														

†	Ce 4	Pr	Nd 7	Pm	Sm 7	Eu 2	Gd 7	Tb	Dy 7	Ho 2	Er 6	Tm	Yb 7	Lu 2
‡	Th 2	Pa	U 5	Np 2	Pu 6	Am 2	Cm 4	Bk 1	Cf 2	Es	Fm	Md	No	Lr

Technical Services Available Through Stable Isotope Group

- Dispensing of isotopes as compounds or metals
- Custom synthesis of enriched isotopes
- Pyrochemical conversion of high-purity metals
- Arc melting and alloying
- Dispensing of enriched isotopic gases
- Hot and cold rolling (mm to µm thicknesses)
- Wire rolling and swaging
- High-vacuum evaporation (resistance, RF, e-beam)
- Inert processing of reactive metals

^{106}Pd foils
Ø2 cm x 1.5 mg/cm^2

^{182}W thin film coatings on tiles for fusion research

2 liters of ^{136}Xe

^{65}Cu Ø38 mm x 3 mm
valued at $180k

^{155}Gd foils for neutron capture cross section measurements

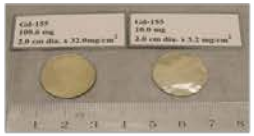

Small milligram quantities of isotopes provided for tracer studies, analytical standards or sample spikes

Ni-62 pellets for production of Ni-63

Sr-88 metal strips to create ions used for trapped-ion quantum computation

Shipment can be made in 10^{-6} Torr environment

High-purity distillation of ^{88}Sr after lanthanum reduction

Electron beam evaporation of ^{182}W

W-182 Coating Used as a Fusion Research Tool

E-beam Evaporator

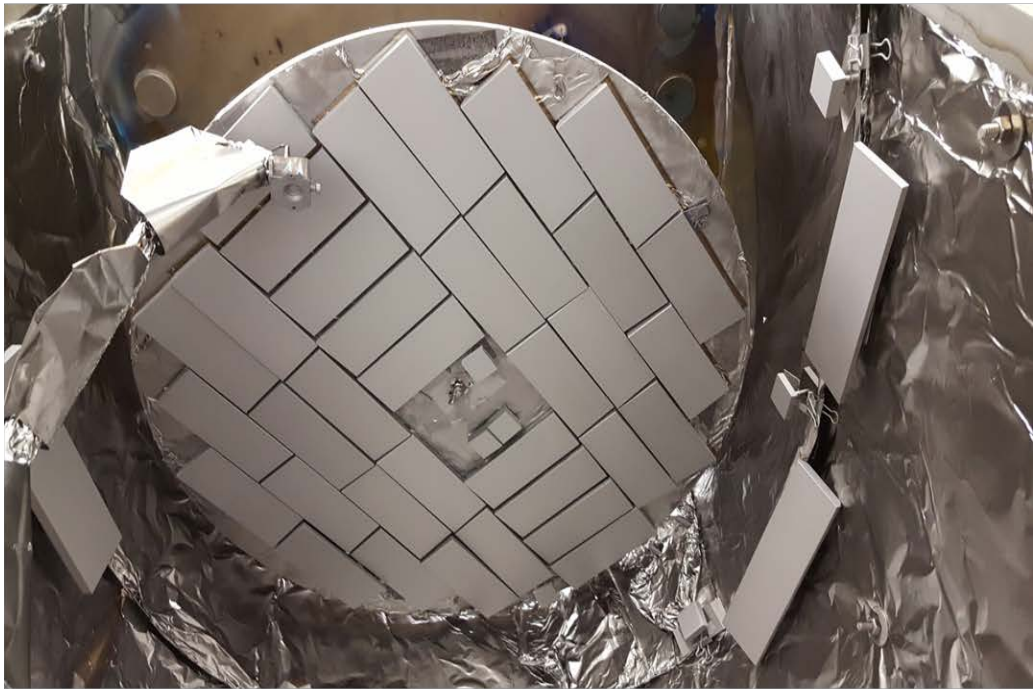

With plenty of challenges
Two runs for 72 tiles

^{182}W Source Probes flight path to the Collector

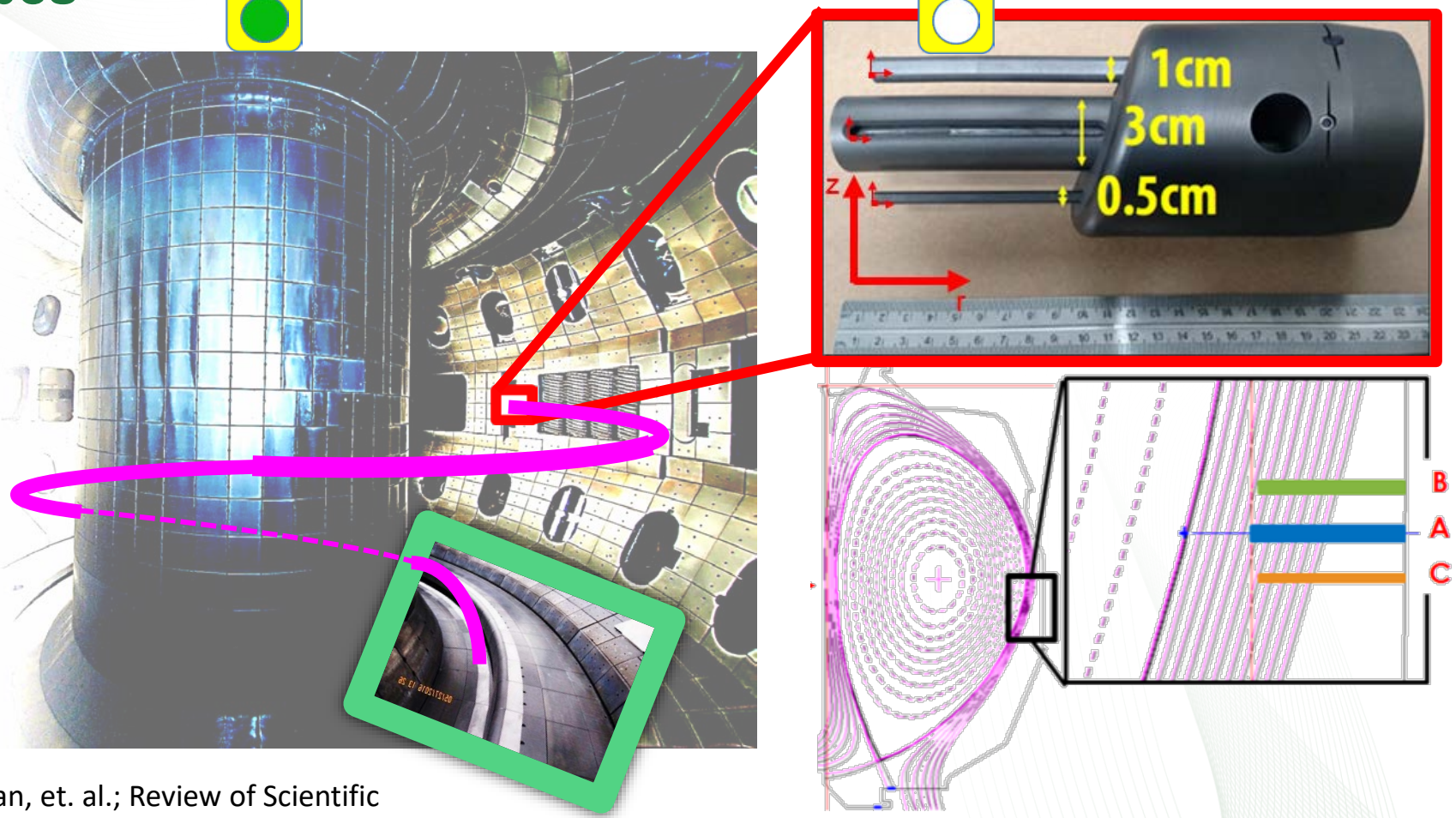

Donovan, et. al.; Review of Scientific Instruments (Vol.89, Issue 10)

UT Graduate Student Working at ORNL Is Using LAMS

- Microdestructive
- LAMS avoids
  - multistep dissolution
  - hazardous chemical HF
- Gives isotopic fingerprint with spatial resolution
- Addition to solution based ICP-MS and Rutherford backscattering spectroscopy

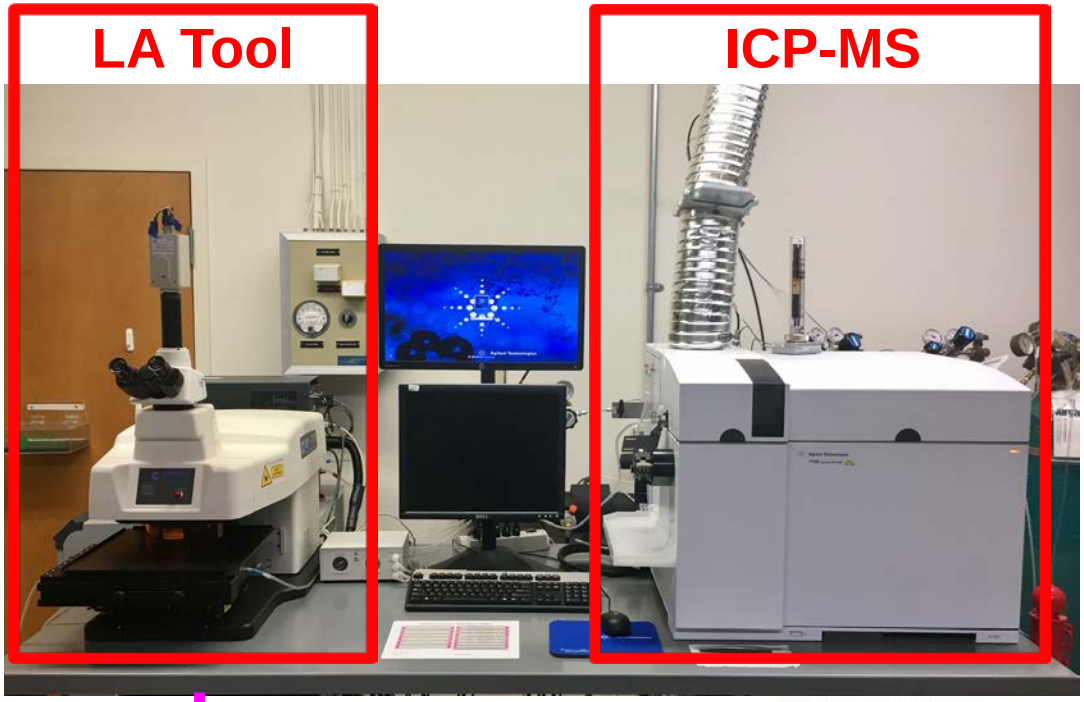

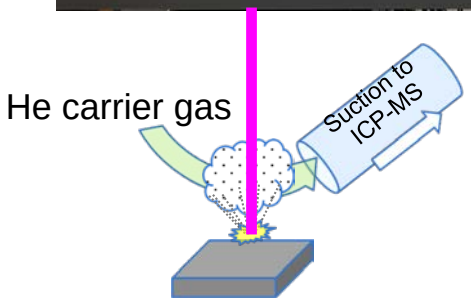

Analytical isotopic mapping

- Laser ablation / inductively coupled plasma – mass spectroscopy gives spatial distribution of elements and isotopes
- This experiment: tracks erosion and redeposition

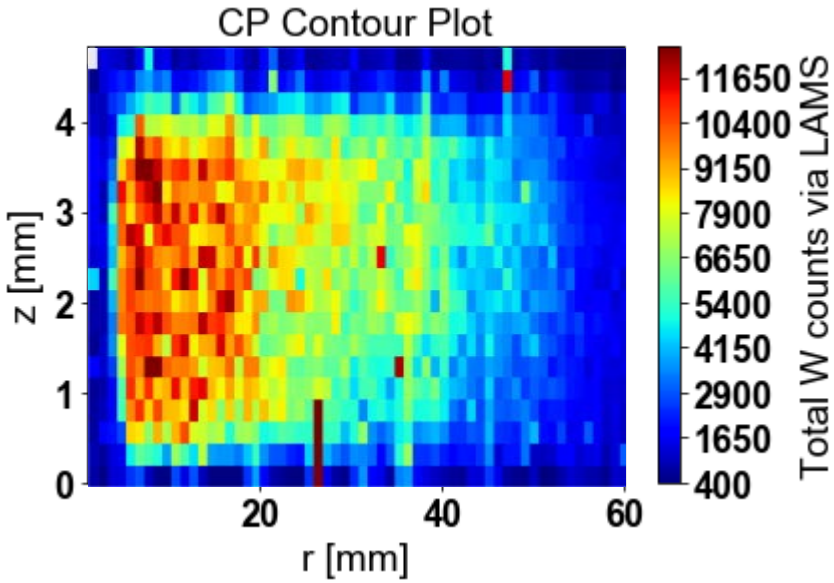

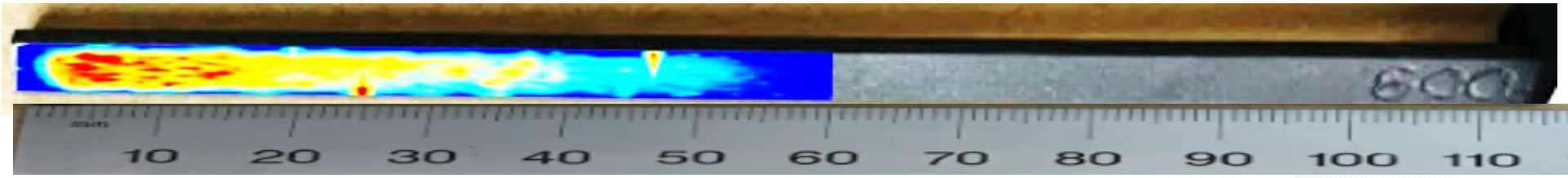

Donovan, et. al.; Review of Scientific Instruments (Vol.89, Issue 10)

Slide adapted from Jonah Duran
University of Tennessee

Problems with Thin Films of Isotopic Enriched Materials

- Isotopes are very limited availability and high value ($1-$20K/mg and could require multimillion $ campaign to make more)
- Most semiconductor coating instruments use low value materials (Au = 3.8¢/mg, Pt = 2.6¢/mg, Rh =8.3¢/mg)
- Golden era of nuclear physics fundamentals
  - Expertise
  - High demand specialized equipment
  - Lax environmental standards
- Modern capital equipment budgets purchase semiconductor instruments for thin films

Options for Thin Films

- Rolling foils
- Thermal evaporation
- Electron beam evaporation
- CVD, ALD, MBE
- Laser ablation deposition, laser induced forward deposition
- Electrochemical deposition
- Sputtering

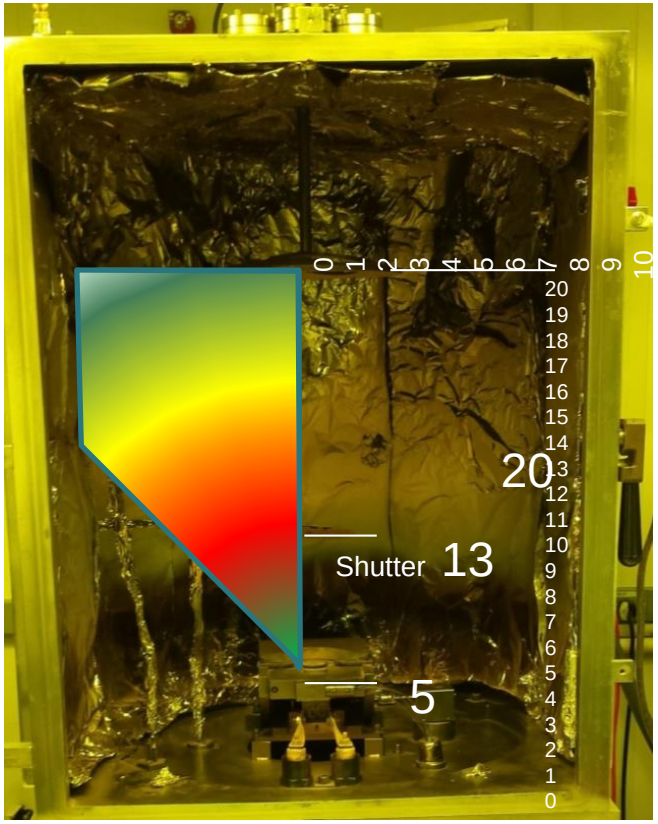

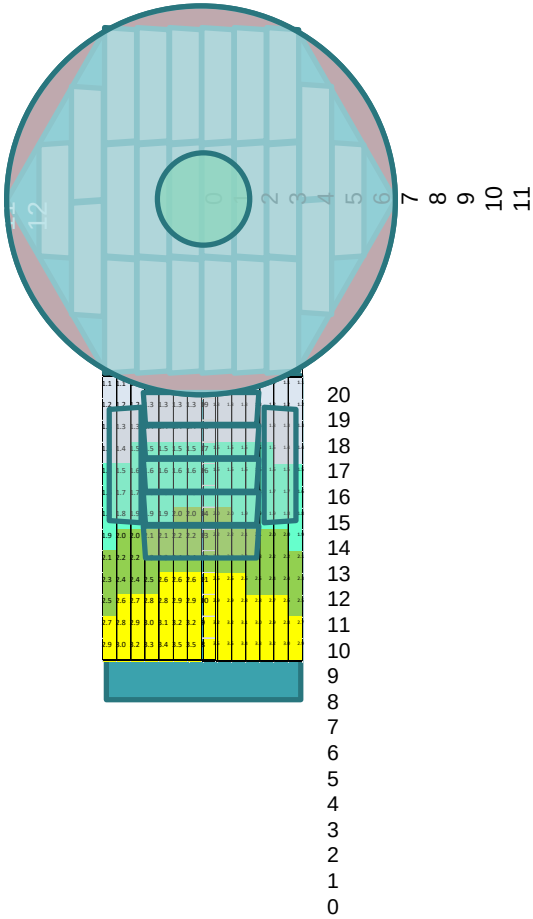

Concept for Ion Beam Sputter Deposition Tool

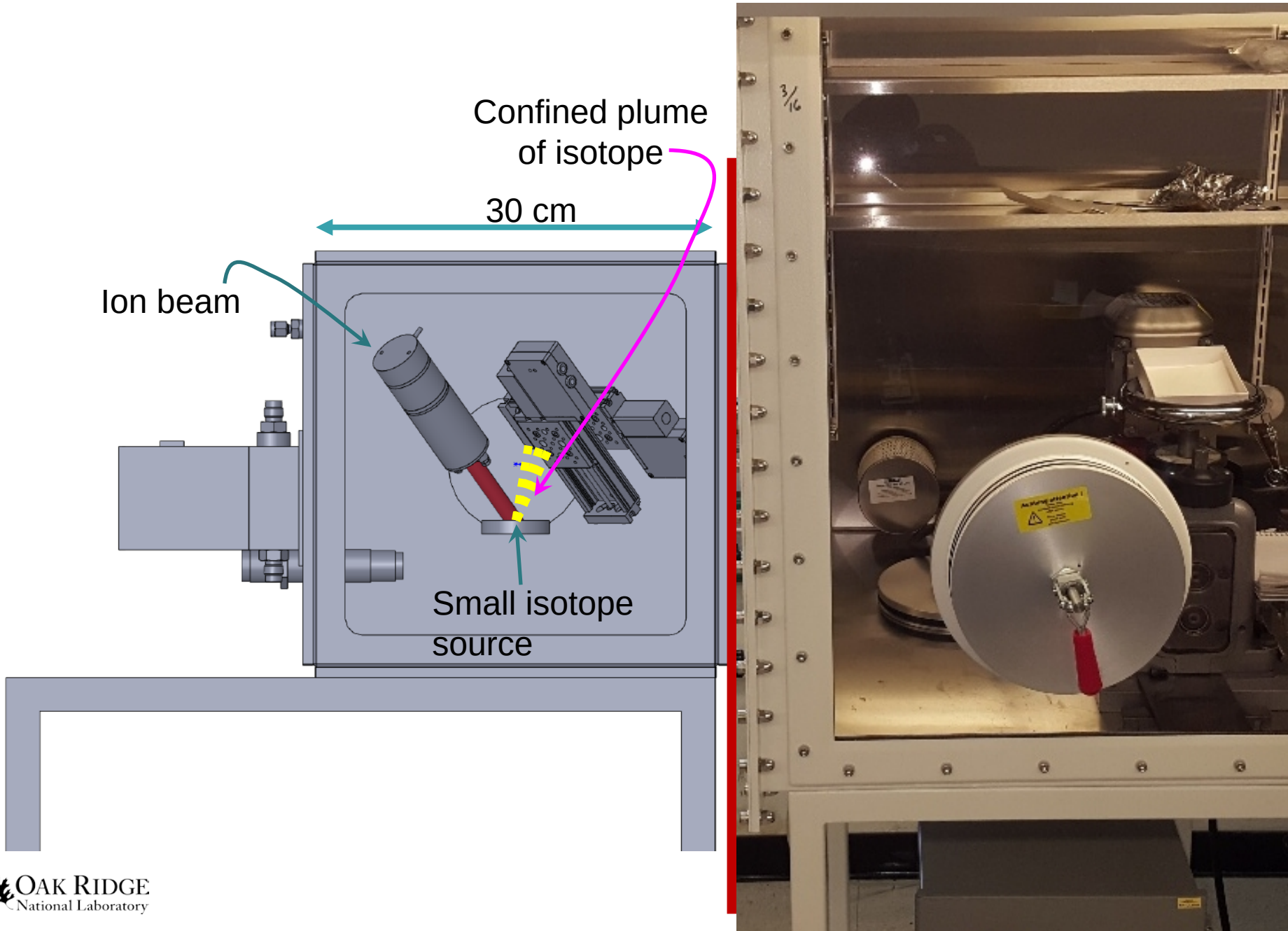

Ion Beam Sputter Deposition

- Kaufman & Robinson, Inc. KDC10 Ion Source
- 100-1200eV
- 0.5-4 sccm Ar or Xe
- Under 1 cm focused beam
- 10mA @ 600eV continuous

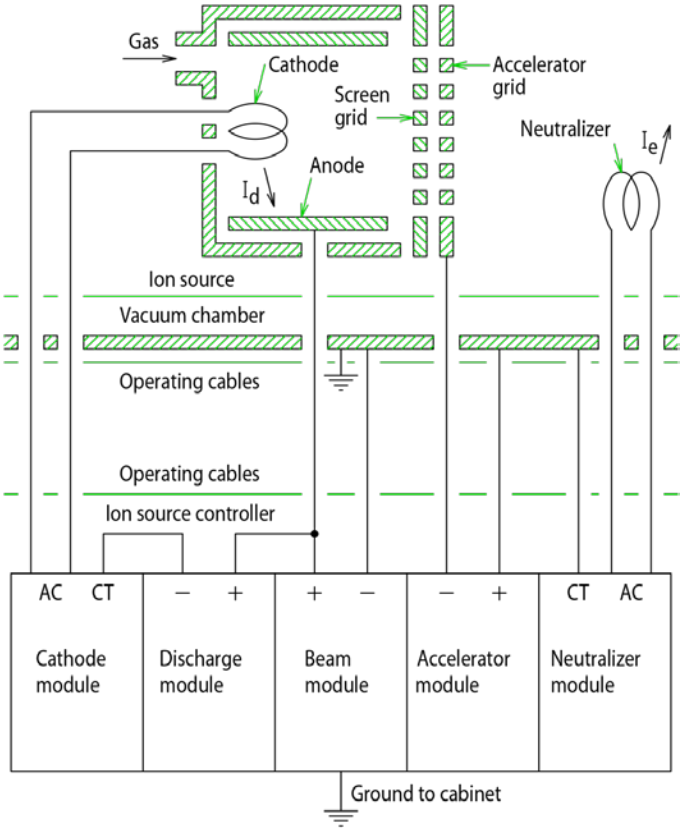

Concept to Reality

Delivered September 26, 2018

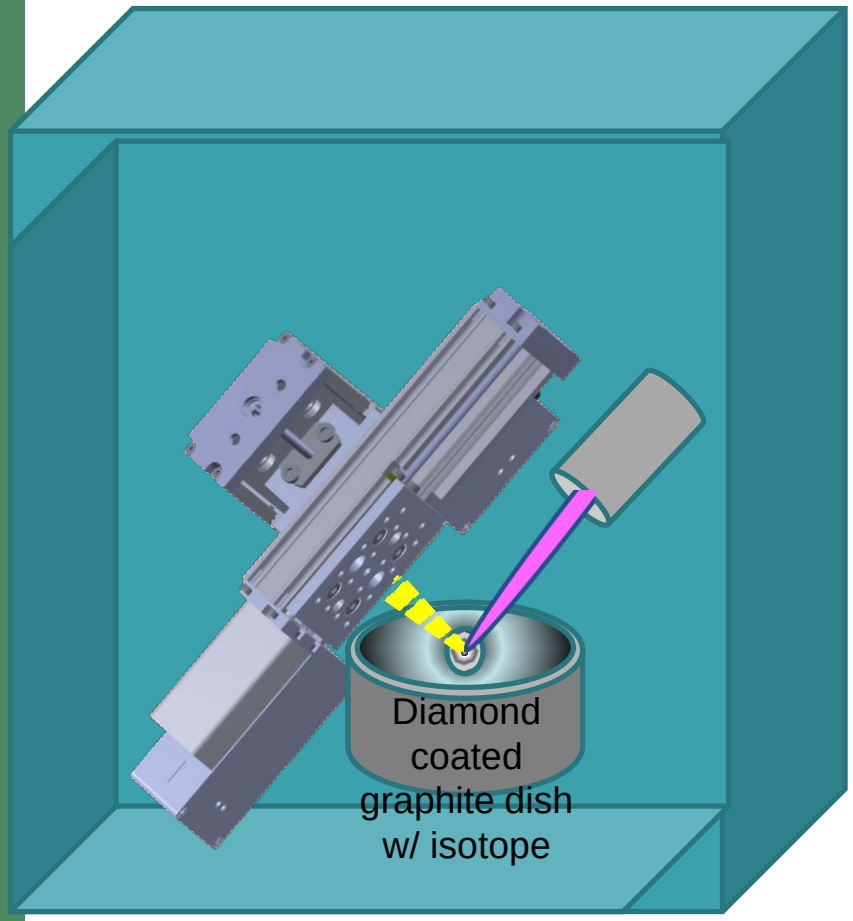

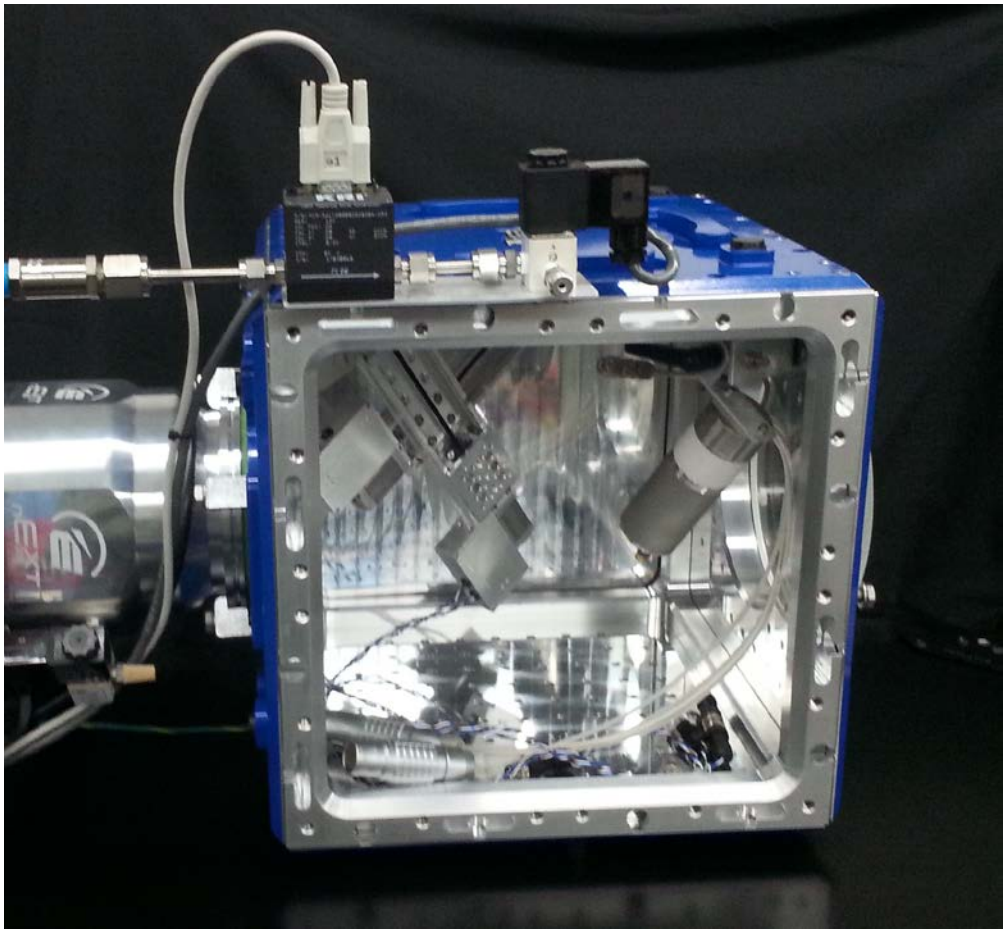

Graphite Source Holder

- Graphite sputtering threshold = 323eV
  - Xe^+ ions, -30° to ⊥ incidence, 1 mA/cm^2
- Metals are 9eV-92eV range
- Sub-threshold sputtering range will allow absence of C into sputtered films.

Material	Threshold (eV)	Etch rate at 300 eV ion energy (Å/min)	Etch rate at 1200 eV ion energy (Å/min)
Si	92	120	800
Ti	61	180	840
Ru	47	290	1100
Y	33	500	1700
Nd	18	1400	3800
Pb	9	3200	7800
C	323	0	96

M.P. Seah, *Nuclear Instruments and Methods in Physics Research B*, 229 (2005), pp 348-358.

8.9 mg flake of Ru-102 on graphite pedestal

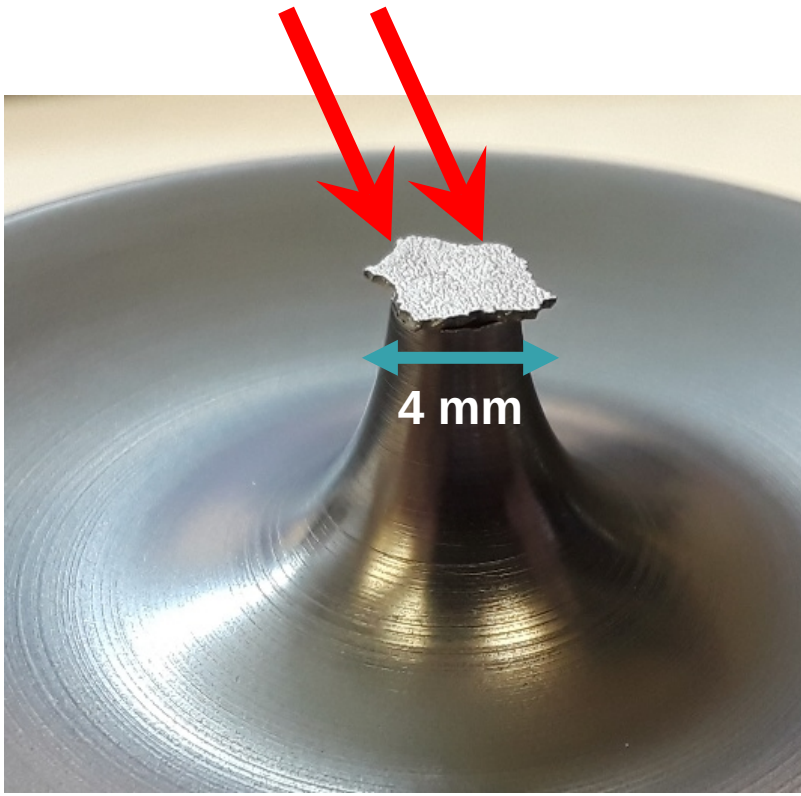

Energy and Angular Dependent Plume of Sputtered Atoms

- Two contributions to sputtered plume
  - Isotropic (randomization by multiple scattering)
  - Non-isotropic (carries more of the ion momentum)
- High energy causes random scatter to beam
- Keeping target close to source and rastering should be high efficient, localized and captured by target or capture substrate

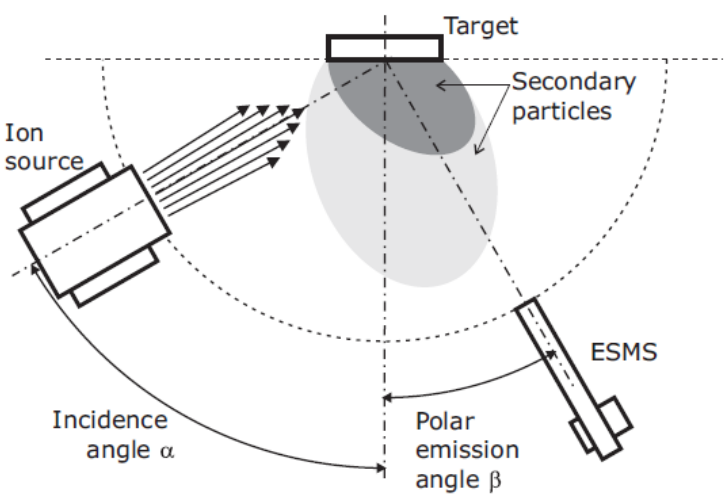

Fig. 1. Sketch of the experimental setup.

Study on polycrystalline Ti

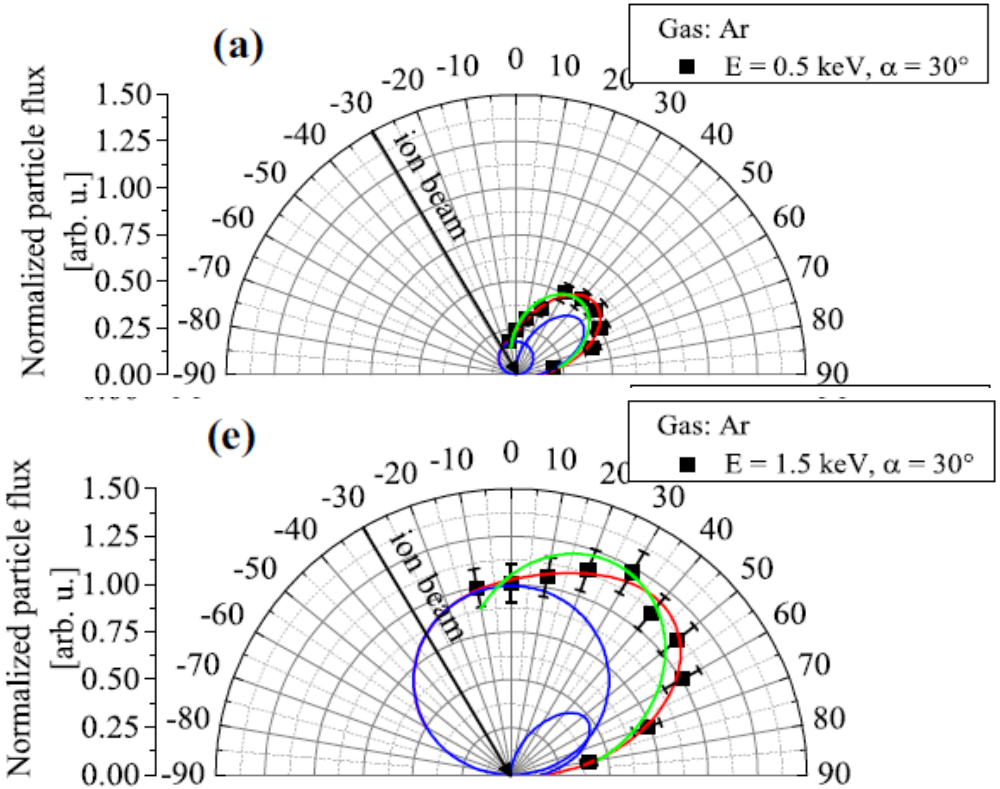

T. Lautenschläger et al. / Nuclear Instruments and Methods in Physics Research B 385 (2016) 30–39

New tool to allow:

Nanometer to 10 micron films

Air sensitive

- Li
- Ca
- Ba
- Sr

Refractory metals

- W
- Ti
- Ta
- Mo

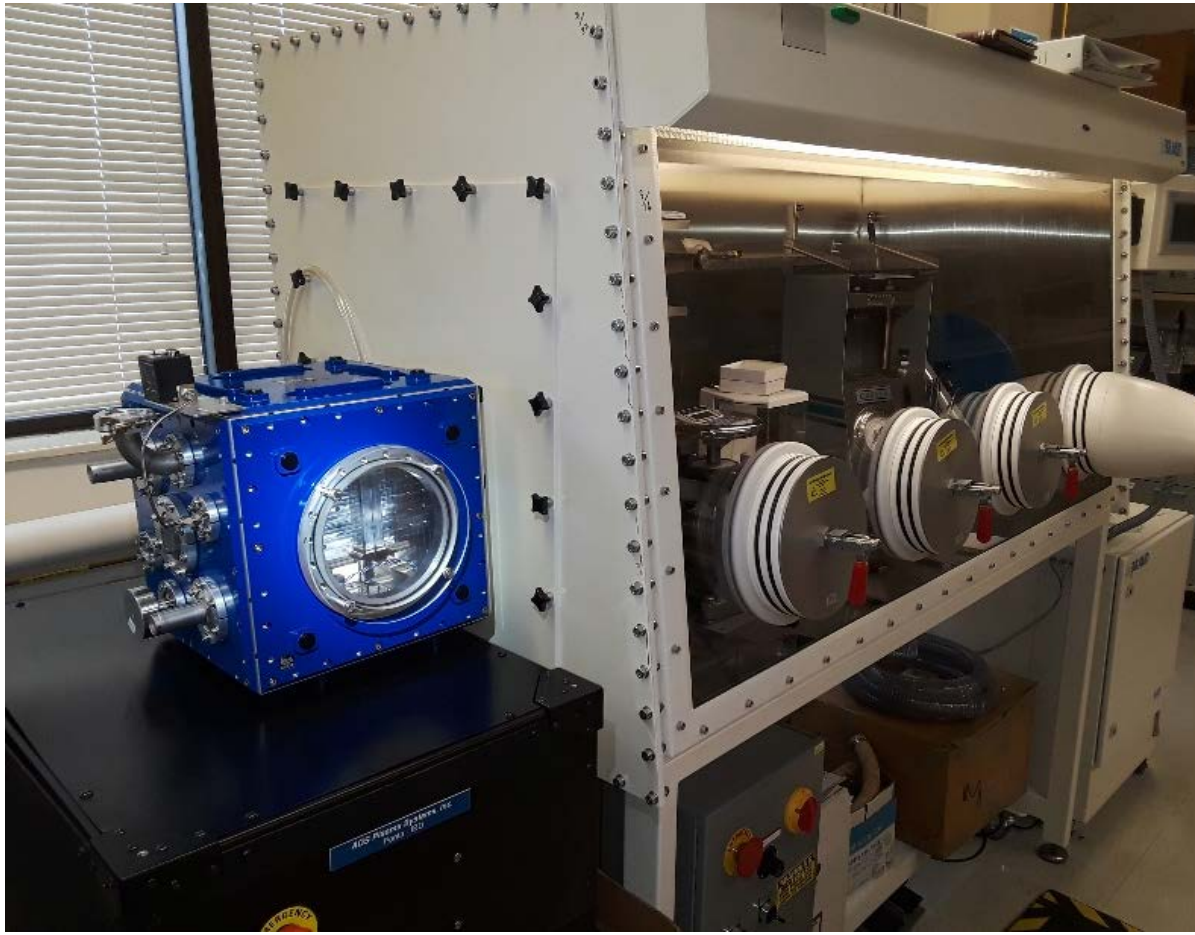

Most any other enriched isotopic material
(excluded for now are As, Se, Te, Cd, Zn and naturally occurring radioactive materials)

- Low loss (50-95% efficient vs. 1-5% using thermal, CVD or e-beam)

Transfer in <1ppm O_2 / H_2O
Evacuate to 10^{-7} Torr for indefinite storage

Going forward: How Can I Help? What is the Next Project?

Group IA	IIA	IIIB	IVB	VB	VIB	VIIB	VIII		IB	IIB	IIIA	IVA	VA	VIA	VIIA	Inert Gases
H																He 1
Li 2	Be 1										B 2	C 2	N 1	O 2	F	Ne 1
Na 1	Mg 3										Al 1	Si 3	P	S 4	Cl 2	Ar 2
K 3	Ca 6	Sc	Ti 5	V 2	Cr 4	Mn	Fe 4	Co 1	Ni 5	Cu 2	Zn 5	Ga 2	Ge 5	As 2	Se 6	Br 2	Kr 5
Rb 2	Sr 4	Y 2	Zr 5	Nb	Mo 7	Tc 3	Ru 7	Rh	Pd 6	Ag 2	Cd 8	In 2	Sn 10	Sb 2	Te 8	I	Xe 6
Cs	Ba 7	La† 2	Hf 6	Ta 2	W 5	Re 2	Os 7	Ir 2	Pt 6	Au 1	Hg 7	Tl 2	Pb 4	Bi 1	Po 1	At 1	Rn
Fr	Ra 3	Ac‡ 2														

†	Ce 4	Pr	Nd 7	Pm	Sm 7	Eu 2	Gd 7	Tb	Dy 7	Ho 2	Er 6	Tm	Yb 7	Lu 2
‡	Th 2	Pa	U 5	Np 2	Pu 6	Am 2	Cm 4	Bk 1	Cf 2	Es	Fm	Md	No	Lr

Solve challenging problems Isotopes.gov

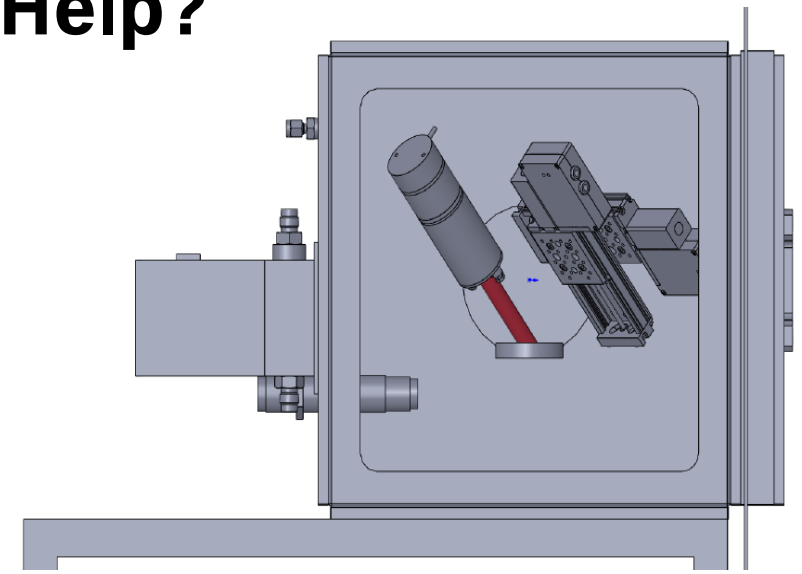

New ion beam sputter tool for efficient deposition

Our new laser ablation tool for mapping isotopic abundance

This material is based upon work supported by the U.S. Department of Energy, Office of Science, Office of Nuclear Physics under contract number DE-AC05-00OR22725

Thanks to Kaufman and Robinson, Inc; AGS Plasma Systems, Inc;
ORNL Fusion, Nuclear Science and Isotope Technology, and Physics Divisions

Thanks to Fusion, Medical Isotopes, and Cf-252 Groups