RF Module Integration

Colin Whyte
University of Strathclyde
on behalf of the MICE collaboration

Outline

Interfaces

- High power RF co-axial lines
- Vacuum
  - Window protection
  - Vacuum volume dimensions and pumping
- Temperature - control
- Cavity tuning – air
- Connections to magnets
  - Bellows
  - Flange bolt pattern
  - Quench force
- Sliding platforms
- Clean room
  - End flanges

Controls and Monitoring

- Interlocks
  - RF Power amplifiers
  - Vacuum
  - Temperature – independent
- Cavity tuning – LabView
- LLRF – offline test
- Muon Timing

Safety

- Ionising radiation
- High voltage for RF amplifiers

Demonstration of Ionisation Cooling

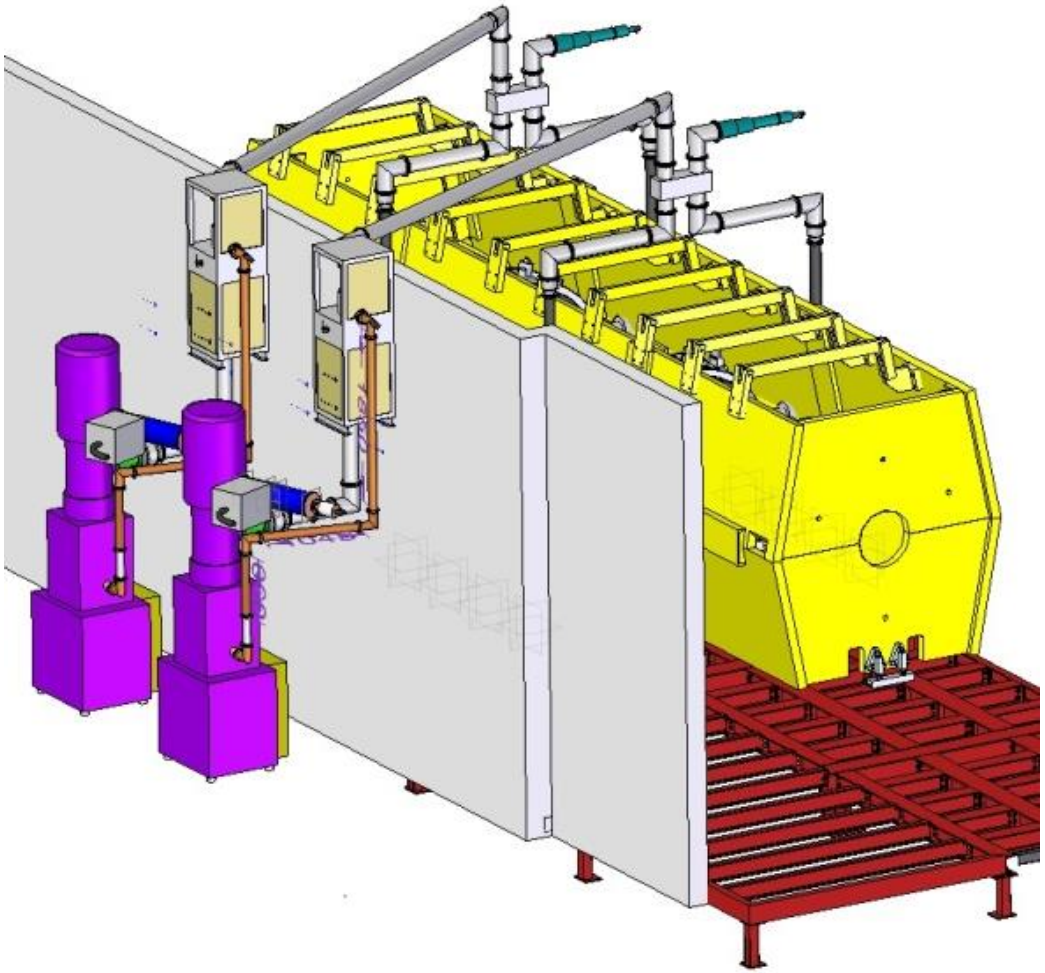

- RF power transmission overhead
- SF6 filled co-ax lines
- Relatively easily de-mountable

RF Power

- Simplified distribution network- overhead
- Off-centre mounting of hybrid takes up phase shift
- Minimised length of 4” line- minimises losses

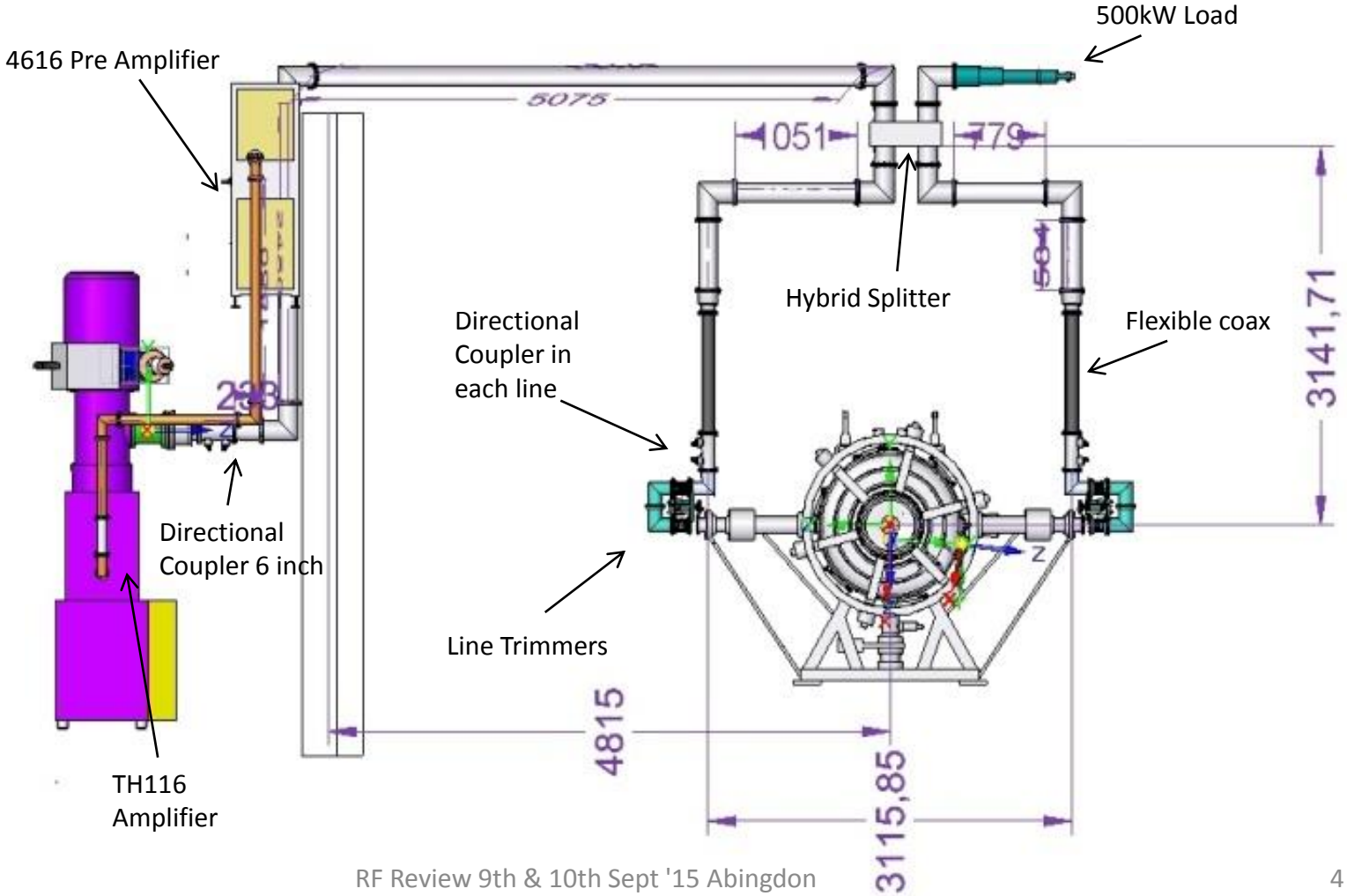

Co-axial line support

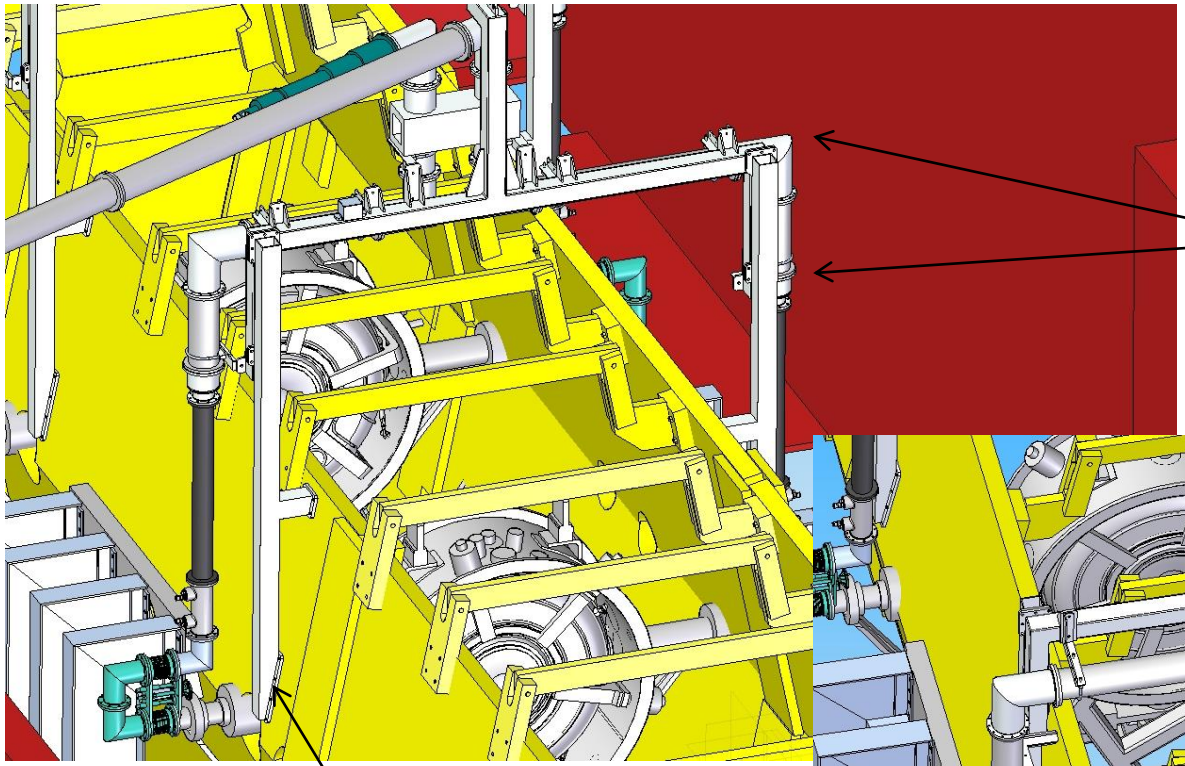

Coax support structure

- Fasten Coax support frame to uprights

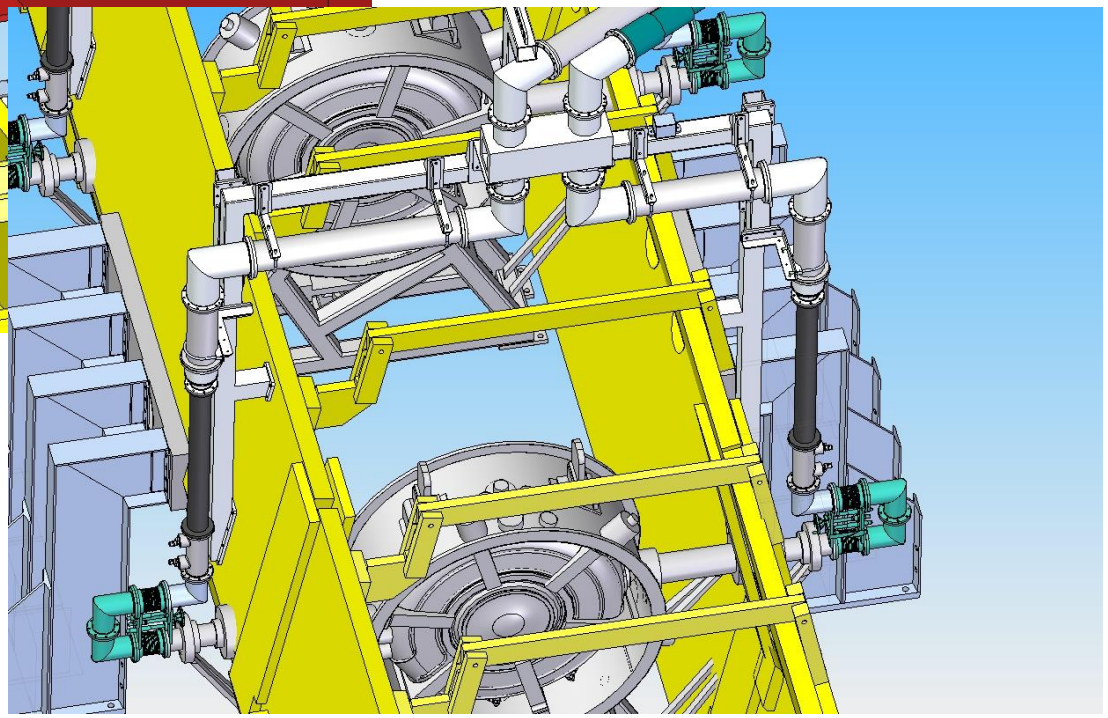

- Drill and tap PRY for 2 off vertical upright supports
- Steve Plate & Holger don't see this as a problem

Offline support frame

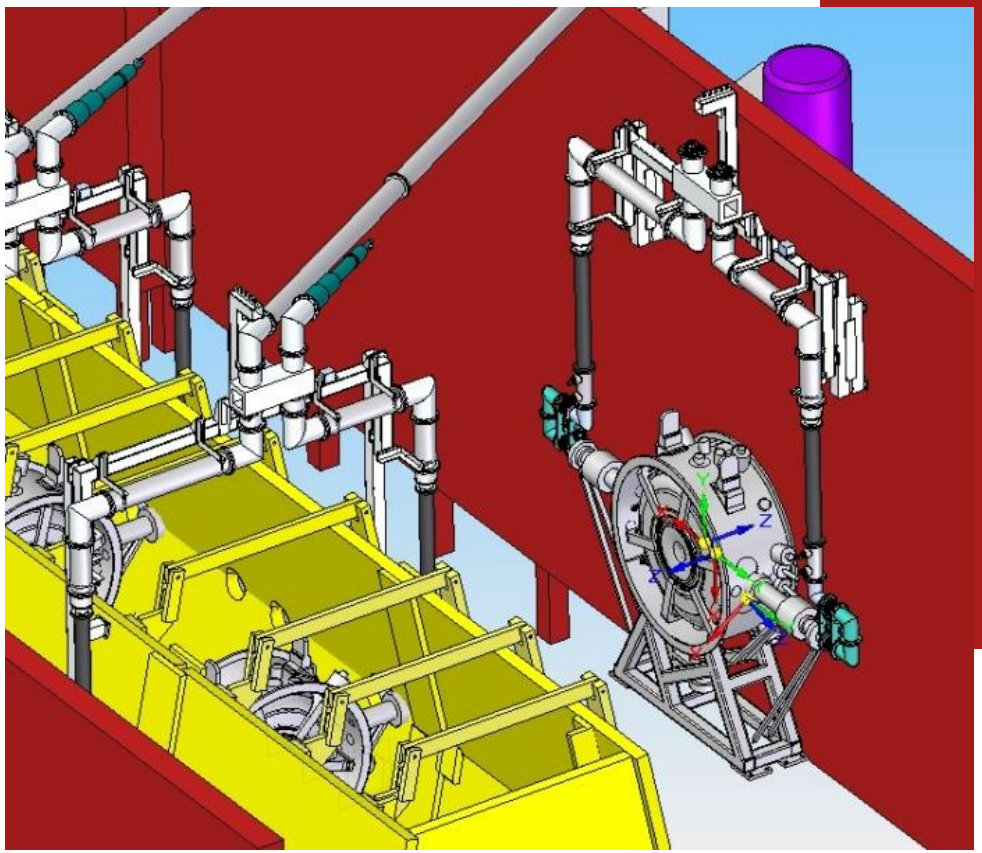

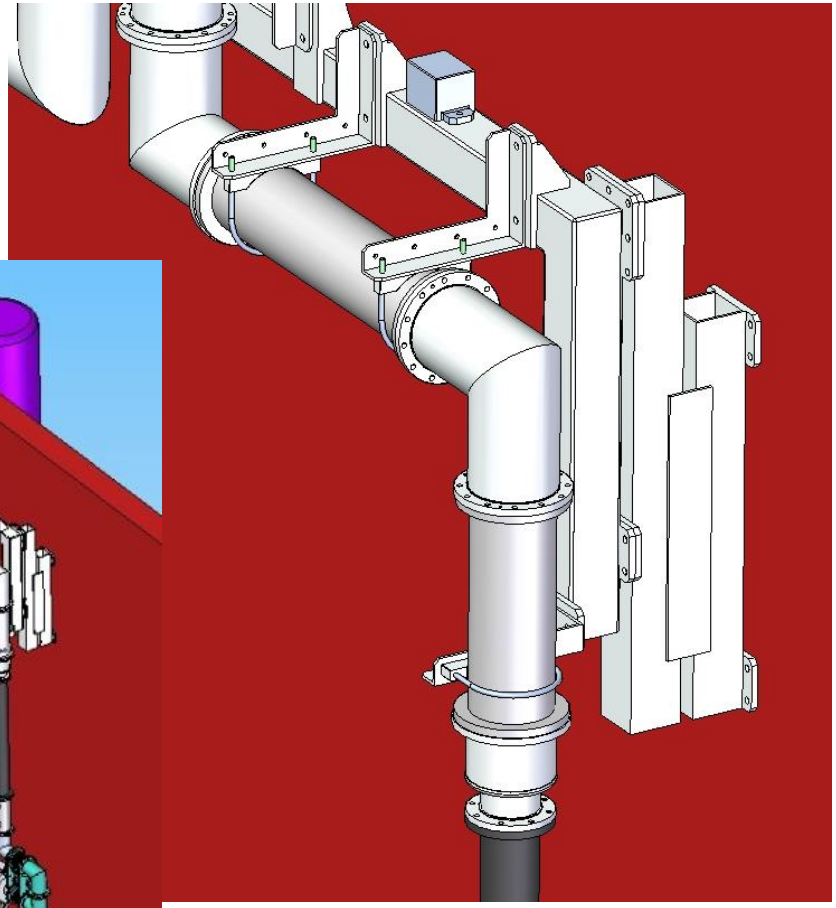

RF MODULE Co-Axial line trimmer supports

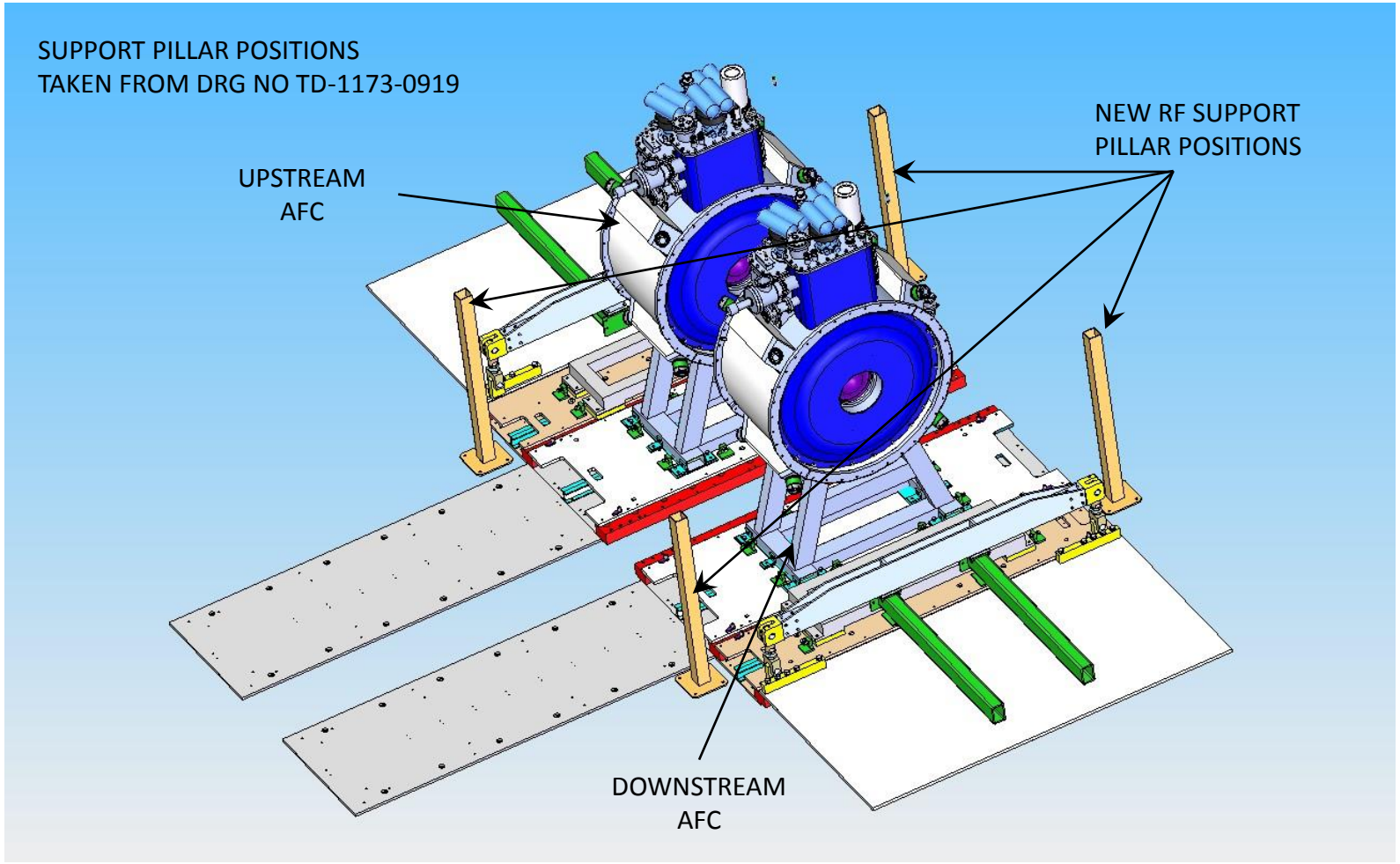

RF module vacuum

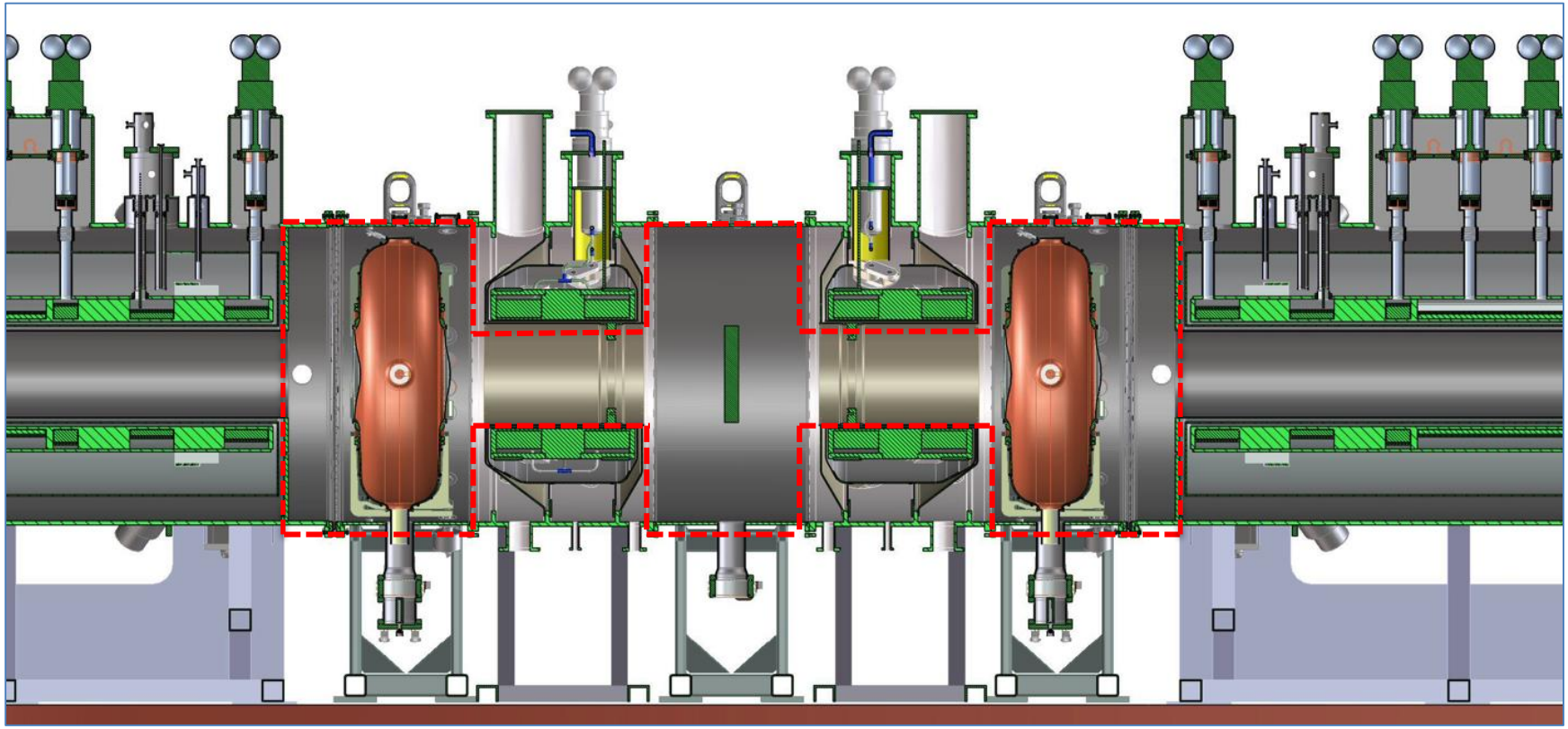

Large, complicated vacuum volume – 2 large turbo-pumps mounted to central spool, located behind south side of PRY with large bore pump path
Note T Anderson talk on Be window protection.

Cavity temperature

Temperature stabilisation system with heater, cold water and mixing valve control by high resolution process controller that self learns

- Cavity on frequency at 36.5 degrees
- Water flow rates on cavity restricted due to small cooling pipes
- 0.05 degrees cavity temperature stability can be achieved
- RF trips result in cavity detuning which can again take 5 minutes to recover from
- RF is always applied at effectively maximum

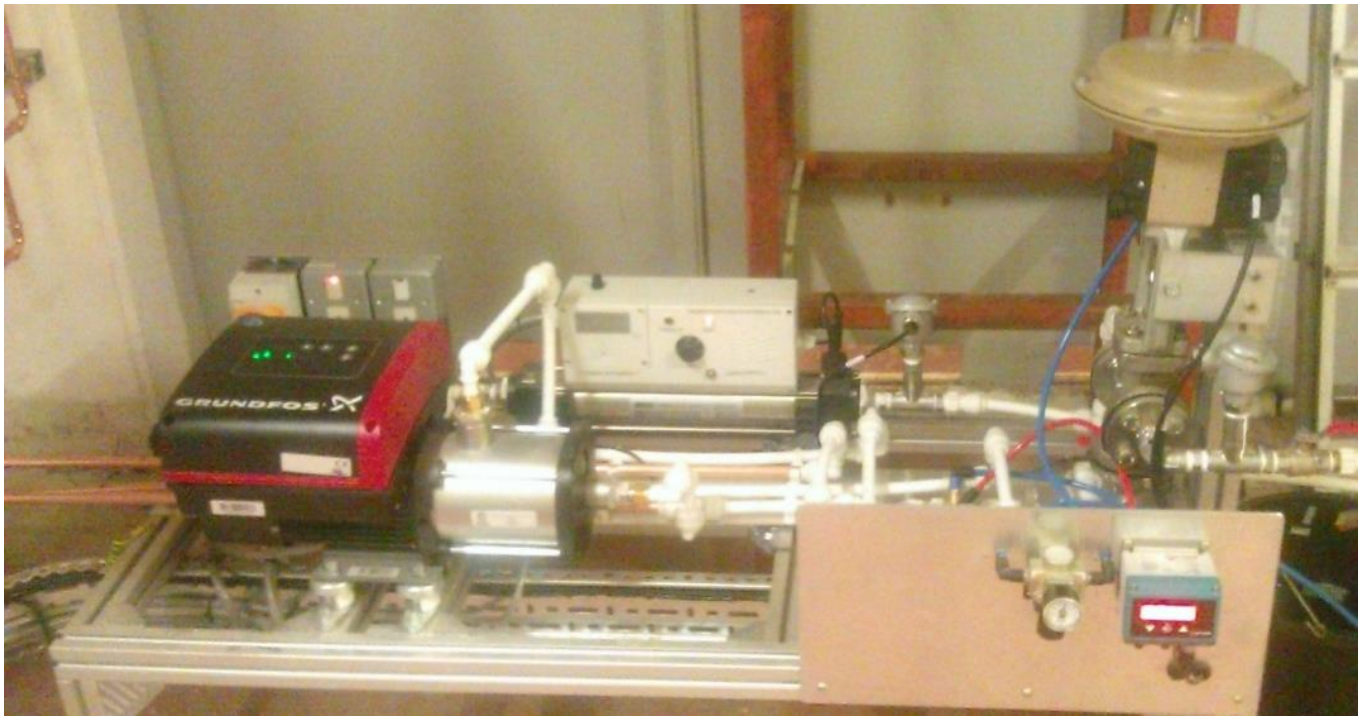

MTA Cavity results

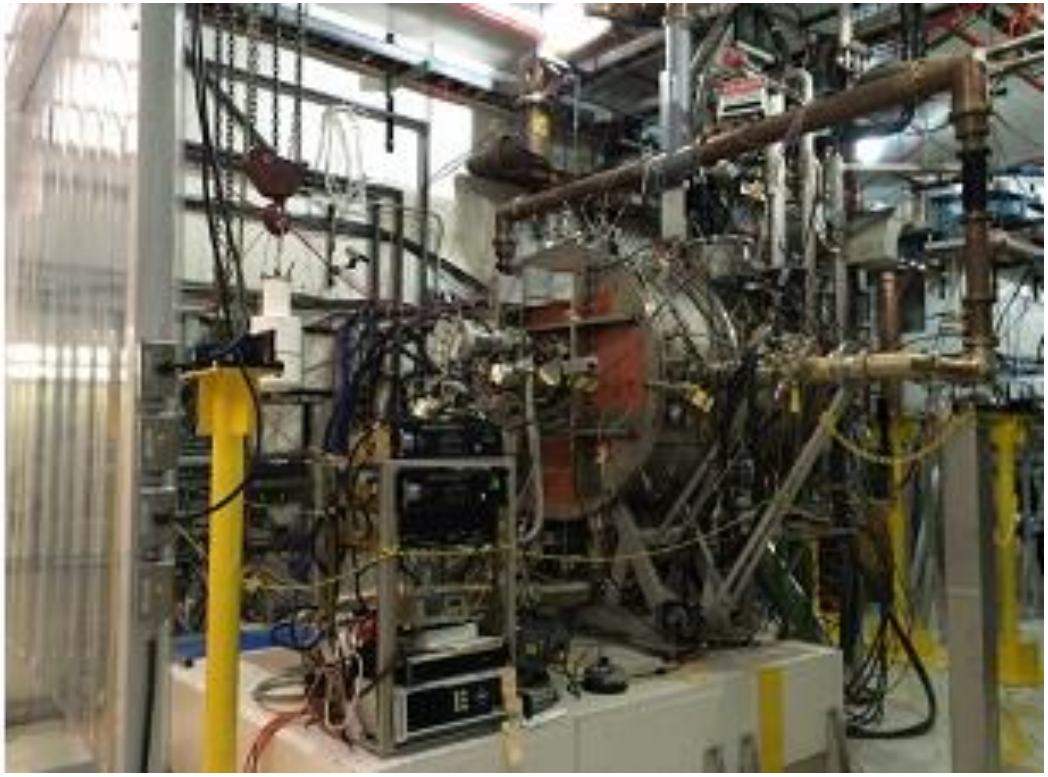

B=0

0.5M+ pulses at >11MV/m
14MV/m for short periods.
No evidence of breakdown

B=5T

>7.5M pulses

- 1M @ 8MV/m
- 3M @ 10.7-11.2MV/m
- 1.3M @ 13-13.7MV/m
- 0.36M @ 13.8-14.5MV/m

No breakdown below ~14MV/m

Cavity Tuning

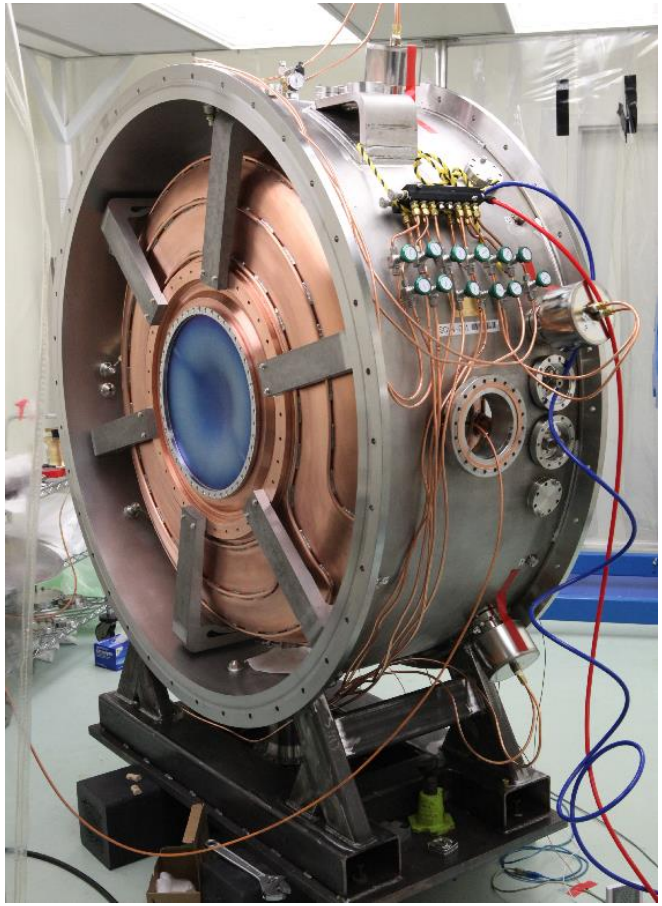

0.5M pulses
5Hz, B=5T, 1.6MW (10.3MV/m)
1.4kW ave, 1Hz update interval

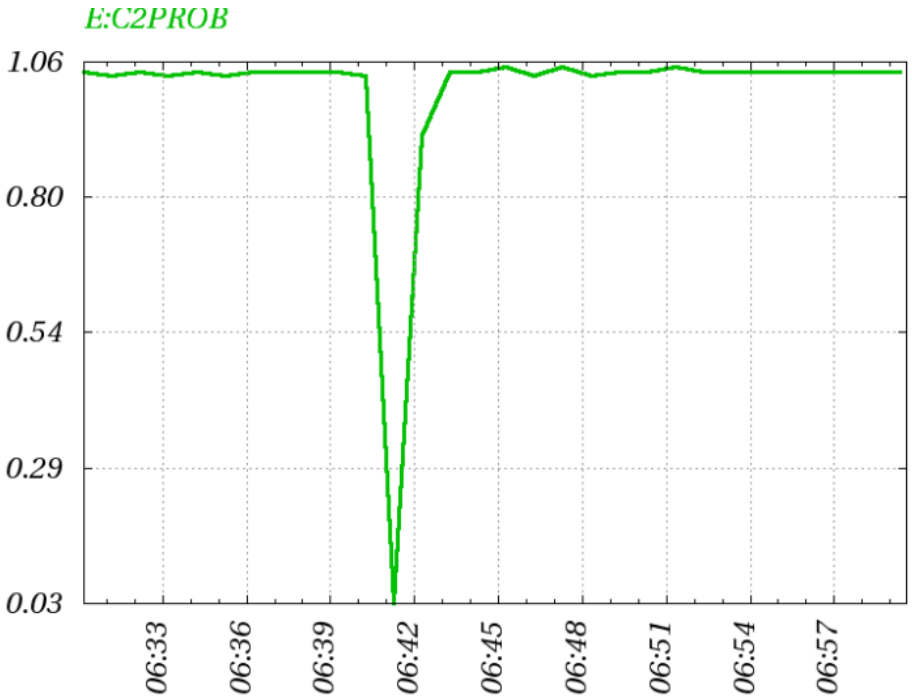

Vacuum connections

692.15mm OD x 539.75mm ID nested bellows :

Extended length 66mm
Closed length 14mm
Stroke 52mm
nom free length 40mm
Axial stiffness 200N/mm.
316L, 0.91mm thk.
End terminals: 316.

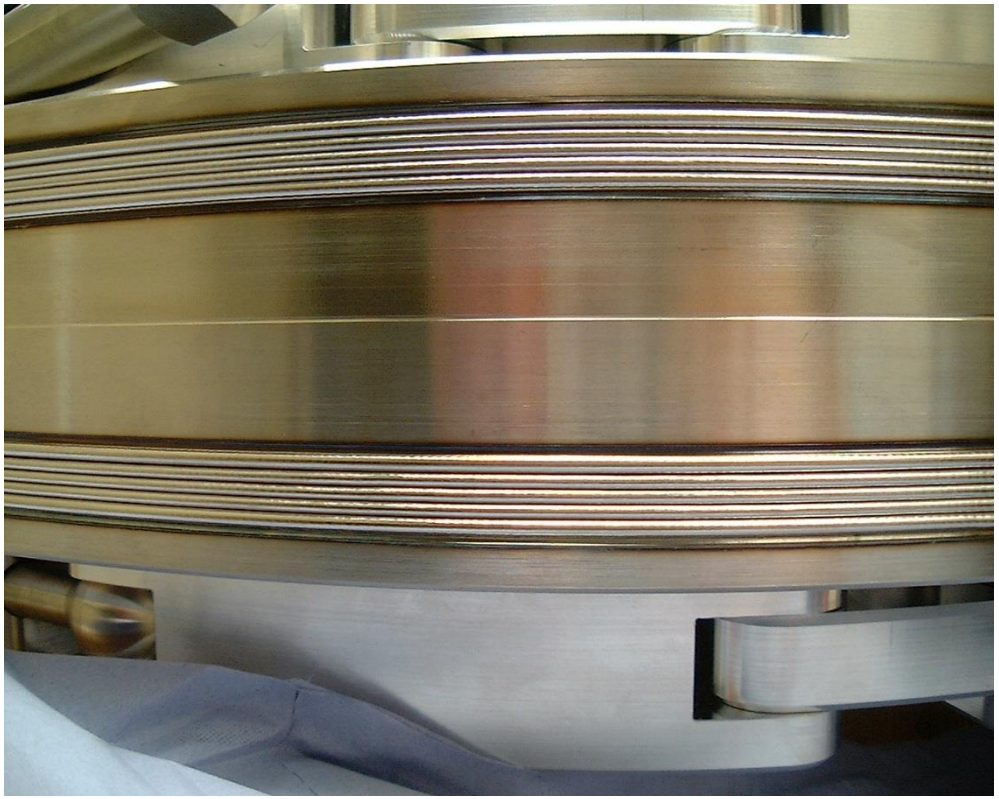

Quench Forces

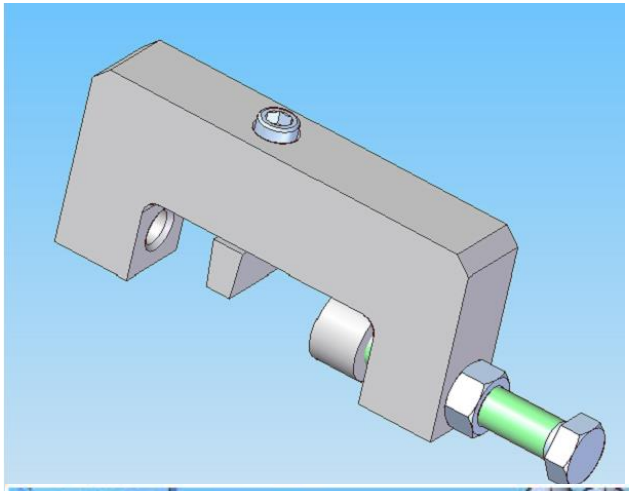

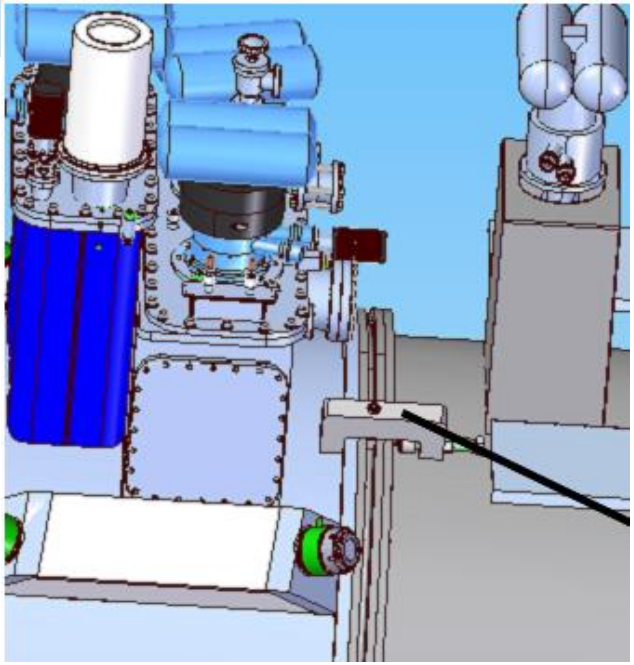

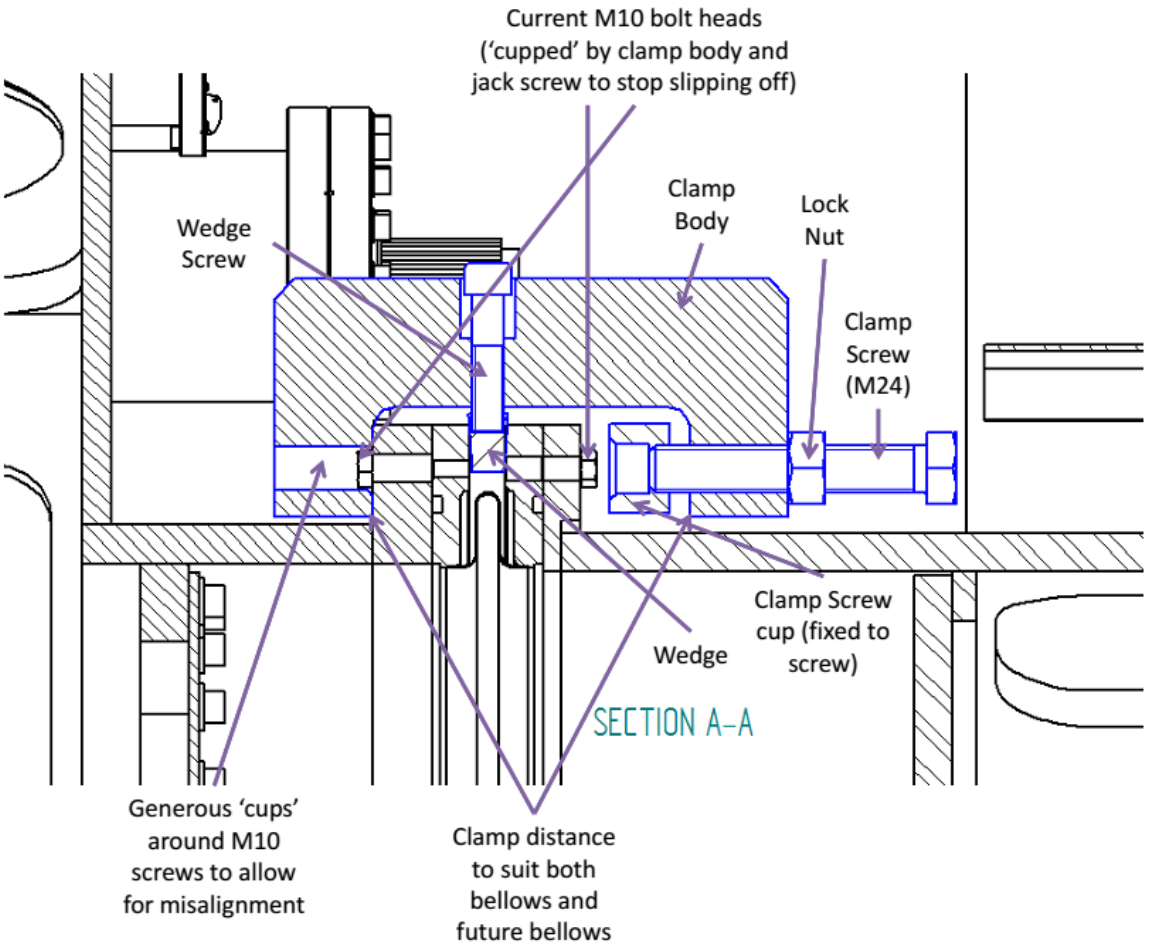

RF CAVITY MODULE MOVING PLATFORM
(TOP VIEW)

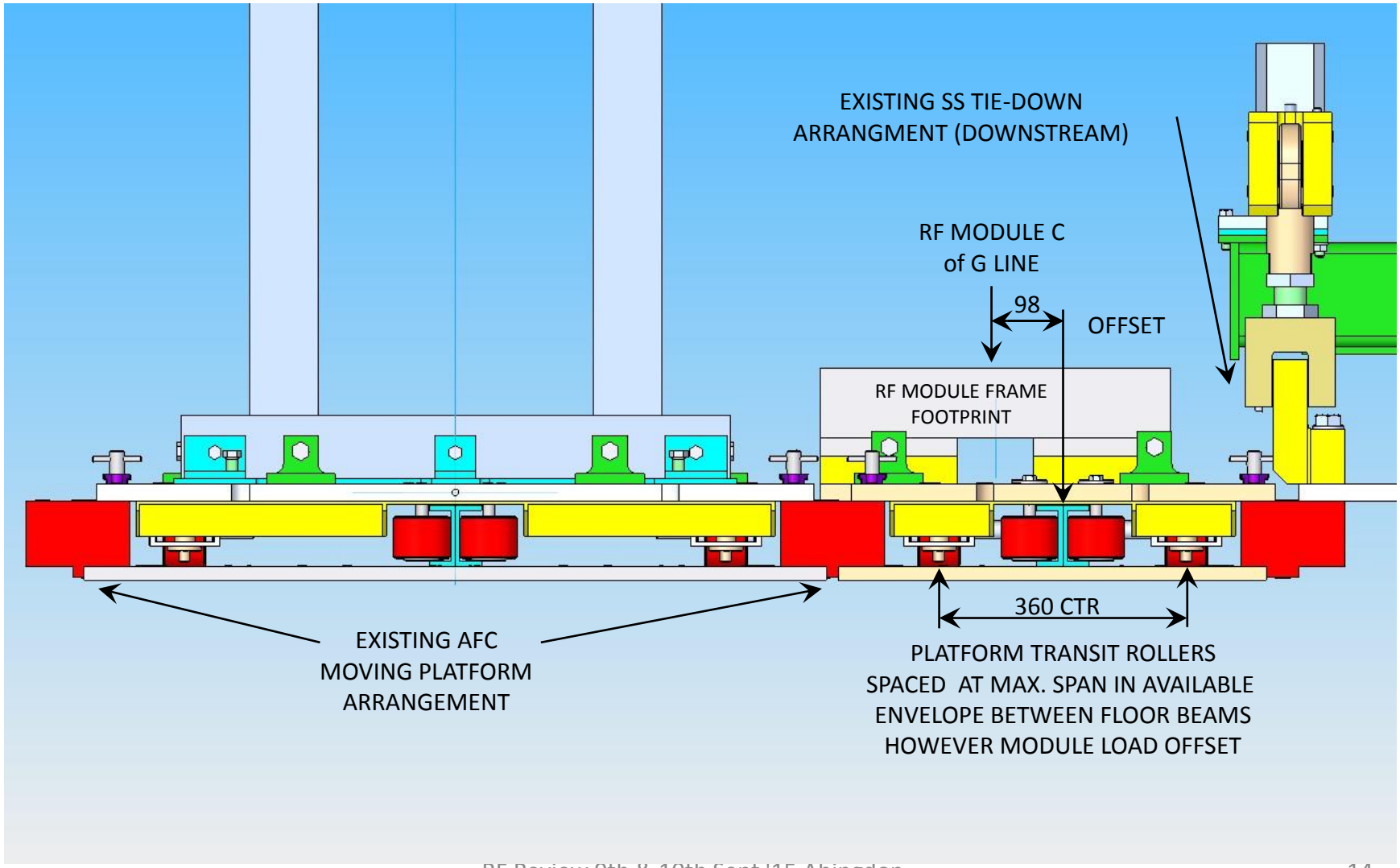

RF CAVITY MODULE MOVING PLATFORM ARRANGEMENT OPTIONS (TOP VIEW)

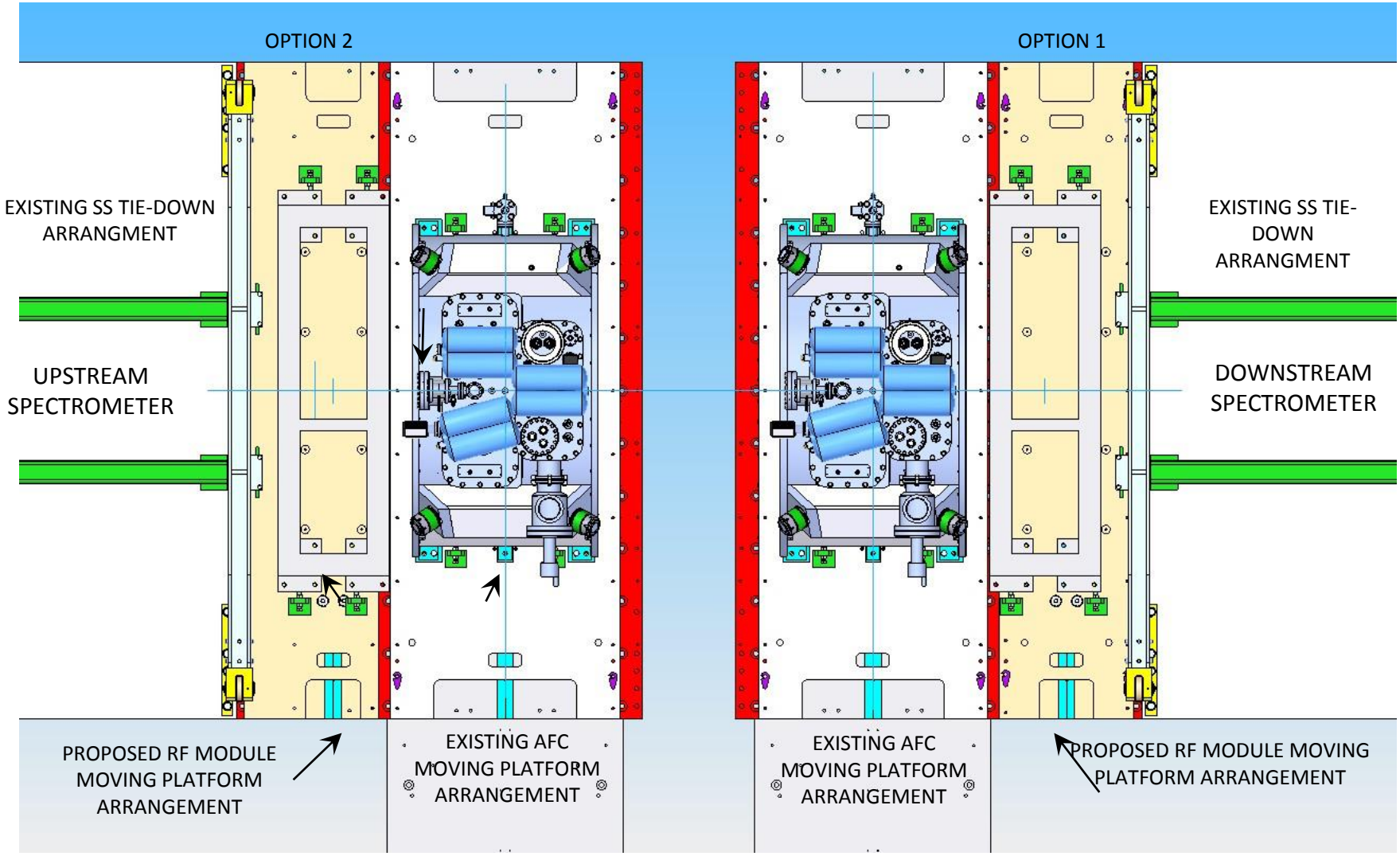

Cooling Demonstration

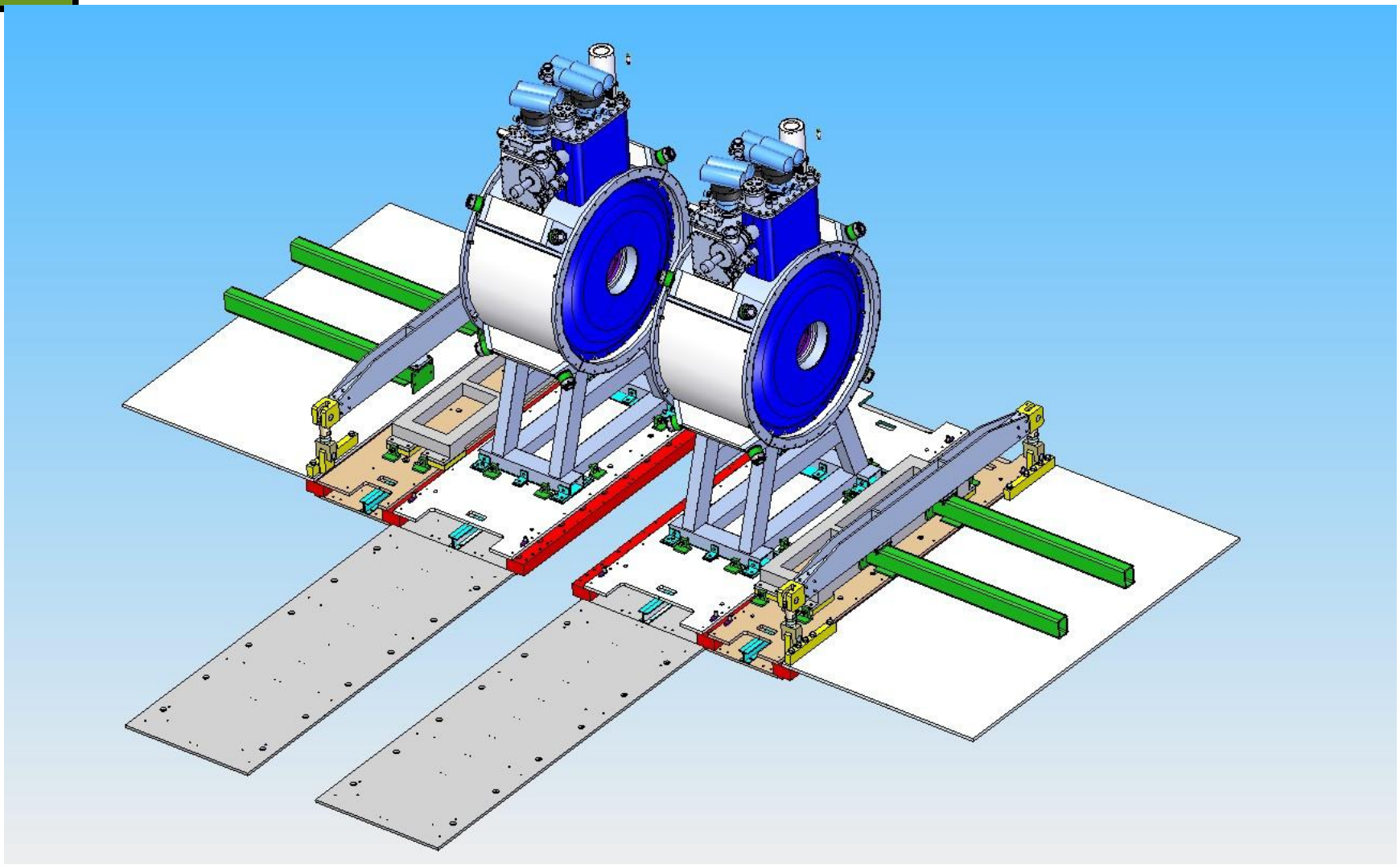

Partial Return Yoke (PRY)

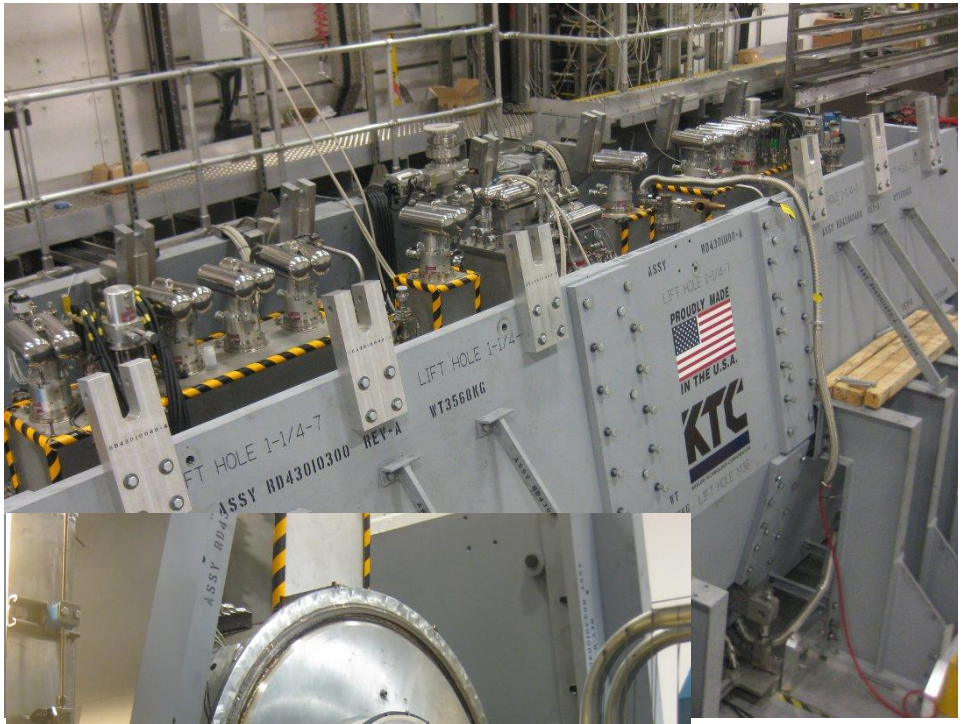

Flux return path to protect sensitive equipment from fringe field of magnet chain.

- 100mm thick soft iron plate
- Step IV PRY re-used and extended for cooling demonstration.
- Extension also made in the USA, drawings complete, ready to go to contract.
- New, extended support structure made in UK.
- New floor fixings required

RF Module End Plates

RF Module end plates are heavy, 3-400kg. Require hoist/frame in clean room. Cannot flow significant clean gas to preserve cleanliness because of fragile windows. Replace Vac flanges with thin/light 'clean' plates which allow insertion into beamline.
Build structure around magnets and fit to clean room extension.

RF system overall control

- State machine control
- RF measurements
- Important vacuum /voltage/ temperature parameters
- Interlock status and trips
- Illustration shows the main operator panel for ALICE
- more in-depth control pages are clickable from this main screen

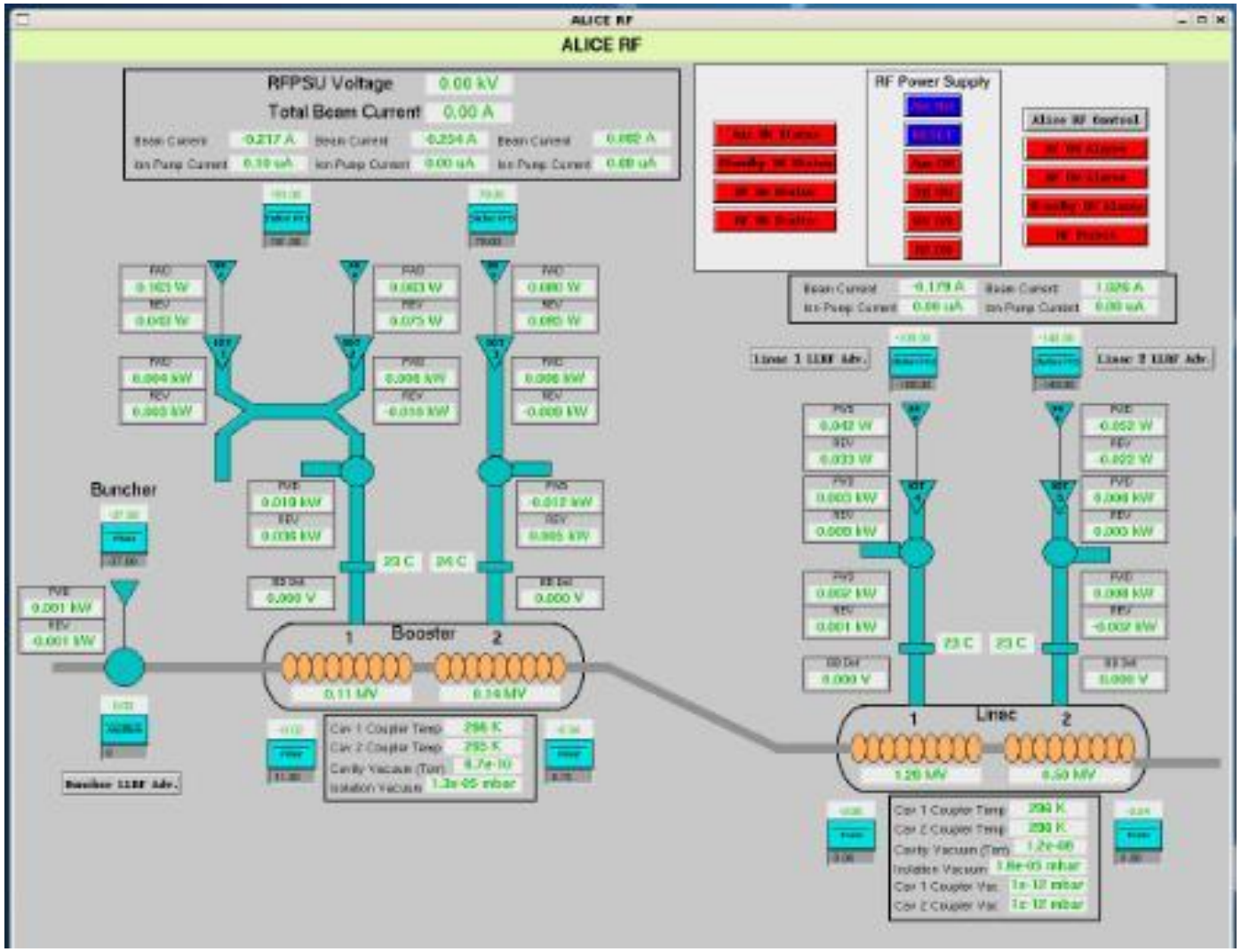

Off-line Testing

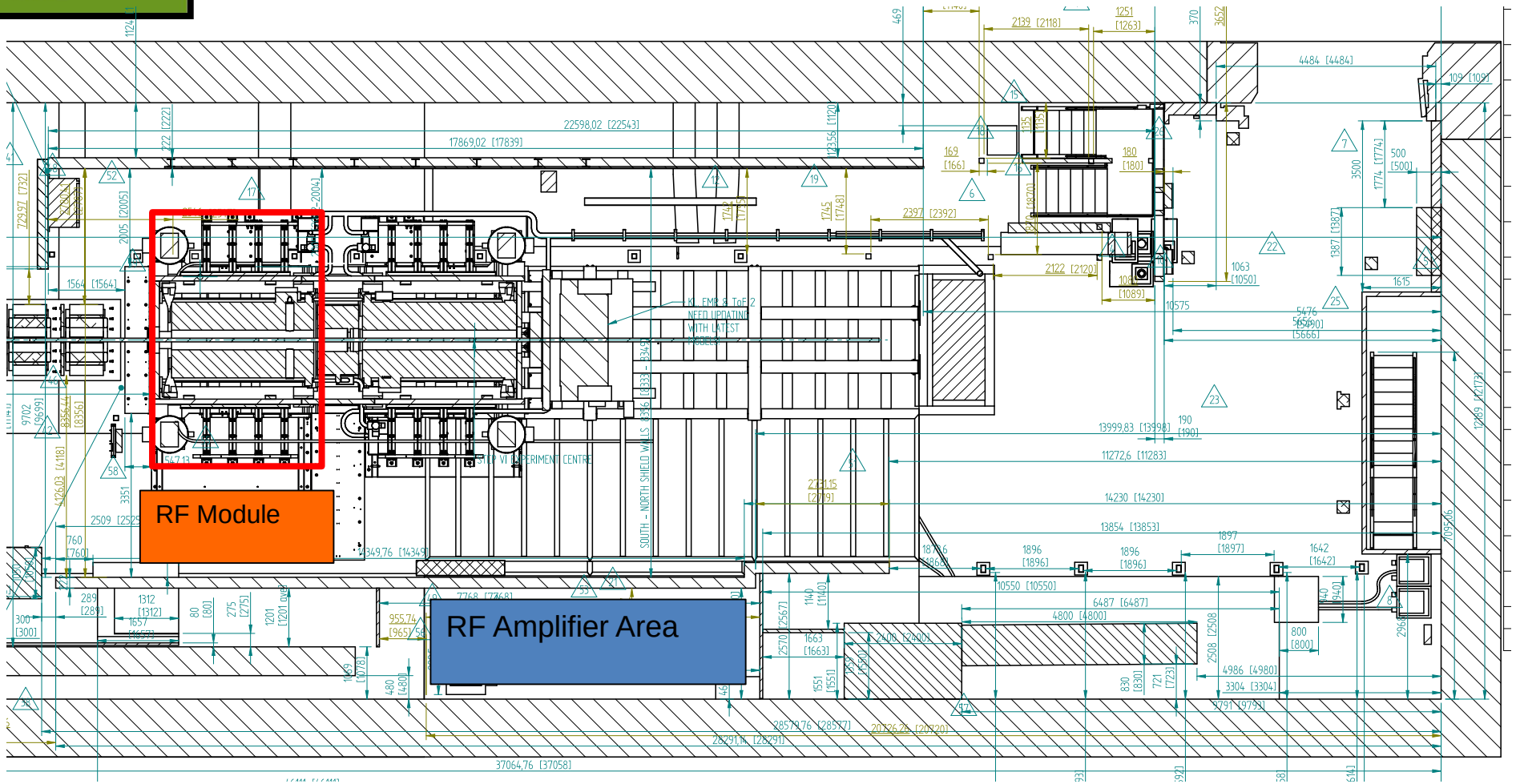

Cooling Demonstration

Installation start 1st June 2016.
2 RF cavities, 2 secondary absorbers bracketing main absorber

- 2 x 2MW 201MHz amplifier chains – UK
- RF infrastructure support - UK
- RF controls and monitoring – UK
- Muon phase determination - UK

- Extended Partial Return Yoke – USA
- 2 x 201MHz cavities - USA
  - Be windows
  - Tested in B field to 14MV/m

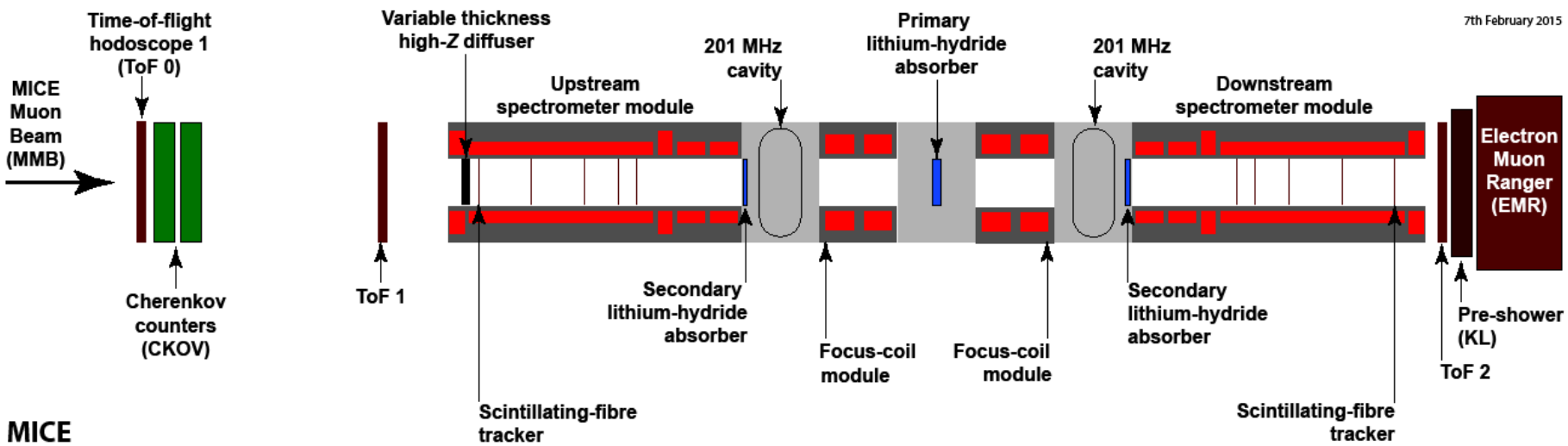

¡