Express my gratitude to DPF, to DOE for long-term support, & to my gifted collaborators for synergism & ingenuity in developing...

Directional Calorimetry

for massive detectors

...I cite those innovators in black & our undergrads in green.

The first massive calorimeter using Cherenkov rings...

DUMAND	1 km^3	Hawaii, off Big Island	1976

Prematurely killed by DC funding cuts,
precursor to Antares, IceCube, Km3net.

The pioneers:

IMB	10 kilotons = $(20m)^3$	under Lake Erie	1978
Kamiokande	3 kilotons	Kamioka Pb Mine	1980

The second-generation: IMB/Kamioka merge

Super-K	50 kilotons	New, bigger cavity	1992
K2K, then T2K		+ Beams from accelerators	1994

* year proposed

Seminal technology of morphed:
8 massive neutrino detectors,
in 7 countries,
on 4 continents...

	Neutrino source	Target	Note
K2K/T2K	KEK/Tokai accelerators	reverse osmosis water	to Super-K
Kamland	reactors	water, oil, scintillator	old K cavity
SNO, Sudbury	our sun	heavy water	$300M *vs* $4M IMB
Antares, off France	cosmic rays	Mediterranean water	2.4 km deep
IceCube, South Pole	cosmic rays	frozen water	1.5-2.5 km
Daya Bay, China	reactors	near & far	2 detectors
Reno, Korea	reactors	near & far	2 detectors
Km3net (FR&IT)	cosmic rays	2 seawater detectors	1 string operating

It all started at Fermilab, built to explore ν's...needs massive devices. First, a 100 Ton totally-active, liquid scintillator target-detector:

Experiment E1A

Directionality from segmentation, using internal reflection:
Teflon, n=1.35
vs oil n=1.5

'73: co-discovered deep-inelastic neutral currents.

Calorimeter: Gollin, Hanna, Kozanecki, Pete Myers, (Rubbia), Wesley Smith, Strait

Finer grained version: BNL 1974:

Discovery: $\nu_\mu p \rightarrow \nu_\mu p$ elastic scattering.

Target for first "long" baseline ν_μ oscillation.

Optimized Δ^{++} production of 100 MeV ν_μ
L/E = 1 km/GeV
(*vs.* 10 km/GeV, as we now know).

Nothing seen => need bigger L/E or mass.

Kozanecki, Mike Levi, LoSecco, Lenny Rivkin, Wesley, Strait

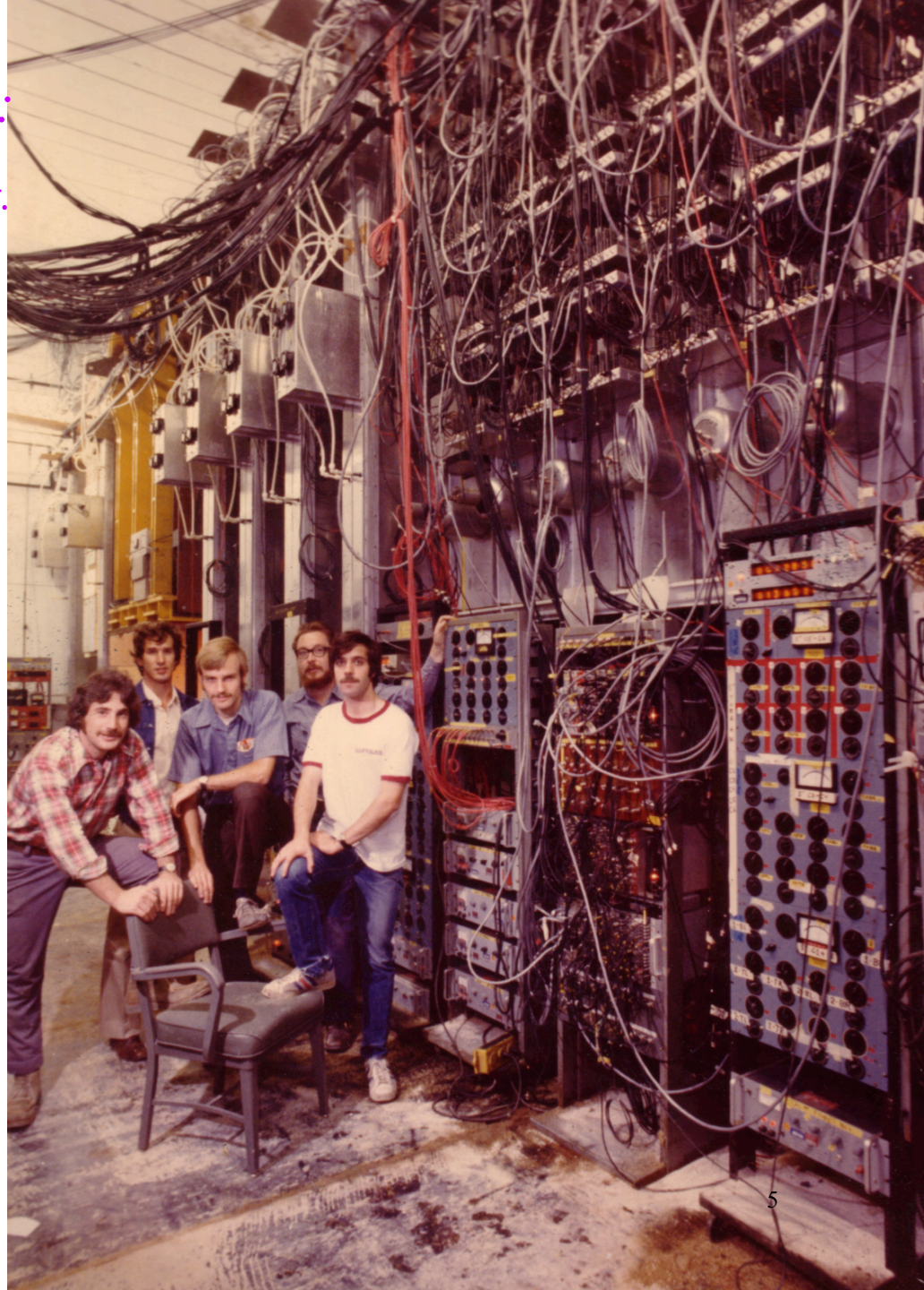

We proposed a sequel...

BNL E706: the 100 MeV beam points to Wallestonite Mine, NY, 100 km north.

Search for 1) Oscillations during beam bursts. 2) Proton decay between them.

Sam Ting, on BNL PAC: "I like it!" BNL response "Too risky."

But for kTons, oil costs to much.

Water?

Penalty: ~30 times less light,

but get natural directionality.

Accelerators...have PACs.

Why not use atmospheric ν_μ?

Interacting in water?

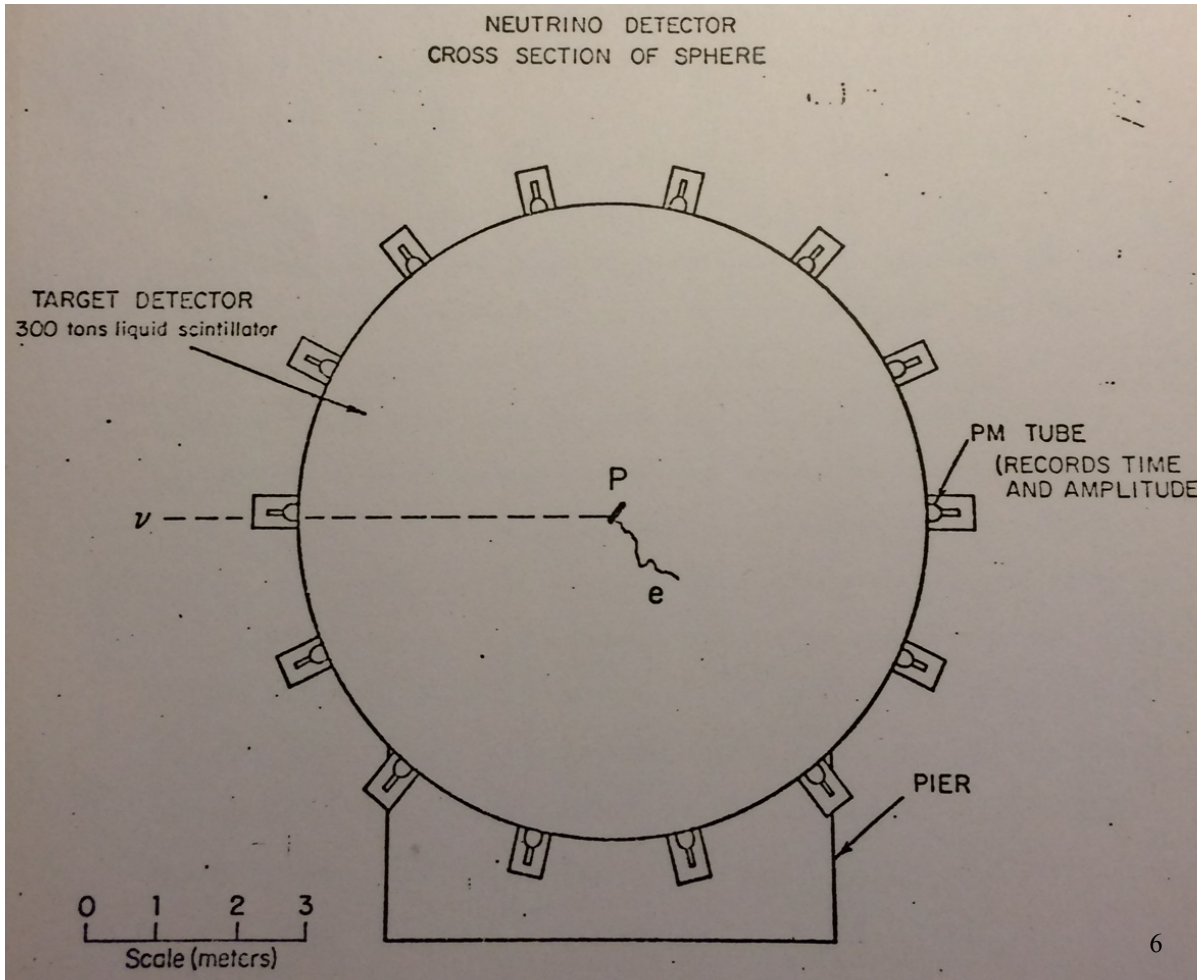

In'76 we designed an atmospheric neutrino detector, determining detector size, resolutions in angle (PM spacing), time...

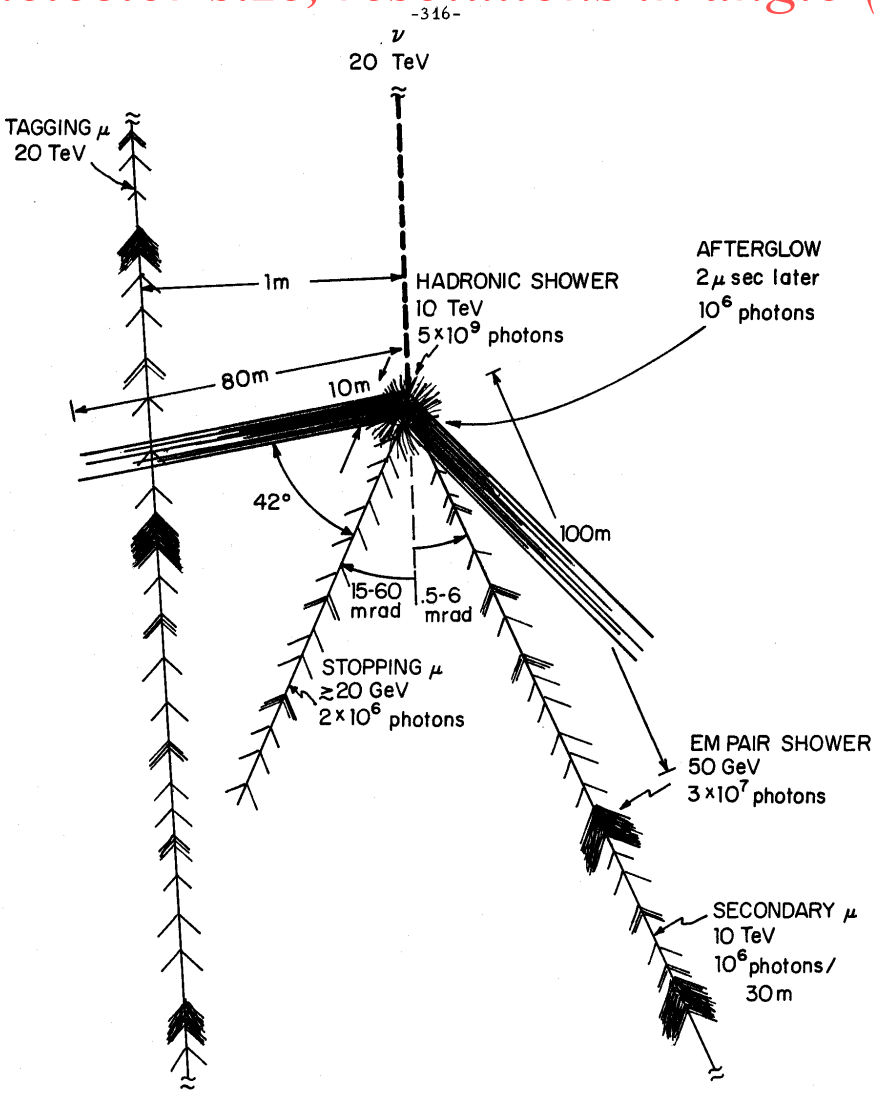

"Proc. 1976 DUMAND", LRS chair, "Neutrino Signatures" group, LRS graphics.

Theory: Berezinsky, Zatsepin. Detector concepts: Dolgoshein, Kropp, Learned, Reines, Sobel.

The 1976 detector layout and sensor design.

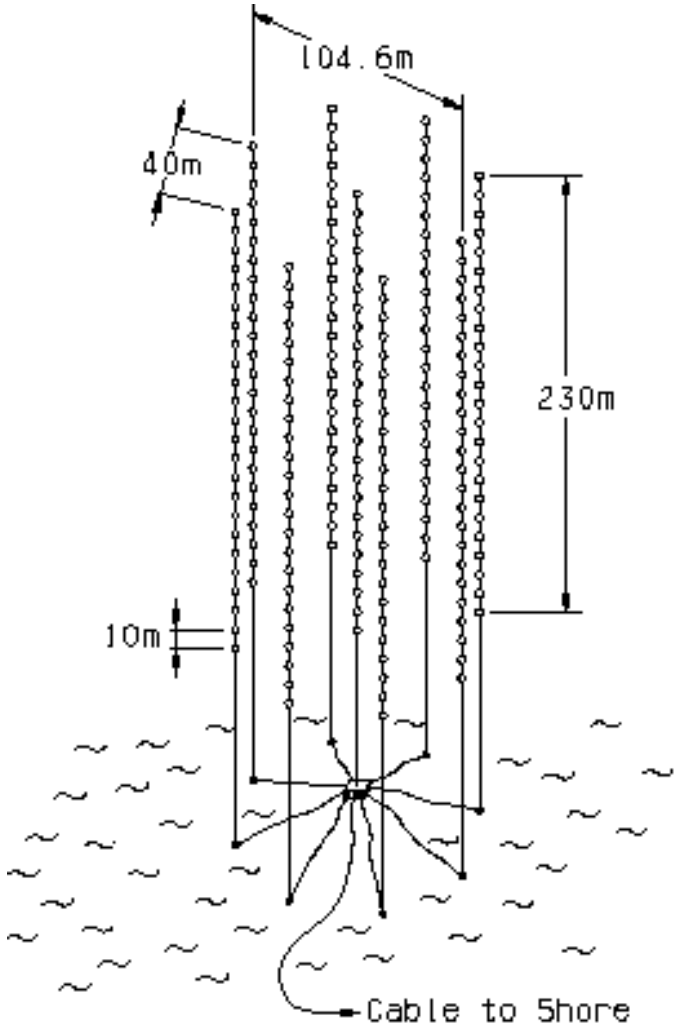

Berezinski & LRS, "Proc. 1976 DUMAND"

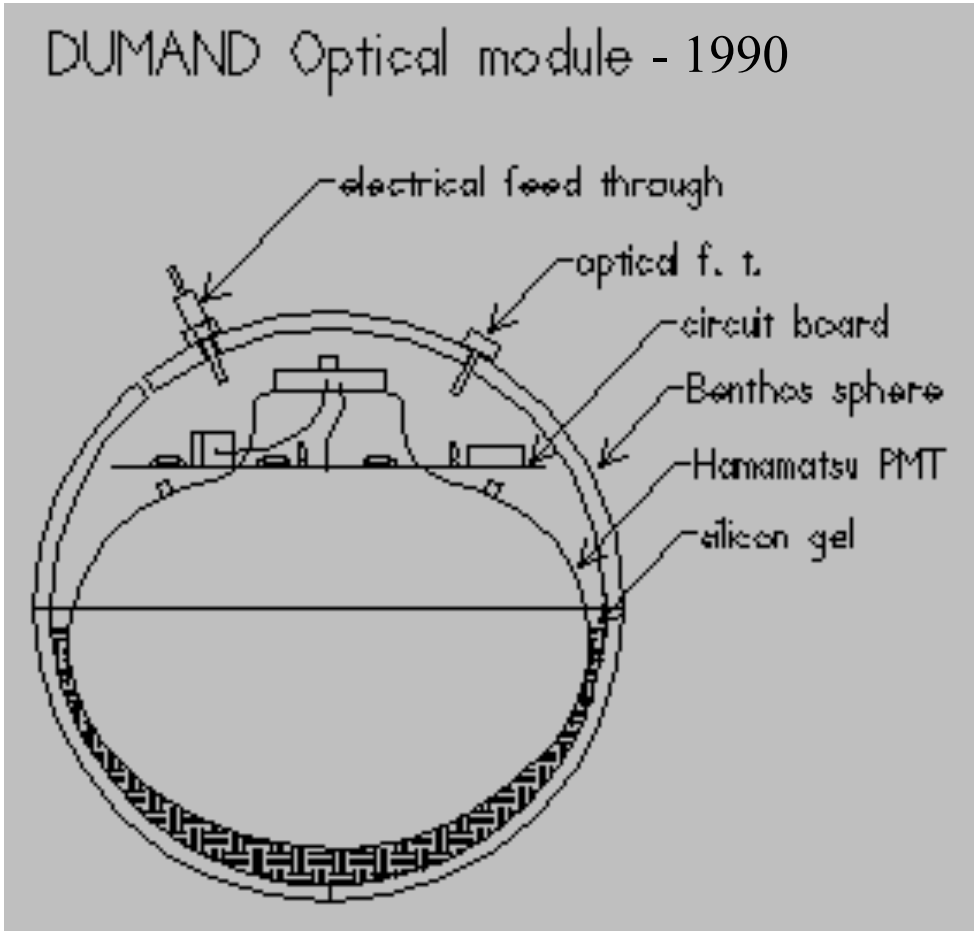

Prototype string produced in 1993, lost at sea off Hawaii

Definitively killed by 1993 US Budget ax.

Moved to Saclay...turned on as Antares in 2003, inspiring IceCube.

Miracle of 1977: 2 "angel" theories presented an overriding challenge:

1) SU5 predicts proton decay at ~10^{29} years.

Need 10^{33} nucleons.

Scintillating oil, at $1/kg, way too expensive, need 10 kT = $10 M.

=> Must use water, but DUMAND suggests conceptual design.

Know must be ½ km deep underground to eliminate muon background.

2) Non-SU5 Unifying Theories predict neutrino oscillations.

Must distinguish 1-ring interaction of atmospheric neutrinos from 2-ring PDK.

Need superior pattern recognition.

Timing to identify muon decay, distinguishing ν_μ from ν_e.

Dedicated 1978 to building prototypes for a 10 kTon detector.

postdoc LoSecco, grad students Cortez & Foster, 1 Harvard EE, Mike Levi

First paper on ring-imaging water Cherenkov detector
Madison Conference, December 1978.

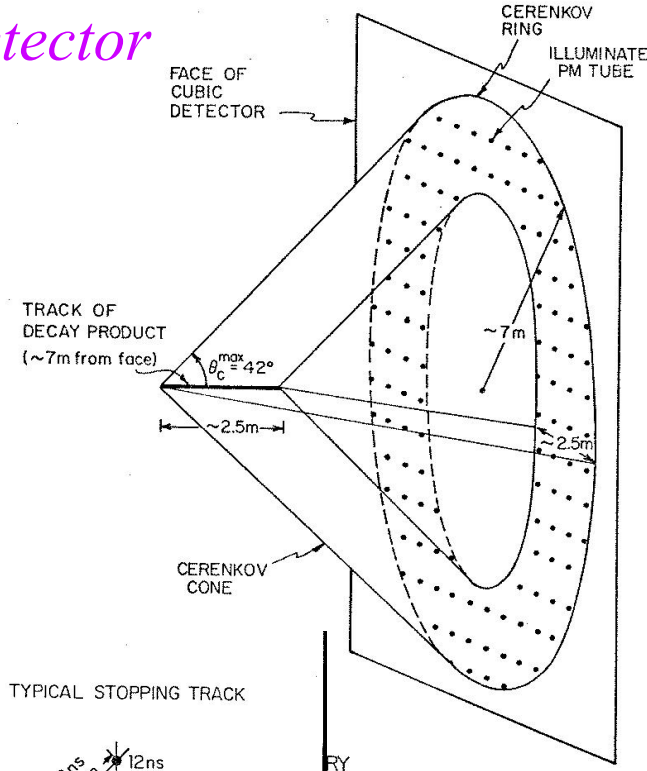

Totally-active

Surface array of PMs to maximize pixels

Cherenkov ring measures charged particle direction

10^{33} year PDK limit achievable in 5 years

Muon/electron discrimination:
via 2 timing scales, μsec & nsec.

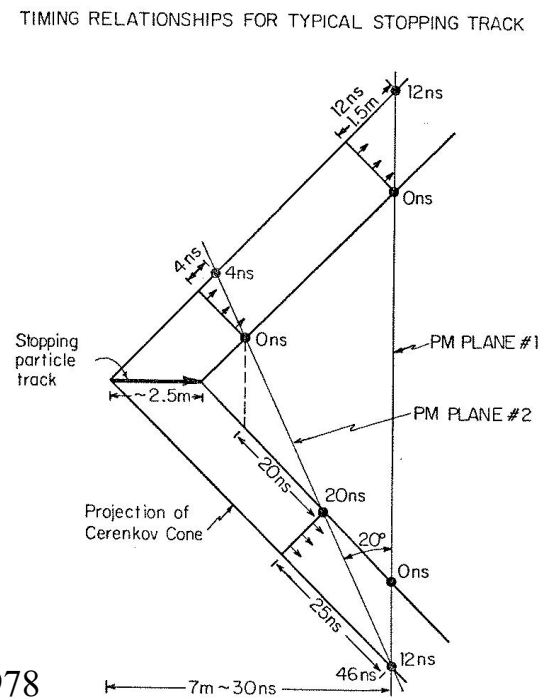

Proc. Seminar on Proton Stability, Madison, 1978

Monte Carlo PDK reconstructions:

For example, pattern from

$p \rightarrow e + \pi^0$ event:

Cherenkov rings hit ~6 faces of PMs.

2 ns timing resolution yields

good vertex & track angle reconstruction.

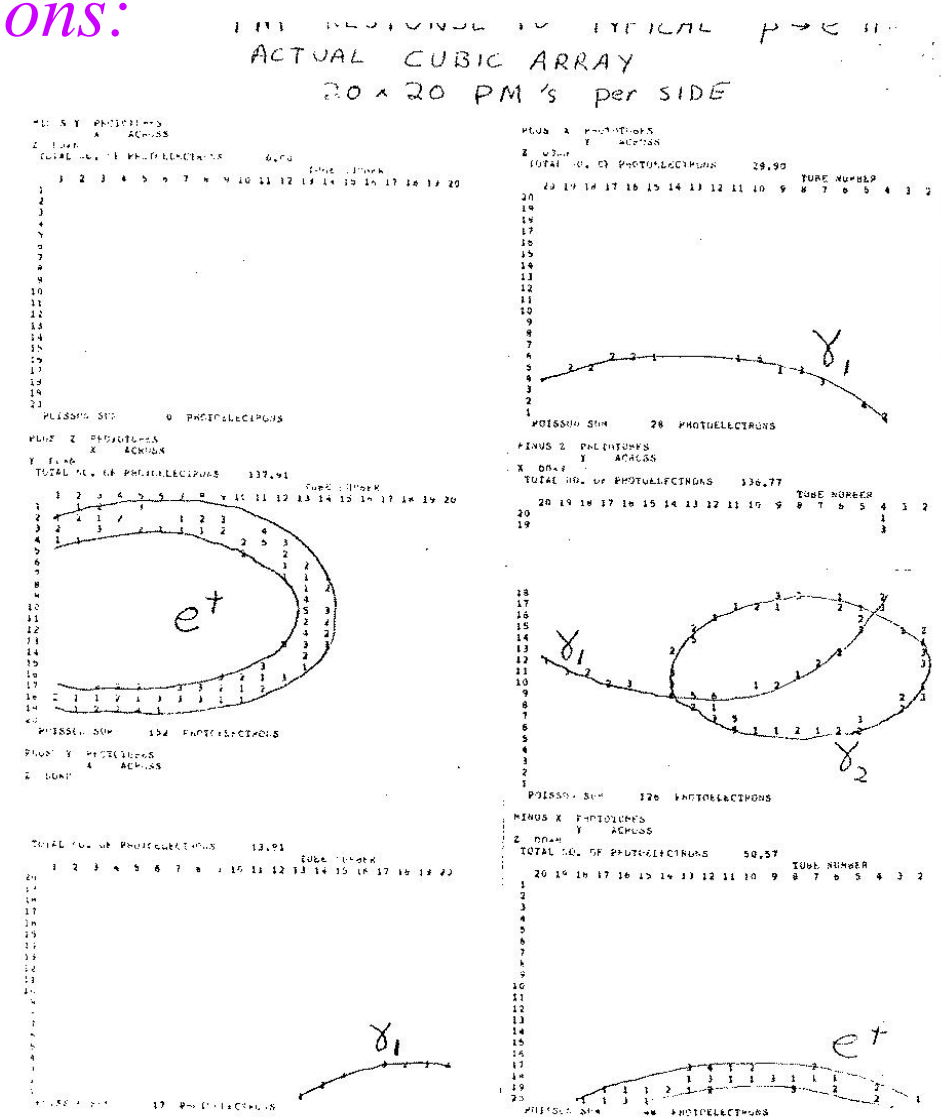

Fig. 3d

Cortez, "Proc. Seminar on Proton Stability, Madison, 1978"

IMB-3: 2048 8" phototubes with waveshifting light collectors.

…diver/physicist in dry suit in 10 kilotons of world's purist water.

Bionta, Errede, Kropp, Sobel, Jim Stone

IMB demonstrated features later emulated by many experiments:

Reverse osmosis gives > 60m transparency, — Culligan & US Navy
with only plastics (nylon, PVC, RTV) maintain purity.

Hemispherical photomultiplier envelop: — EMI 5”, Hiruma 8”
Isochronous, nanosecond time resolution — Learned
Single photoelectron level
Pressure tolerant to 3 atmosphere — Bridgman

Deadtimeless electronics (off the shelf too expensive) — Foster, Hazen
¼ photoelectron threshold
Two time scales:
nano-sec for directionality over 20 m baseline
micro-sec for identification of muon decay electrons

Calibration:
337 nm N_2 laser, quartz fiber, isotropic Ludox diffusing ball — Strait
with log attenuator for pulse height linearity — Bionta
Isotropic LED ball (avalanche photodiodes for timing) — Lessure

Achieved with Goldhaber, Reines, Sinclair, Vandervelde; Michigan Pres. Harold Shapiro & $1M seed monie.

1980 we realized the key to atmospheric oscillations: compare the up/down e/μ neutrino ratios:

Simulate oscillations:

atmospheric neutrinos give

up/down asymmetry

Detailed calculations by Cortez & LRS.

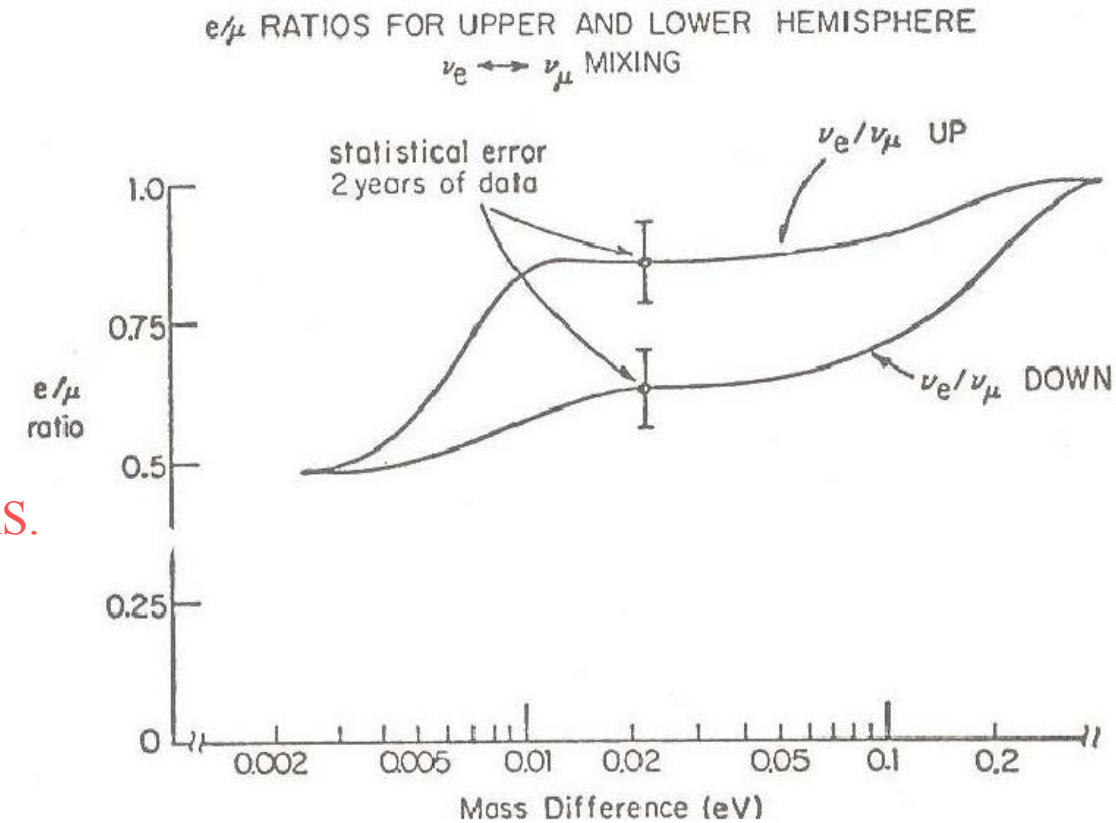

LRS: Proc. of Neutrino ’80; Proc. of First Workshop on Grand Unification,1980

Meantime, in Japan (Feb 1979),
Kamiokande proposes a 3-slab detector in a long tunnel:

a) Single 10 cm sheet of scintillator,
an atmospheric muon veto on top.
b) Inactive iron slab absorber.

c) 5 m thick water Cherenkov layer.

Fig 3. The detector considered

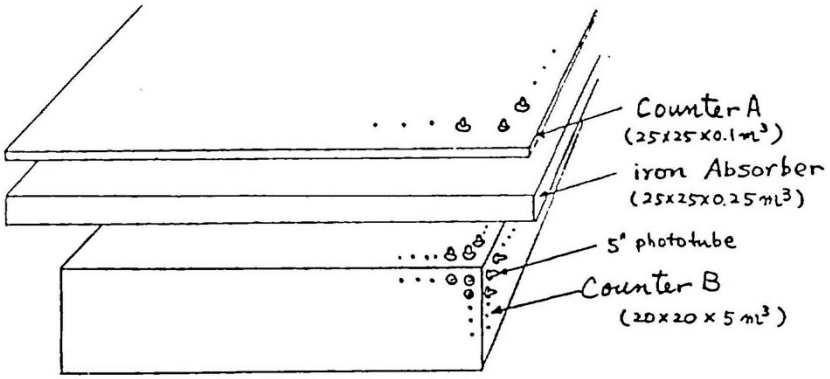

Fig. 4 $\rho \to \mu^+ \gamma$ decay in the detector B.

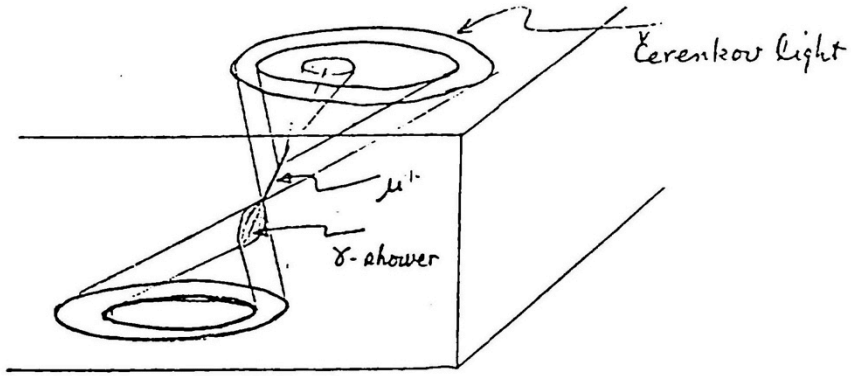

Watanabe *et al.*, Proc. Conf. Unified Theories & Baryon Number, 1979.

Upon hearing of IMB, Kamioka switches technology, credits LRS:

" ~1/3 as many PMs needed...makes his proposal very practical."

After this talk was typed as requested by the organizers of the workshop, I came across with a paper by L. Sulak,[14] who describes a very similar detector backed up with Monte Carlo simulation. One important point there is that the number of photomultipliers necessary can be as few as 3000, ~1/3 of the number described here, which makes his proposal very practical. I was too conservative in this respect, and hope that this kind of experiment is carried out so that one has a clue to plan next generation

Watanabe *et al*., Unified Theories & Baryon Number, 1979, p. 62.

Unfortunately Kamiokande fails to mimic IMB in some critical ways:

No fast timing for track reconstruction & direction;

Relying solely on pulse height from big PMs &10% photocathode coverage.

No reverse osmosis filtering...radon in heavy metal mine soon a problem.

Only 1/9 the total volume of IMB...requires an external veto.

No μsec timing for muon ID; they rely totally on topology

Meanwhile, IMB has a big problem from the very beginning...

Missing 25% of muon neutrinos...not enough $\mu \rightarrow e$ decay!

There are 25 events out of 112 with an observed muon decay. The distributions of lit PMT's and the time of the coincidence are shown in figure 8-8. The observed ratio of 22 ± 4% is to be compared to the expected ratio of 33%, which is 2.5 σ higher. The 33% is derived as follows.

Cortez PhD thesis, 1983

For 3 years, while accumulating data, we investigate all possible systematics, trying to falsify the "muon" anomaly. Frustrated, we publish:

VOLUME 57, NUMBER 16 PHYSICAL REVIEW LETTERS 20 OCTOBER 1986

Calculation of Atmospheric Neutrino-Induced Backgrounds in a Nucleon-Decay Search

simulation predicts that 34% ± 1% of the events should have an identified muon decay while our data has 26% ± 3%. This discrepancy could be a statistical fluctuation or a systematic error due to (i) an incorrect assumption as to the ratio of muon ν's to electron ν's in the atmospheric fluxes, (ii) an incorrect estimate of the efficiency for our observing a muon decay, or (iii) some other as-yet-unaccounted-for physics. Any ef-

Casper, Svoboda

In contrast, Kajita's 1986 PhD records in several places: no muon deficiency!

Then, the icing…bam…b-bam bam bam

…8 times in IMB,

in 13 seconds,

each with nice Č ring.

...11 in Kamioka.

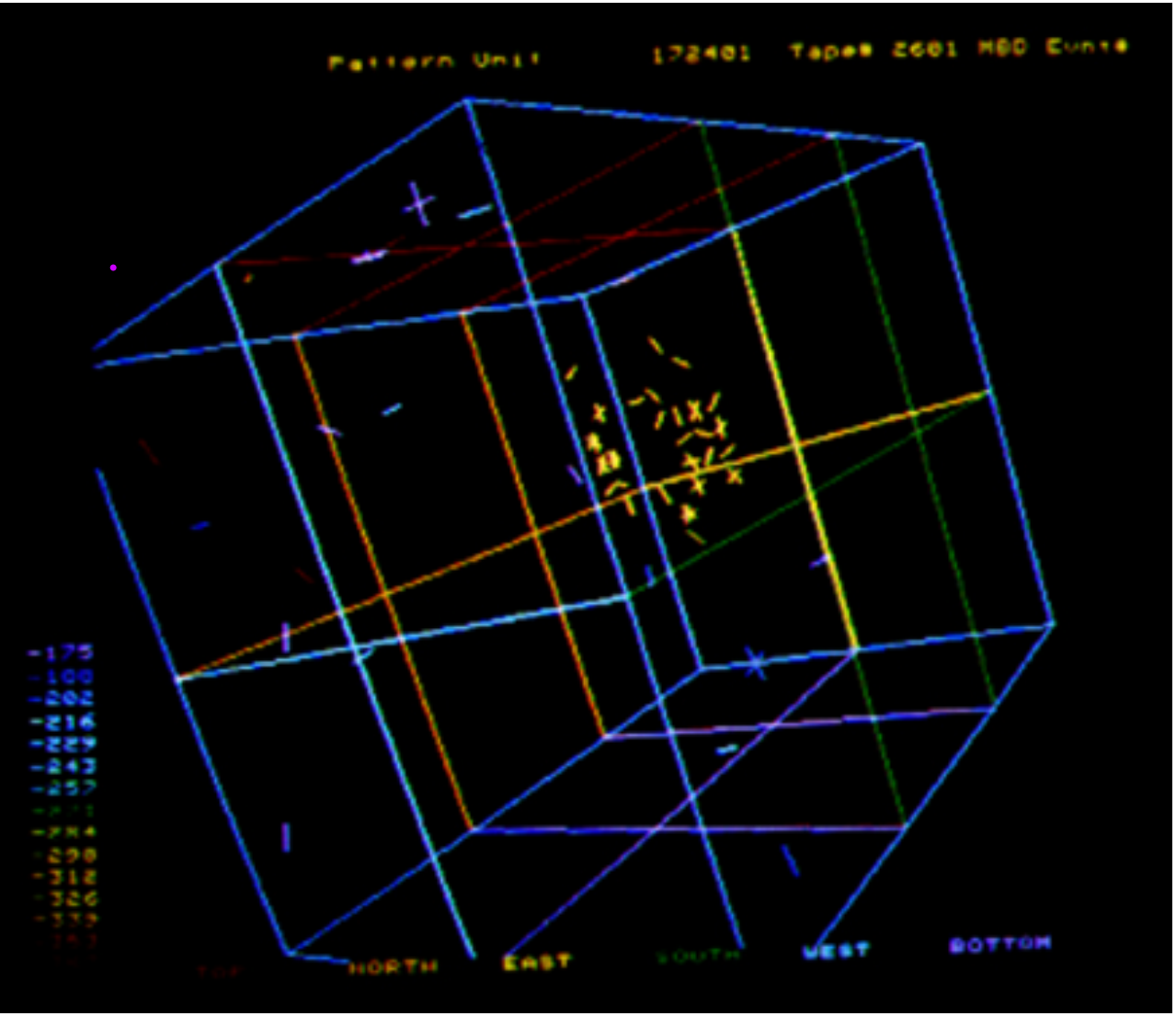

Greg Bernardi, Casper, Shumard, Svoboda

…as a sun in LMC implodes, then explodes.
(though Kamioka's clocks off due to power failure.)

For his postdoc, Cortez joins the Japanese & installs IMB muon timing.

4 years later, 1988, Kamiokande confirms the muon deficit!

Kamiokande:

Muon rate only 59 ± 7% assuming no oscillations

Note the deficiency in the muon spectra:

Japanese cite IMB in quoting their deficit.

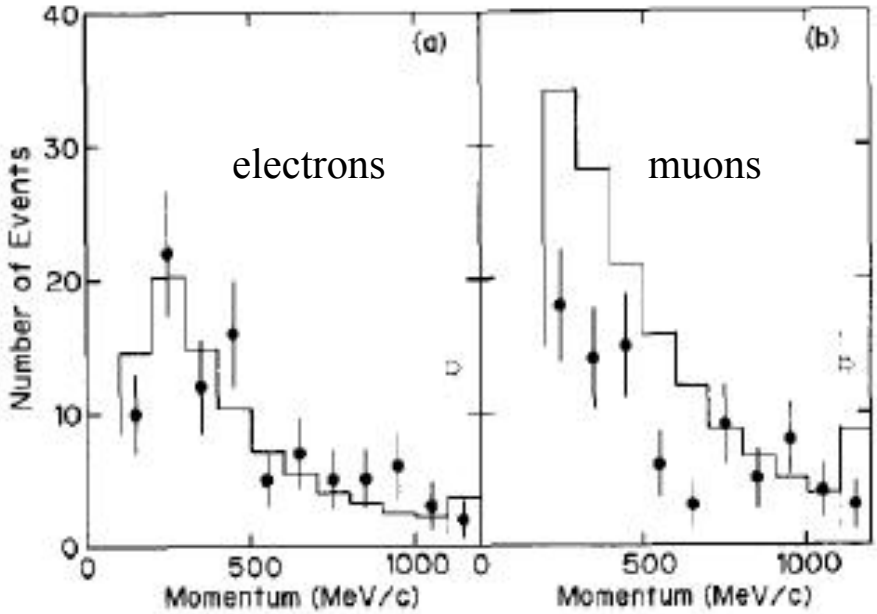

K.Hirata *et al.,* Phys. Lett 205, 416 (1988)

LRS calls Totsuka: "Each of two 3.5 sigma results is not compelling.
Let's join forces to build SK:
IMB would become the currently unfunded outer detector."

Subsequently SuperK & SNO (both modeled on IMB)
confirm neutrino oscillations & are awarded the Nobel Prize.

The message?

3 necessities when designing a neutrino detector:

mass,

number of pixels, &

$\geq$ 2 independent observables, e.g. timing & pulse height

Thank you for honoring our

contributions to neutrino science & instrumentation.

RESERVE

Detector overview, Madison proposal...

A cube ~14 m ID ficucial on each side.
Total volume of 18^3 m^3
1.5×10^{33} nucleons inside
2 m external veto region.

Surface array of 5" diameter hemispherical PMTs.

Spacing of 0.7m between PMTs.

2400 PMTs, 1% photocathode coverage.

¼ photoelectron threshold.

Energy threshold 30 MeV,
to see muon decay electrons.
Detection efficiency 50%
using μsec timing scale.

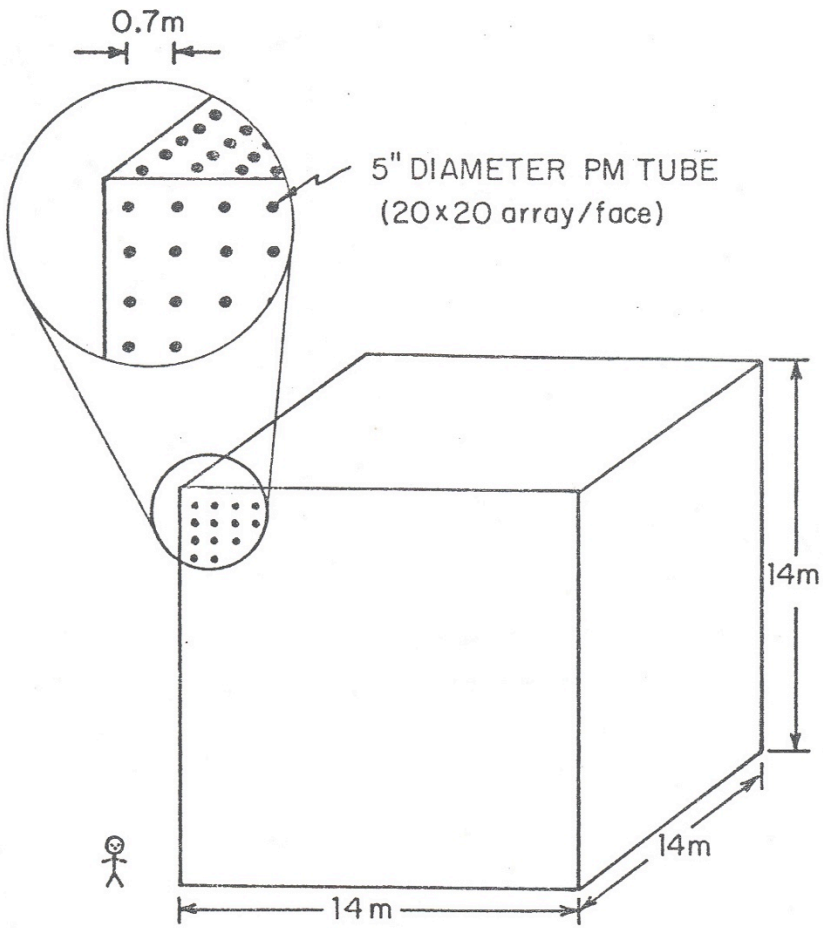

DETECTOR CONFIGURATION

"Proc. Seminar on Proton Stability, Madison, 1978."

Detector overview, Madison proposal...

A cube ~14 m ID ficucial on each side.
Total volume of 18^3 m^3
1.5×10^{33} nucleons inside
2 m external veto region.

Surface array of 5" diameter hemispherical PMTs.

Spacing of 0.7m between PMTs.

2400 PMTs, 1% photocathode coverage.

¼ photoelectron threshold.

Energy threshold 30 MeV,
to see muon decay electrons.
Detection efficiency 50%
using μsec timing scale.

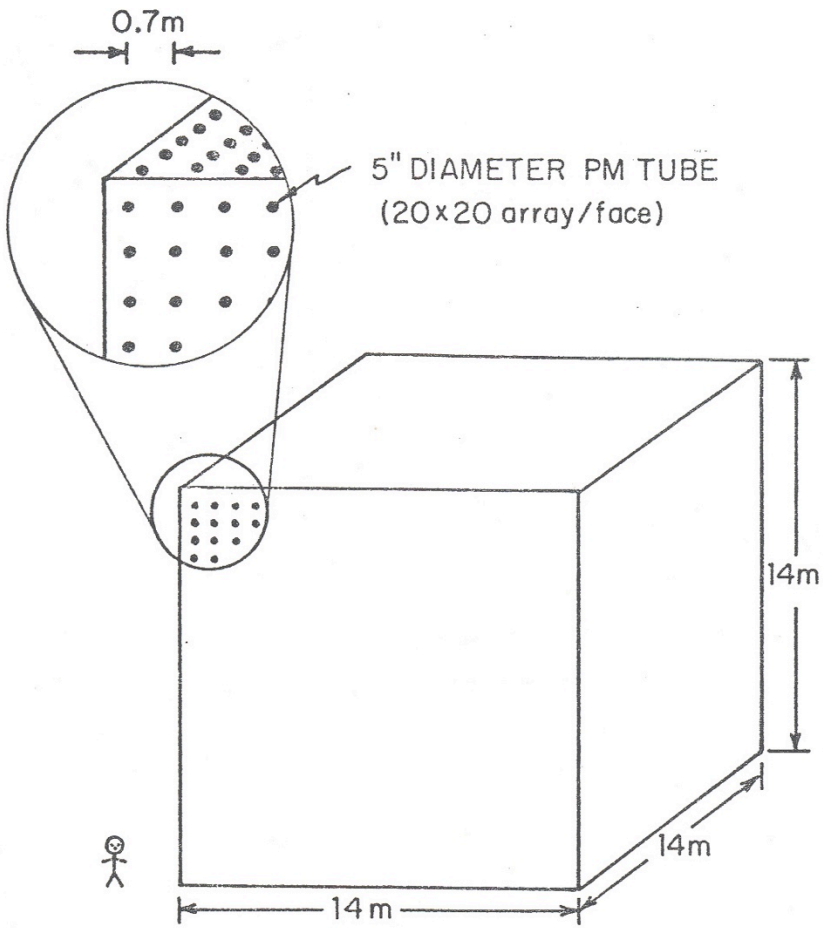

DETECTOR CONFIGURATION

"Proc. Seminar on Proton Stability, Madison, 1978."

Conceptual Cherenkov geometry from '78 Madison paper...

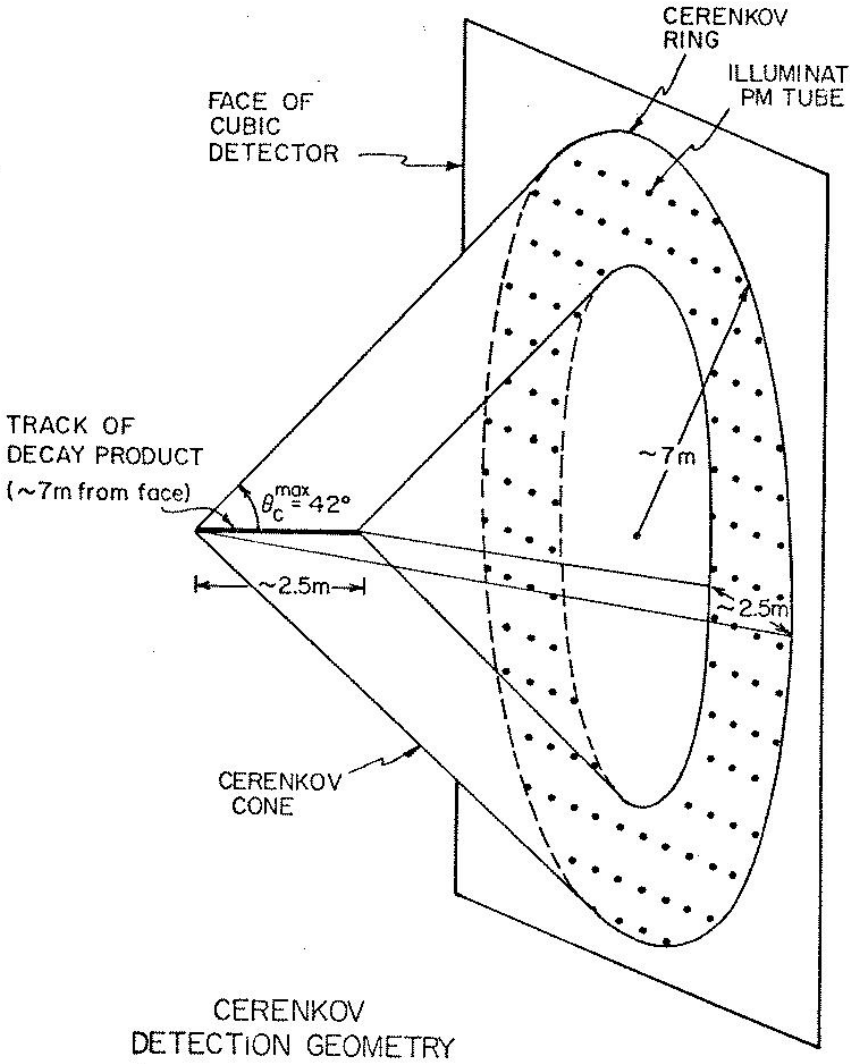

Fig. 2a

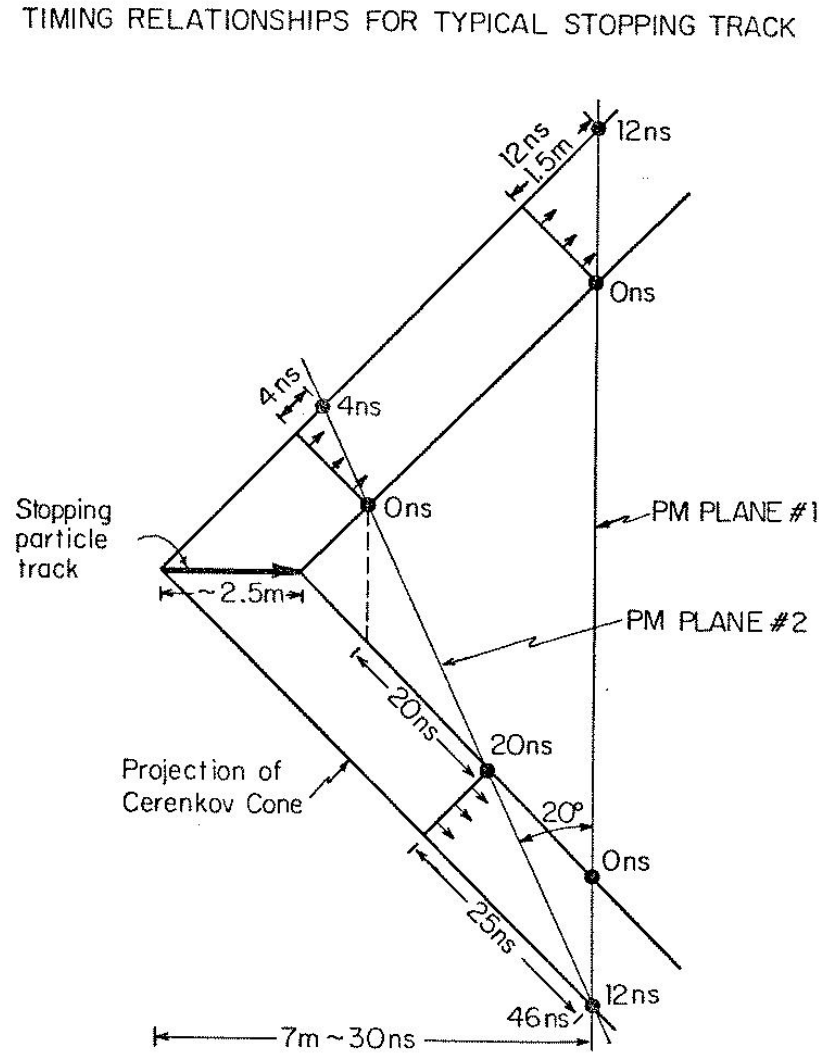

Fig. 2b

Proc. Seminar on Proton Stability, Madison, 1978

Madison Conference, December 8, 1978, pre-IMS paper: First detailed paper on imaging water Cherenkov detector:

Totally active calorimeter.

Cherenkov,
measures charged particle directions.

Surface array of PMs, more pixels.

Neutrino events distinguished from PDK.

10^{33} year PDK limit achievable.

Muon/electron discrimination with
2 timing scales, μsec & nsec.

600 m underground shielding sufficient.

HUPP252
HUPDM 1

A TEST OF BARYON STABILITY SENSITIVE
TO A LIFETIME OF 10^{33} YEARS

Abstract

A totally-active, water Cerenkov detector, located underground to limit the background to only those events induced by atmospheric neutrinos, is sensitive to most of the conjectured decay modes of the nucleons in it. Sensitivity to π, μ, e and γ secondaries, good energy resolution, and good angular resolution enhance the backround rejection of the device and provide significant information about the decay channel should it be observed. If no events are recorded during one year of operation, a lower limit of 10^{33} years can be placed on the lifetime of the nucleon decaying into most modes. Depending upon the decay channel, this is three or four orders of magnitude longer than previous measurements, and is at the level suggested by many unifying theories. This experiment has a sensitivity within an order of magnitude of that achievable in any conceivable detector since known background from atmospheric neutrinos imposes an inherent limit. Since unanticipated backgrounds may influence the design of any definitive experiment, the proposed detector can be considered a prototype for an ultimate experiment.

Presented by L. Sulak at the
Madison Seminar on Proton Stability
University of Wisconsin
December 8, 1978

1st long-baseline oscillation proposal:

LRS presentation *January 1977*

A STUDY OF THE TIME EVOLUTION OF A LONG-LIVED ν_μ BEAM

E706

E. Egelman, B. Gordon, W. Kozanecki, W. Loomis, J. LoSecco, C. Rubbia, A. Sessoms, D. Shambroom, J. Strait, L. Sulak, C. Tao, R. Wilson and M. Yudis

Department of Physics
Harvard University
Cambridge, Massachusetts 02138

Abstract

We propose to study the time evolution of a long-lived ν_μ beam at Brookhaven National Laboratory. Sensitivity at large proper times $\tau = \ell/p$ (where ℓ is the flight length and p is the momentum of the neutrino) is achieved by going to low neutrino momentum. The AGS proton momentum is chosen to concentrate the ν_μ flux at very low energy where all background reactions are kinematically suppressed. In particular $\nu_\mu \to \nu_e$ transformations are sensed via $\nu_e n \to e^- p$ or by the classic reaction $\nu_e + C_{12} \to N_{12} + e^-$ followed by a delayed $N_{12} \to C_{12}\, e^+ \nu_e$ signal. We propose (1) a 300 T detector for the definitive experiment and (2) an early exploratory test with the existing Brookhaven neutrino detector.

17 January 1977

Submitted to Brookhaven National Laboratory

Proposal includes fast time & pulse height design...

1 nsec resolution for position & direction reconstruction.

Course time scale: 10 nsec resolution for muon decays.

Charge integration for energy

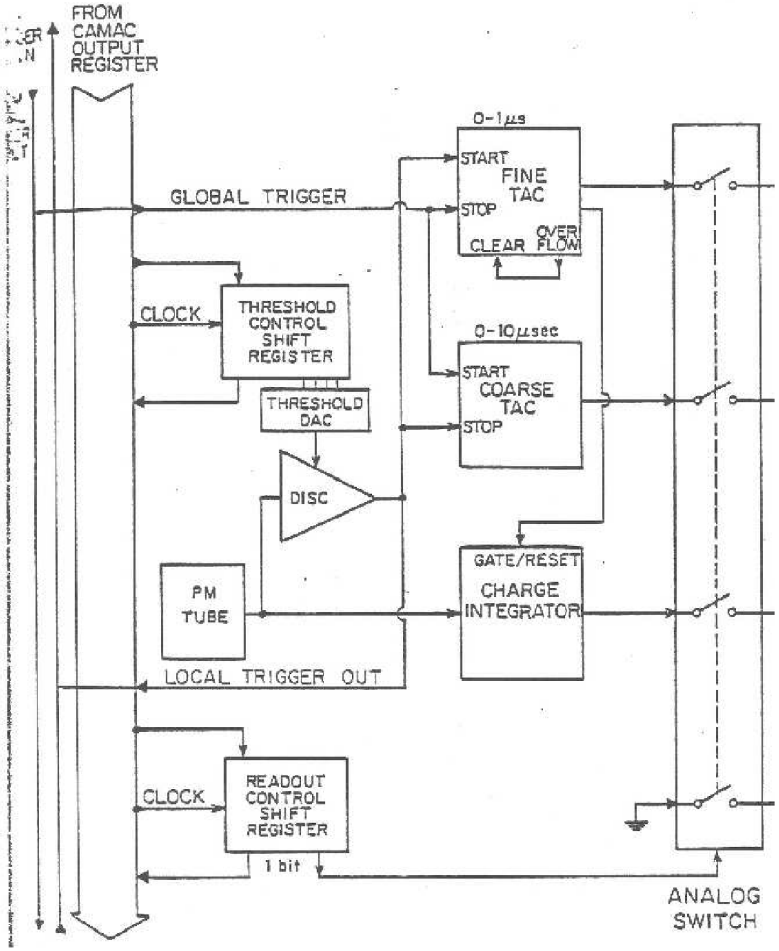

Engineered by Foster, then Hazen

But big problem from the start...

We're missing muon neutrinos

...not enough $\mu \rightarrow e$ decay!

There are 25 events out of 112 with an observed muon decay. The distributions of lit PMT's and the time of the coincidence are shown in figure 8-8. The observed ratio of 22 ± 4% is to be compared to the expected ratio of 33%, which is 2.5 σ higher. The 33% is derived as follows.

Cortez PhD thesis, 1983

A SEARCH FOR NUCLEON DECAY INTO
LEPTON AND K°

A Thesis Presented
by
Bruce Gilbert Cortez
to
The Department of Physics
in partial fulfillment of the requirements
for the degree of
Doctor of Philosophy
in the subject of
Physics

Harvard University
Cambridge, Massachusetts
September, 1983

Work supported in part by the U.S. Department of Energy under contracts DE-AC02-76ER03064 at Harvard University and DE-AC02-76ER01112 at the University of Michigan.

Kamiokande relied totally on pulse height...IMB on timing, pulse height, # pixels, mass.

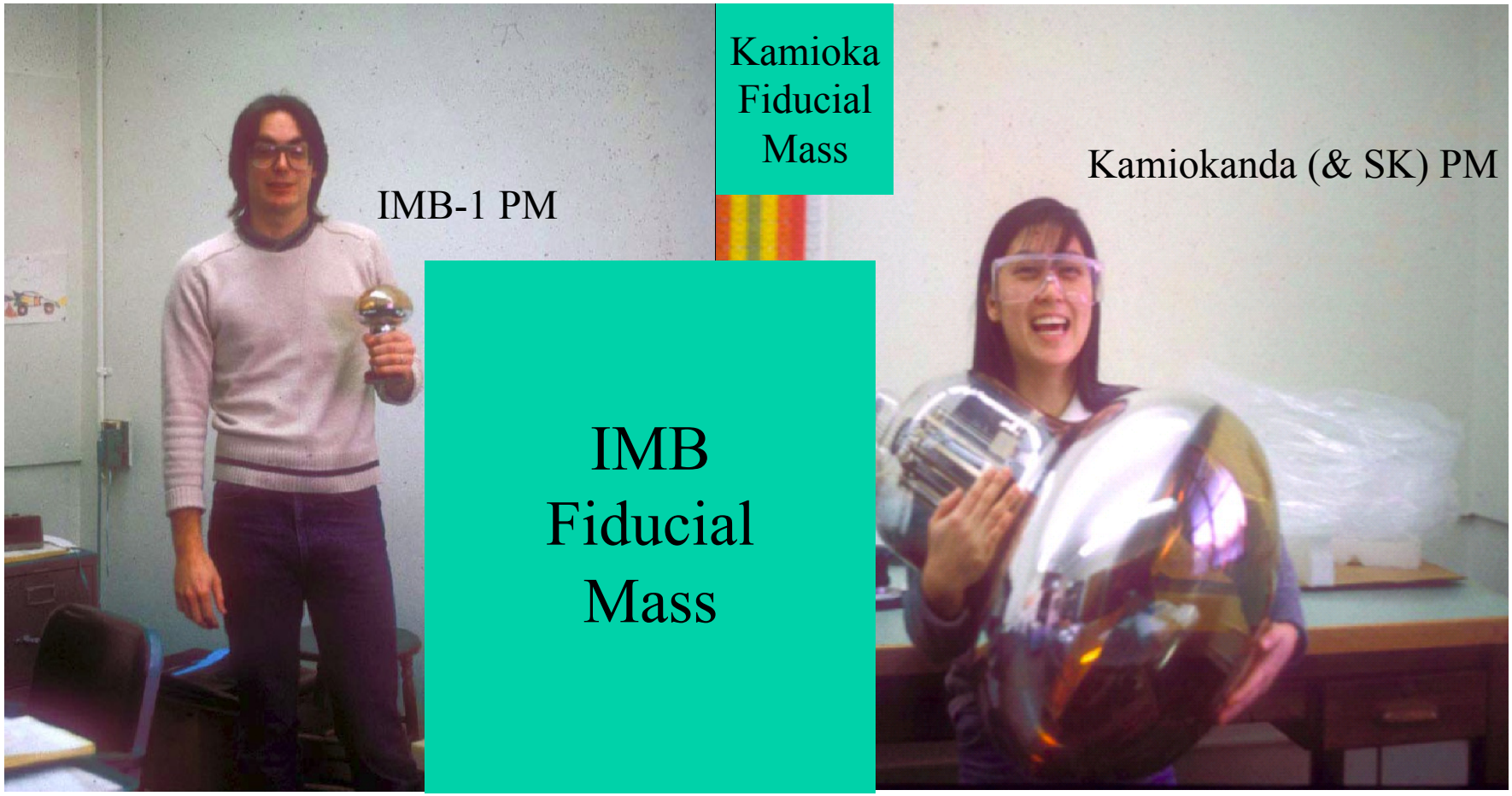

Using IMB's Poisson code, Mr. Hiruma (President, Hamamatsu) scaled up the EMI 5".

Michigan grad students Shumard & Park

3 generations of optical transducers...with IMB Electronics:

(DUMAND 15” optical module)

Flat-faced 5” PMs become:

IMB-1: 5” PM

IMB-2: 5” PM + Wavelength Shifting plate

IMB-3: 8” PM + Shifter plate (not shown)

IMB design: later experiments emulate many elements...

Reverse osmosis 60m transparency — Culligan & US Navy
- Only plastics: nylon & PVC to maintain purity

Hemispherical photomultipliers — EMI 5”, Hiruma 8”
- Isochronous, Nanosecond time resolution — Learned
- Single photoelectron level
- Pressure tolerant, operational underwater to 3 atmosphere — Bridgman

Deadtimeless electronics — Foster, Hazen
- ¼ photoelectron threshold
- Two time scales:
  - nano-sec for directionality over 20 m baseline
  - micro-sec for identification of muon decay electrons

Calibration: 337 nm nitrogen laser for pulse height, log attenuator — Strait
- Isotropic Ludox diffusing ball for monitoring — Bionta
- Isotropic LED ball with avalanche photodiodes for timing. — Lessu

w/ Goldhaber, Reines, Sinclair, Vandervelde; Harold Shapiro

Instrumentation: The physics drives it; benefits from it.

Challenges "1978 IMB Proposal": IMB answers over 10 year span:

Do protons disintegrate? If they do, live > 10^{32} years; SU5 dead.

Do neutrinos oscillate? Yes, at least to 3.5 sigma CL.

Do supernovae implode? Yes! as predicted.