Fermilab

DUNE DEEP UNDERGROUND NEUTRINO EXPERIMENT

Optimization of the LBNF neutrino beam

Rowan Zaki, for the DUNE collaboration

DPF meeting: August 3rd, 2017

Radboud University Nijmegen

Overview

- Introduction
- Optimization process
  - Reference vs optimized three horn design
- Potential staging configurations
- Future work & Summary

Introduction: DUNE/LBNF beamline

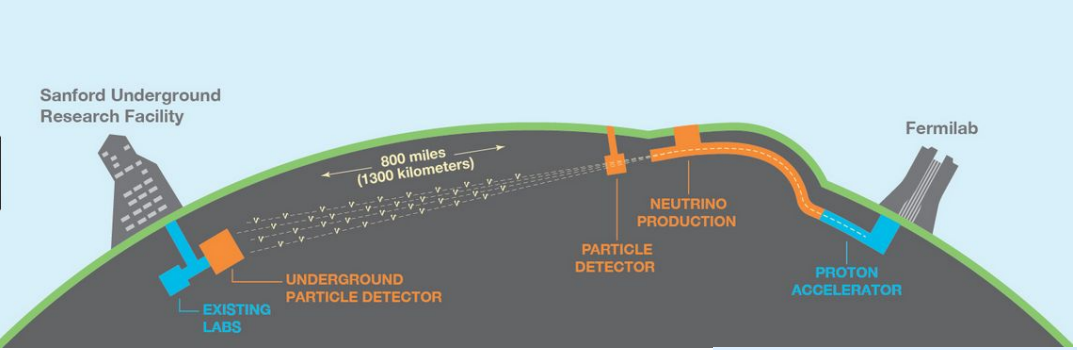

Figure 1: DUNE/LBNF baseline key elements

★ Creation and focusing of charged hadrons!

π -> μ + ν decay

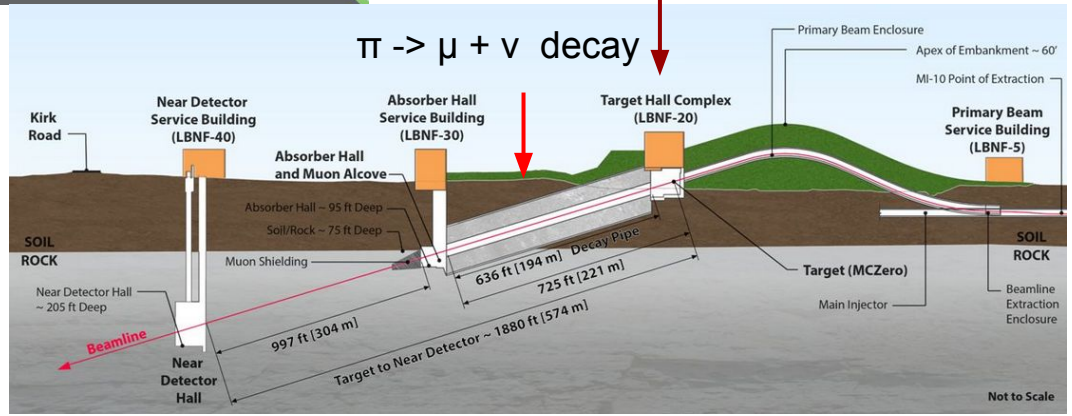

Figure 2: DUNE/ LBNF detailed overview Fermilab site

➔ Looking for CP-violation by studying neutrino oscillations at a 1300 km baseline

CDR reference neutrino beamline

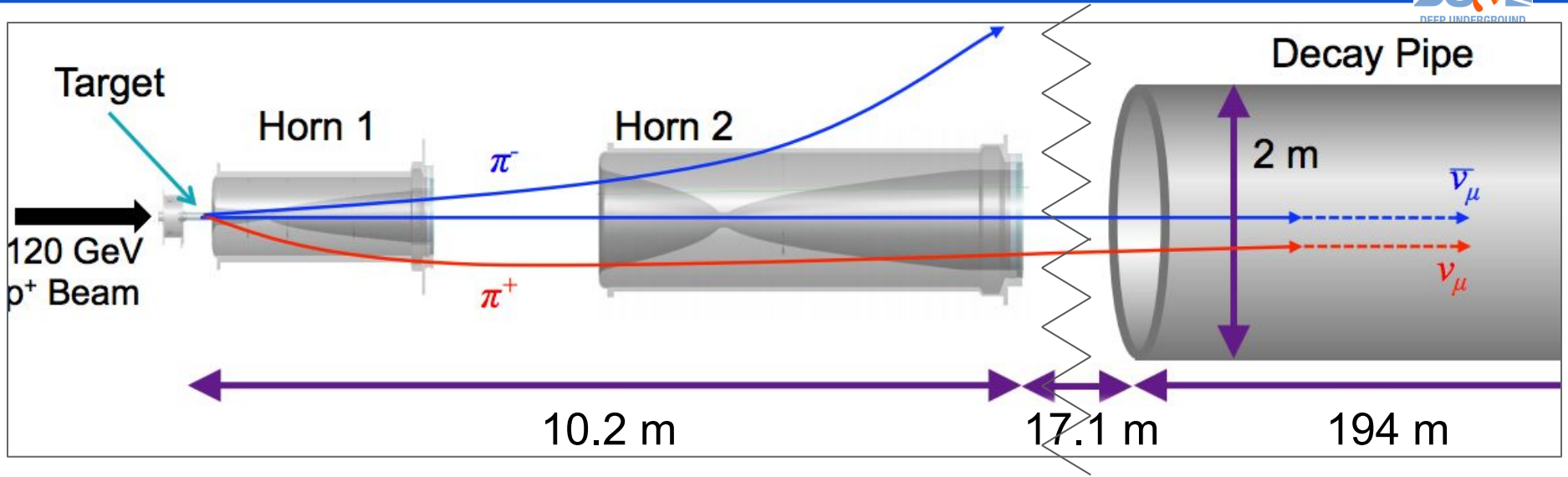

Figure 3: DUNE CDR reference beamline design

- ➔ Key elements; A proton beam, a target (graphite), focusing horns (2) and a decay pipe
- ➔ Target and horns are based on the successful NuMI design

Optimization process

- Genetic optimization algorithm
  - INPUT: Optimizable parameters within boundaries
  - PROCEDURE STEP 1: Generate 100 random configurations (parents) with a set of thirty parameters (chromosomes) and calculate CP sensitivity for every set
  - PROCEDURE STEP 2: Parents are matched and produce children with parameters from mother or father (mutation and cross-over)
  - Output: Set of designs (children) that are more sensitive to CP-violation than parents

Horn size, length, shape, target geometry etc..

For instance: Horn A outer conductor radius: [200 mm, 1000 mm]

Algorithm chooses 100 sets of (example):
Horn A OC radius: [540 mm]
Horn shape: conical
..
..

Optimized engineered three horn neutrino beamline

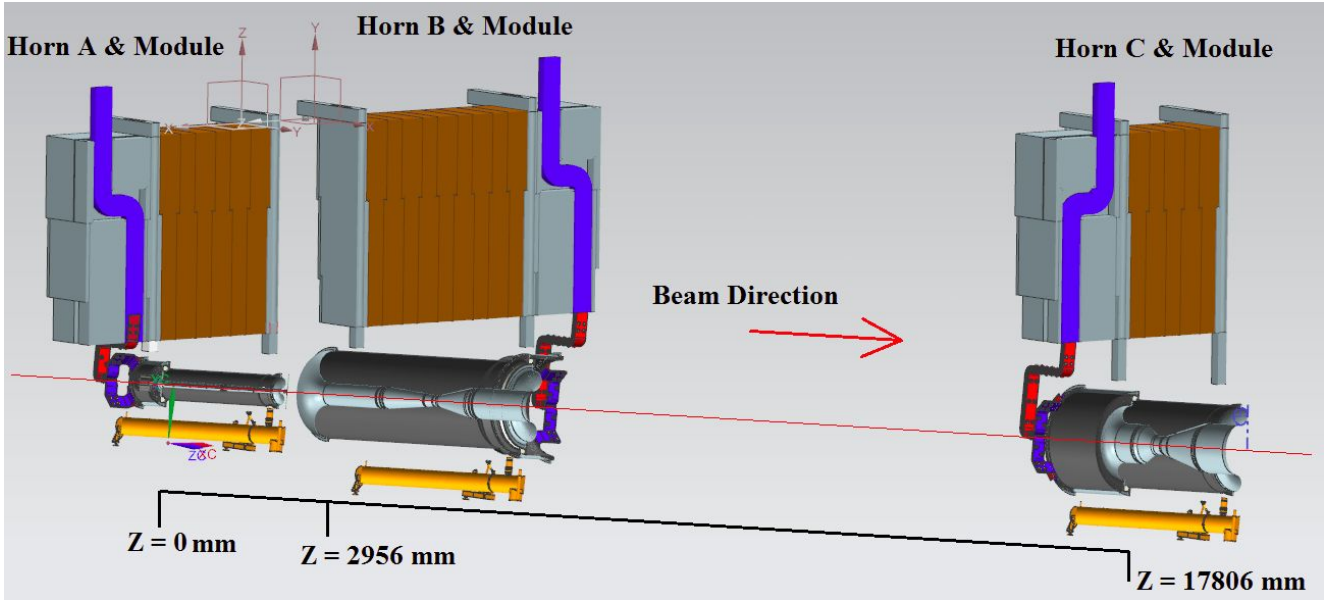

Figure 4: Optimized three horn design of the LBNF beamline (Horns and target)[C. Crowley]

- ➔ A 2 m long graphite target, which fits inside horn A
- ➔ Three magnetized horns (focusing elements) of different shapes(conical) and sizes
- ➔ A 194 m long decay pipe

❖ Figure includes engineering constraints made after the optimization algorithm

Ref. design vs Optimized 3-horn design

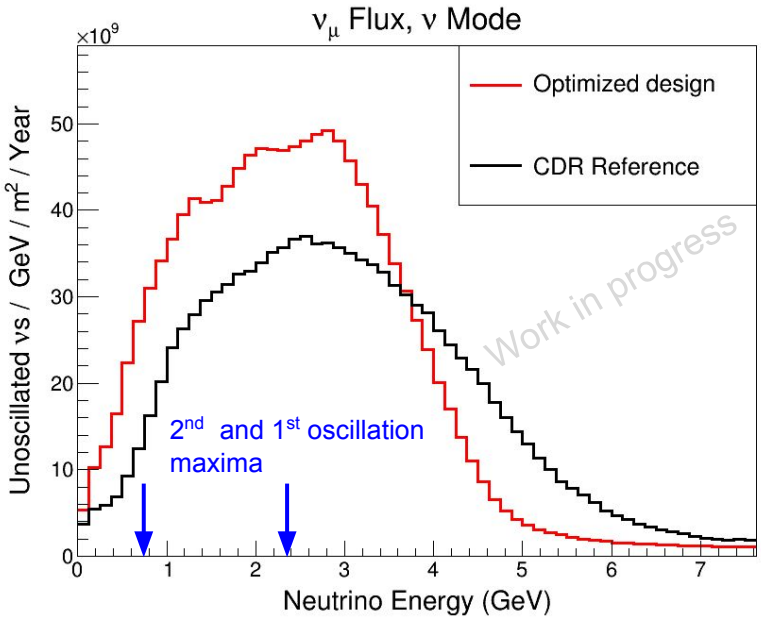

Figure 5: Comparison of neutrino flux for the CDR reference design and three horn design

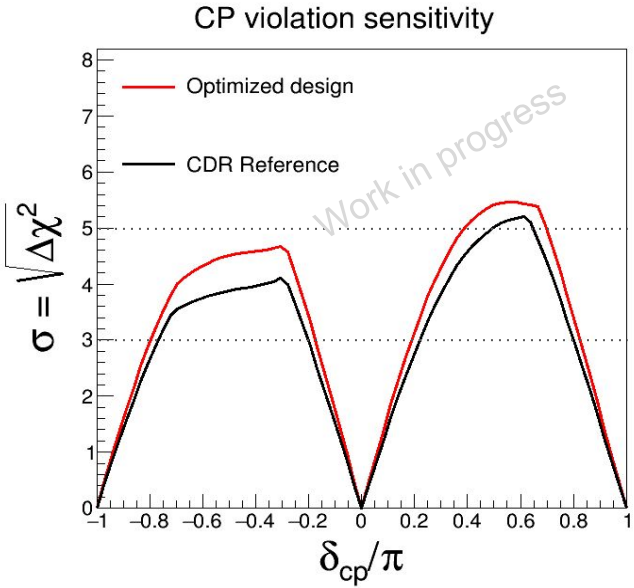

Figure 6: Comparison of CP-sensitivity for the CDR reference design and three horn design

➔ Increase in the neutrino flux for the desired energy region 2-3 GeV

➔ Reflected in an increase in CP-sensitivity

Optimizable parameters:

DEEP UNDERGROUND NEUTRINO EXPERIMENT

Changes to the optimized design (Engineering motivated)

- ➔ Horn C position
  - ◆ Free up space behind horn C in order to install measurement equipment

Potential improvements (Optimization motivated)

- ➔ Target position
  - ◆ Moving the target along the z-axis to see the effect on the flux/CP-sensitivity

Horn A and Target

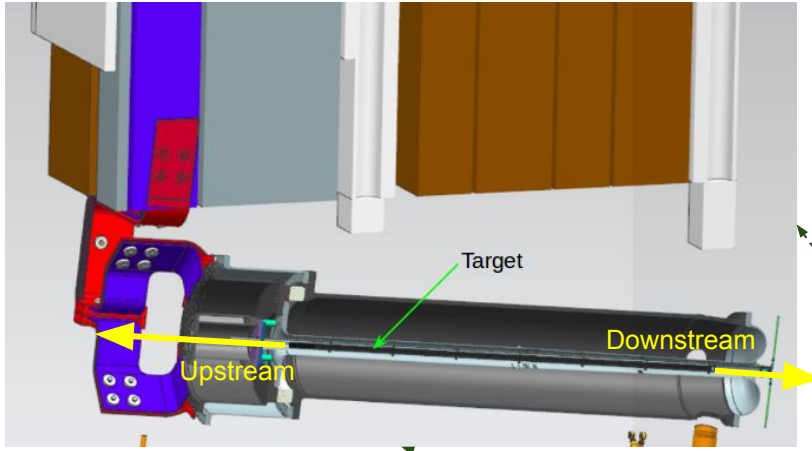

Figure 7: Movement of target within Horn A(C. Crowley)

➔ Moving the target from 25 cm upstream to 25 cm downstream in 5 cm increments

➔ Moving Horn C upstream in increments of 30 cm up to 90 cm

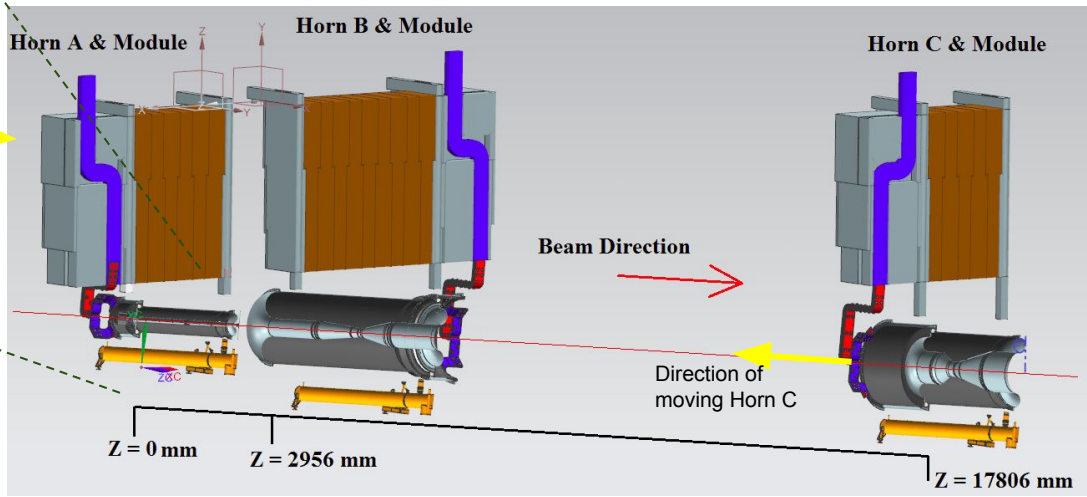

Figure 8: Movement of Horn C within LBNF beamline (C. Crowley)

Horn C position: CP-sensitivity

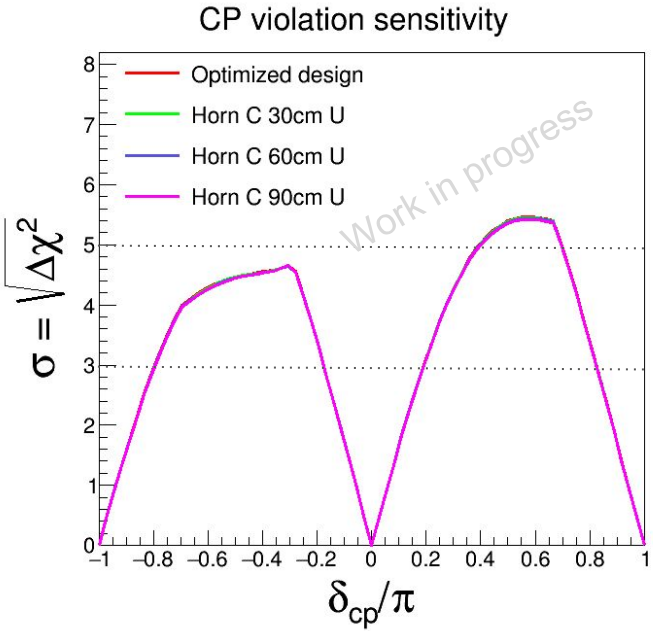

Figure 9: CP-sensitivity for different positions of Horn C along the beamline

★ 30 cm upstream

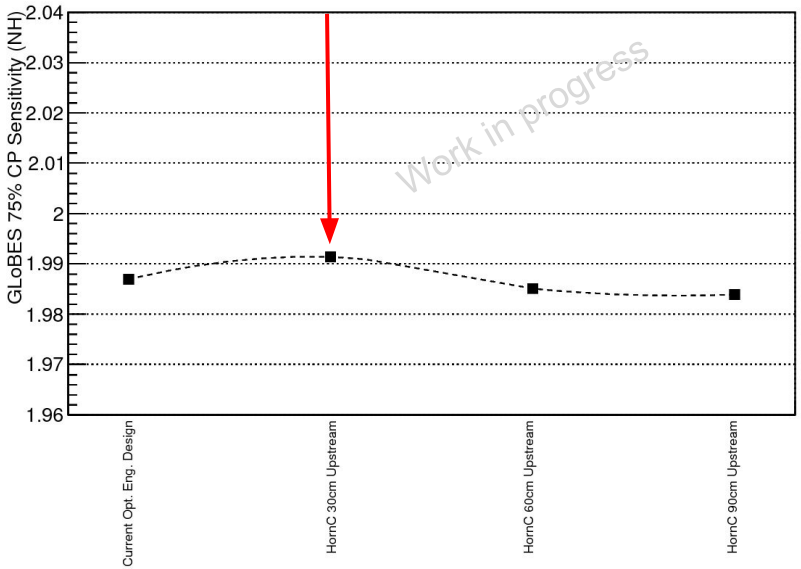

Figure 10: 75% CP-sensitivity for different positions of Horn C along the beamline v

★ Moving Horn C has little to no effect on the CP-sensitivity.

Target position and CP-sensitivity

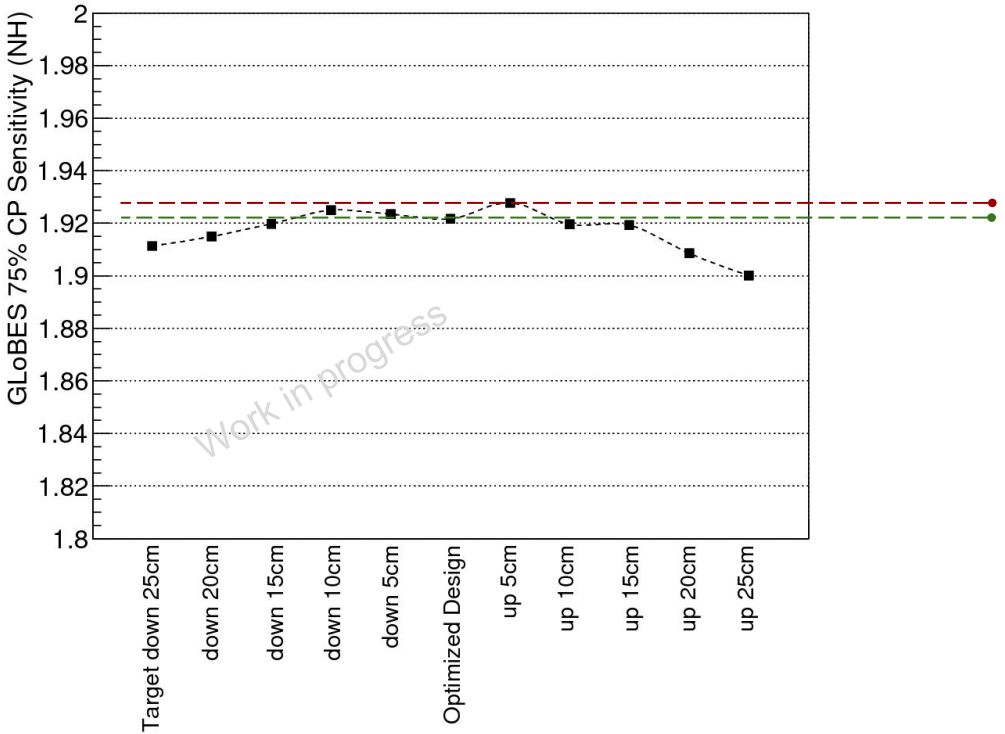

Figure 11: CP-sensitivity for different target positions along the beamline downstream (left) to upstream (right)

Moving target upstream by 5 cm will give the largest increase w.r.t. the current state of the optimized design

Potential staging configurations

- Study the effect that running with a staged design would have on the neutrino flux and CP-sensitivity

- Staged design options; Only horn A, Horn A & B, Horn A & C and compare with the CDR reference design

- All following simulations done with 120 GeV protons

Potential staging configurations: Neutrino flux

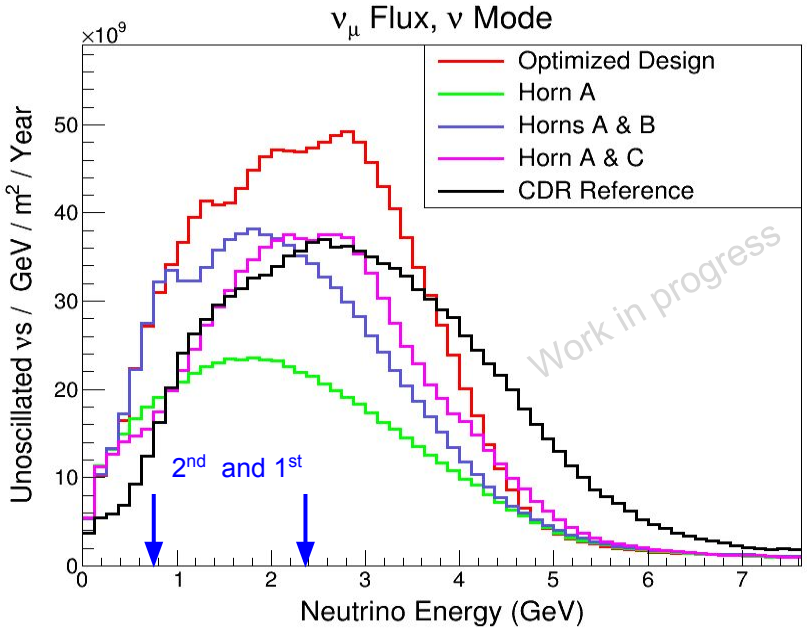

Figure 12: Neutrino flux for potential staging configurations

- ➔ Removal of Horn B decreases the flux at the higher energies (2.2 GeV -)
- ➔ Removal of Horn C decreases the flux at the lower energies (0 - 2.2 GeV)

Potential staging configurations: CP-sensitivity

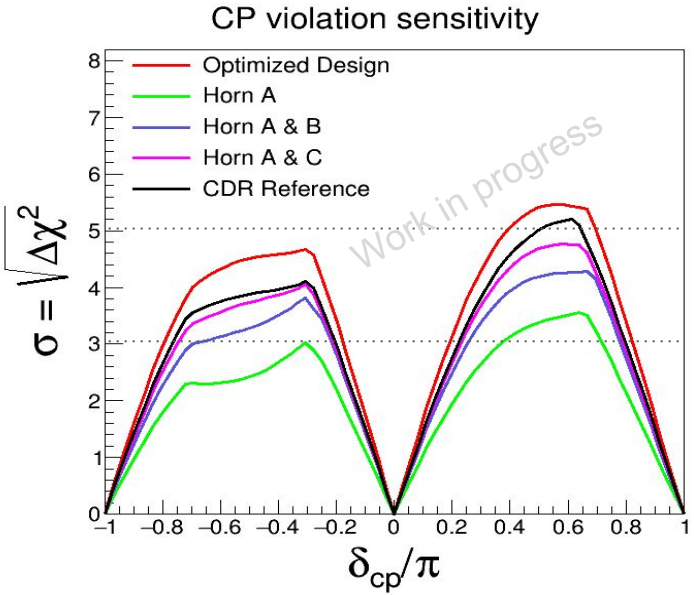

Figure 13: CP-sensitivity for potential staging configurations

★ After taking out horn B, the sensitivity is still comparable to the CDR reference design

★ Running design with horns A&C leads to a 0.05 loss in 75% CP sensitivity

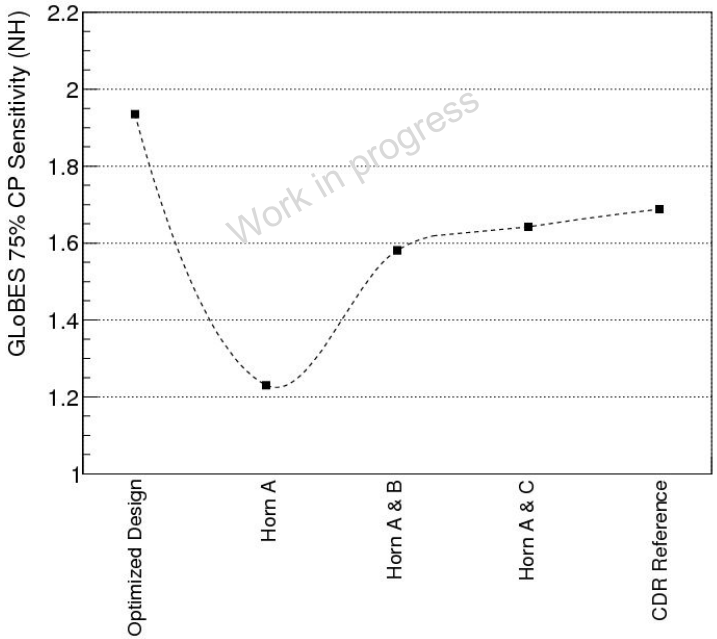

Figure 14: 75% CP-sensitivity for different positions of Horn C along the beamline

Current/future work: Target optimization

DEEP UNDERGROUND NEUTRINO EXPERIMENT

NuMI-style target

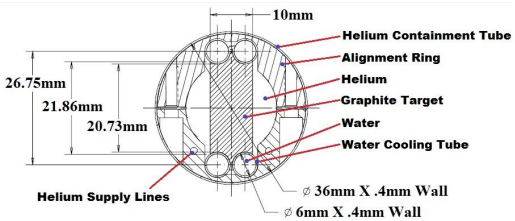

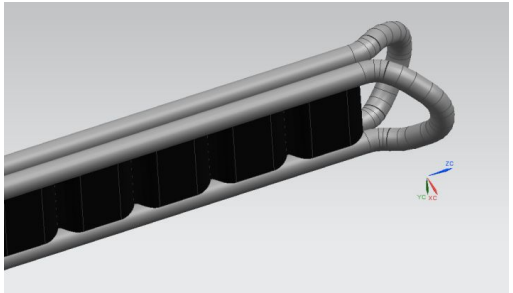

Fig 15ab: NuMI-style target

Rutherford long target concept

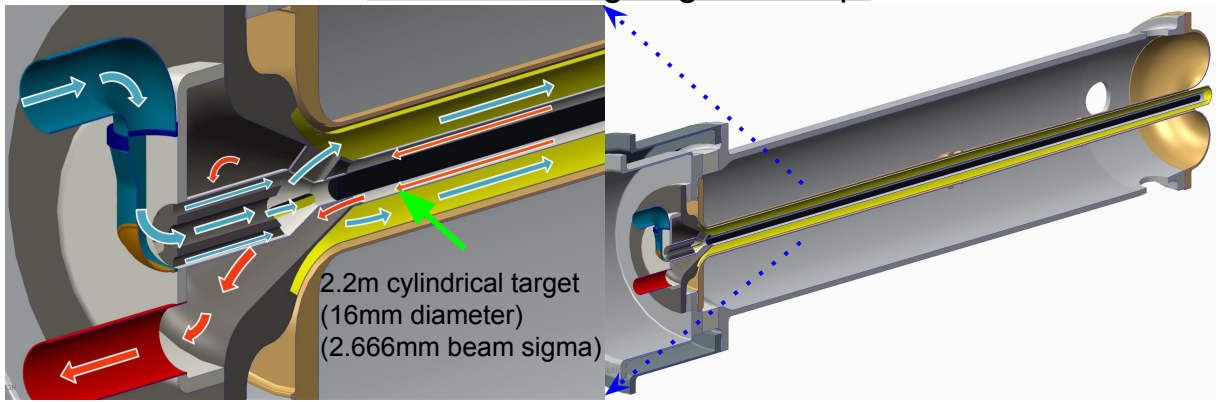

Fig 16ab: RAL-target (DUNE collaboration)

➔ Advantages:

- No water cooling lines, only helium containment tubes (Operation possible at higher temperatures)
- Upgradeable to a 2.4 MW program
- Possible increase in physics performance

Summary

- Fine-tuning the optimization process (Horn C, 30 cm upstream)
- Optimized engineered design provides higher CP-sensitivity than the CDR reference design
- Staged design with horns A & C is feasible, provided it can be upgraded
- Target optimization studies on a cylindrical graphite target are ongoing

Back-up

Incorporating changes into design

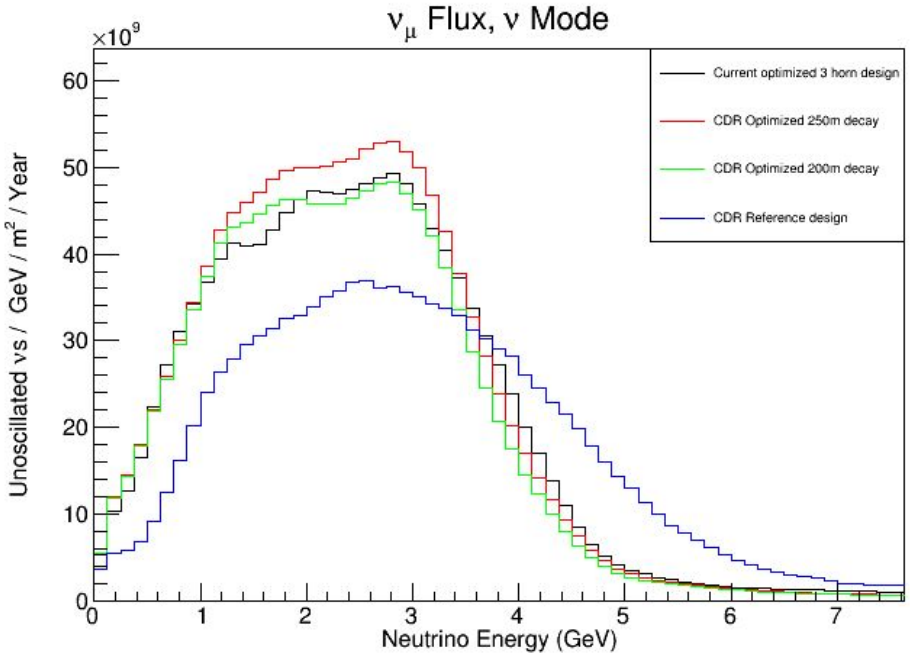

Figure 9: Neutrino flux for potential staging configurations

- ➔ Comparable flux for the CDR optimized design with a 200 m decay pipe and the current optimized three horn design
- ➔ Large improvement from the CDR reference design in the desired region of 2-3 GeV

Horn C position: Physics effects

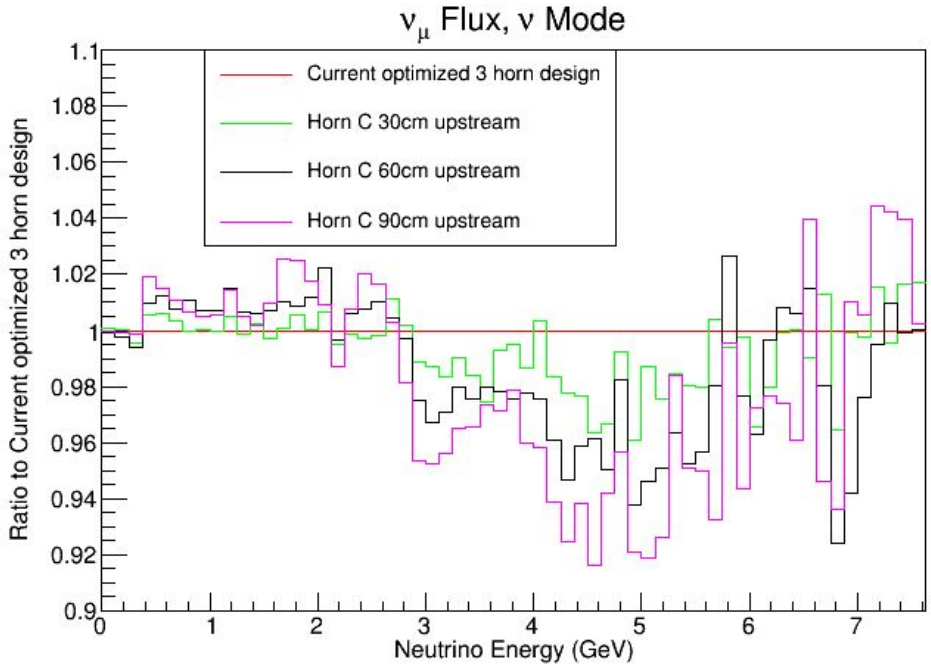

Figure 5: Neutrino flux ratios for different positions of Horn C along the beamline

- ★ Moving Horn C upstream decreases the neutrino flux in the 3-6 GeV range
- ★ Keep in mind: Very small difference (5% level)

Target positions: Physics effects

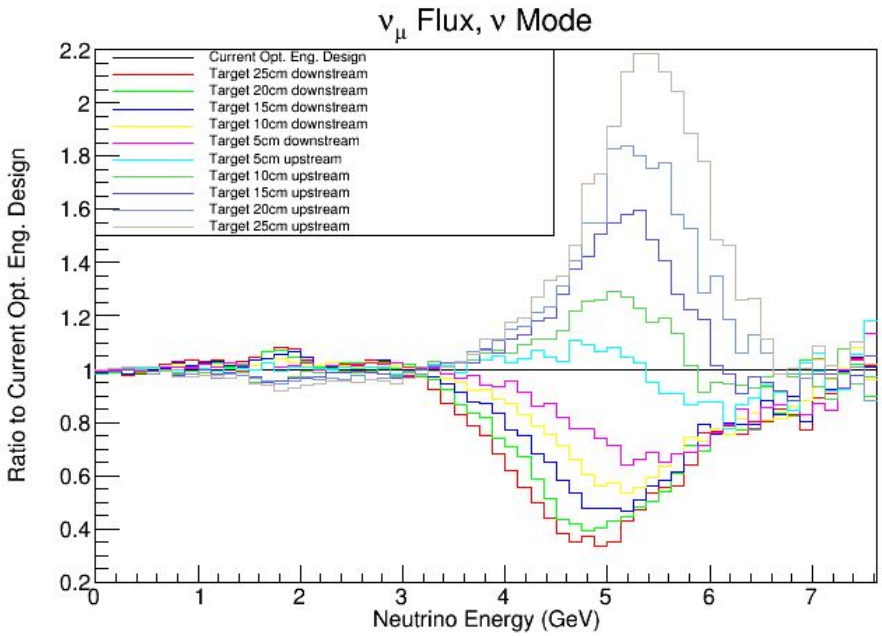

Figure 7: Neutrino flux ratios for different target positions along the beamline

- ★ Moving target upstream causes a flux increase in the higher energy range (4-6 GeV) and a decrease in the lower energy range (1-3 GeV)
- ★ Vice versa: for moving the target downstream