ADMX - the Axion Dark Matter eXperiment

Daniel Bowring, on behalf of the ADMX collaboration

APS-DPF 2017

31 July 2017

Axions and WIMPs

WIMPs scatter as quanta

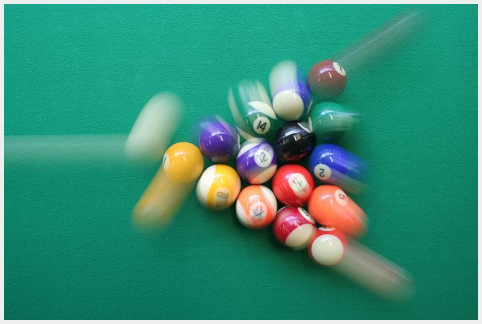

- WIMP-nucleon scattering detector strategies
- Mass $\sim$ 10s-100s of GeV?

Axions scatter as classical waves

- Coherently oscillating “clouds”
- $h/p \sim 100$ m
- Phase coherent signals $\sim$ ms.
- μev $< m_a <$ meV

Axion mass is only loosely constrained by theory/measurement.

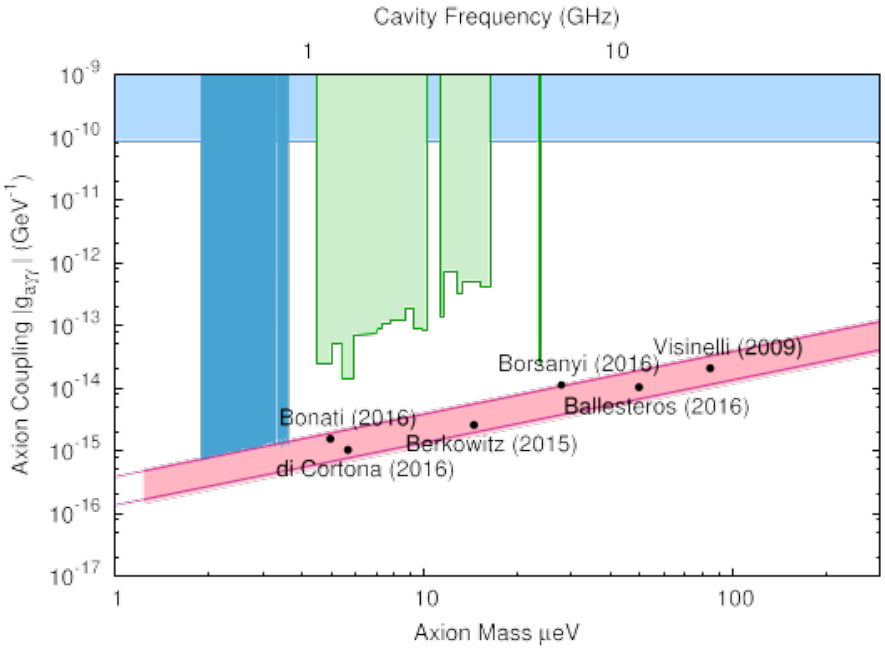

- $\mathcal{L}_{a\gamma\gamma} = g_{a\gamma\gamma} a \mathbf{E} \cdot \mathbf{B}$
- DFSZ model for $a \to \gamma\gamma$ detection relevant to DM axions. Points are predictions from theory.
- **ADMX has demonstrated DFSZ-compatible sensitivity.**

Signal power and SNR drive haloscope design.

$$P \approx 0.5 \times 10^{-21}\ \mathrm{W} \cdot \left(\frac{\rho_a}{0.5 \times 10^{-21}\ \mathrm{g \cdot cm^3}}\right)\left(\frac{f_a}{1\ \mathrm{GHz}}\right)$$
$$\times \left(\frac{g_{a\gamma\gamma}}{0.36}\right)^2 \left(\frac{V}{500\ \mathrm{L}}\right)\left(\frac{B}{7\ \mathrm{T}}\right)^2 \left(\frac{\min(Q_c, Q_a)}{10^5}\right) C$$

Dicke radiometer equation explains design constraints:

$$SNR = \frac{P}{kT_s}\sqrt{\frac{t}{\Delta f}}$$

- Signal power is limited: $P \propto B^2 V$
- $t \lesssim 100$ s for realistic run schedules
- System noise temperature $T_s = T_{\mathrm{phys}} + T_N$
- At the quantum limit, $T_N \to 48$ mK at 1 GHz

Signal power and SNR drive haloscope design.

$$P \approx 0.5 \times 10^{-21}\ \mathrm{W} \cdot \left(\frac{\rho_a}{0.5 \times 10^{-21}\ \mathrm{g \cdot cm^3}}\right)\left(\frac{f_a}{1\ \mathrm{GHz}}\right)$$
$$\times \left(\frac{g_{a\gamma\gamma}}{0.36}\right)^2 \left(\frac{V}{500\ \mathrm{L}}\right)\left(\frac{B}{7\ \mathrm{T}}\right)^2 \left(\frac{\min(Q_c, Q_a)}{10^5}\right) C$$

Dicke radiometer equation explains design constraints:

$$SNR = \frac{P}{kT_s}\sqrt{\frac{t}{\Delta f}}$$

- Signal power is limited: $P \propto B^2 V$
- $t \lesssim 100$ s for realistic run schedules
- System noise temperature $T_s = T_{\mathrm{phys}} + T_N$
- At the quantum limit, $T_N \to 48$ mK at 1 GHz

Signal power and SNR drive haloscope design.

$$P \approx 0.5 \times 10^{-21}\ \mathrm{W} \cdot \left(\frac{\rho_a}{0.5 \times 10^{-21}\ \mathrm{g \cdot cm^3}}\right)\left(\frac{f_a}{1\ \mathrm{GHz}}\right)$$
$$\times \left(\frac{g_{a\gamma\gamma}}{0.36}\right)^2 \left(\frac{V}{500\ \mathrm{L}}\right)\left(\frac{B}{7\ \mathrm{T}}\right)^2 \left(\frac{\min(Q_c, Q_a)}{10^5}\right) C$$

Dicke radiometer equation explains design constraints:

$$SNR = \frac{P}{kT_s}\sqrt{\frac{t}{\Delta f}}$$

- Signal power is limited: $P \propto B^2 V$
- $t \lesssim 100$ s for realistic run schedules
- System noise temperature $T_s = T_{\mathrm{phys}} + T_N$
- At the quantum limit, $T_N \to 48$ mK at 1 GHz

Signal power and SNR drive haloscope design.

$$P \approx 0.5 \times 10^{-21}\ \mathrm{W} \cdot \left(\frac{\rho_a}{0.5 \times 10^{-21}\ \mathrm{g \cdot cm^3}}\right)\left(\frac{f_a}{1\ \mathrm{GHz}}\right)$$
$$\times \left(\frac{g_{a\gamma\gamma}}{0.36}\right)^2 \left(\frac{V}{500\ \mathrm{L}}\right)\left(\frac{B}{7\ \mathrm{T}}\right)^2 \left(\frac{\min(Q_c, Q_a)}{10^5}\right) C$$

Dicke radiometer equation explains design constraints:

$$SNR = \frac{P}{kT_s}\sqrt{\frac{t}{\Delta f}}$$

- Signal power is limited: $P \propto B^2 V$
- $t \lesssim 100$ s for realistic run schedules
- System noise temperature $T_s = T_{\mathrm{phys}} + T_N$
- At the quantum limit, $T_N \to 48$ mK at 1 GHz

ADMX Overview

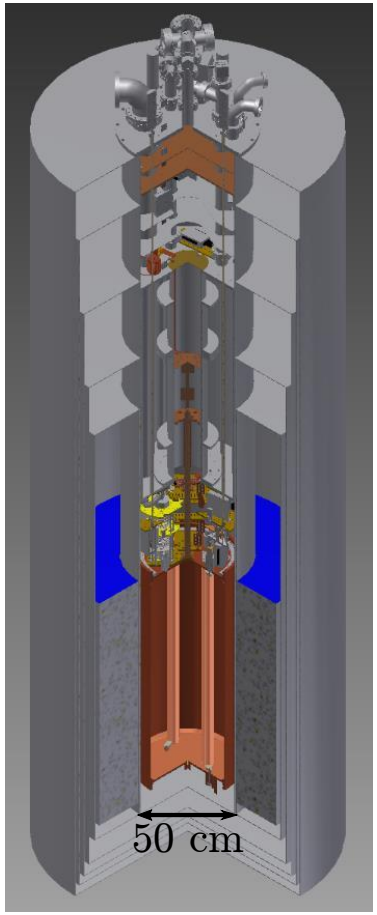

- 500 MHz - 1 GHz cavity
- 7 T solenoid
- ^{3}He-^{4}He dilution refrigerator
- SQUID amplifiers

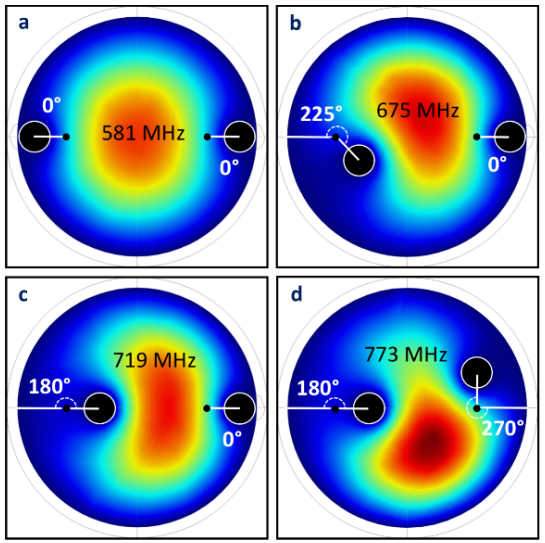

ADMX cold electronics diagram

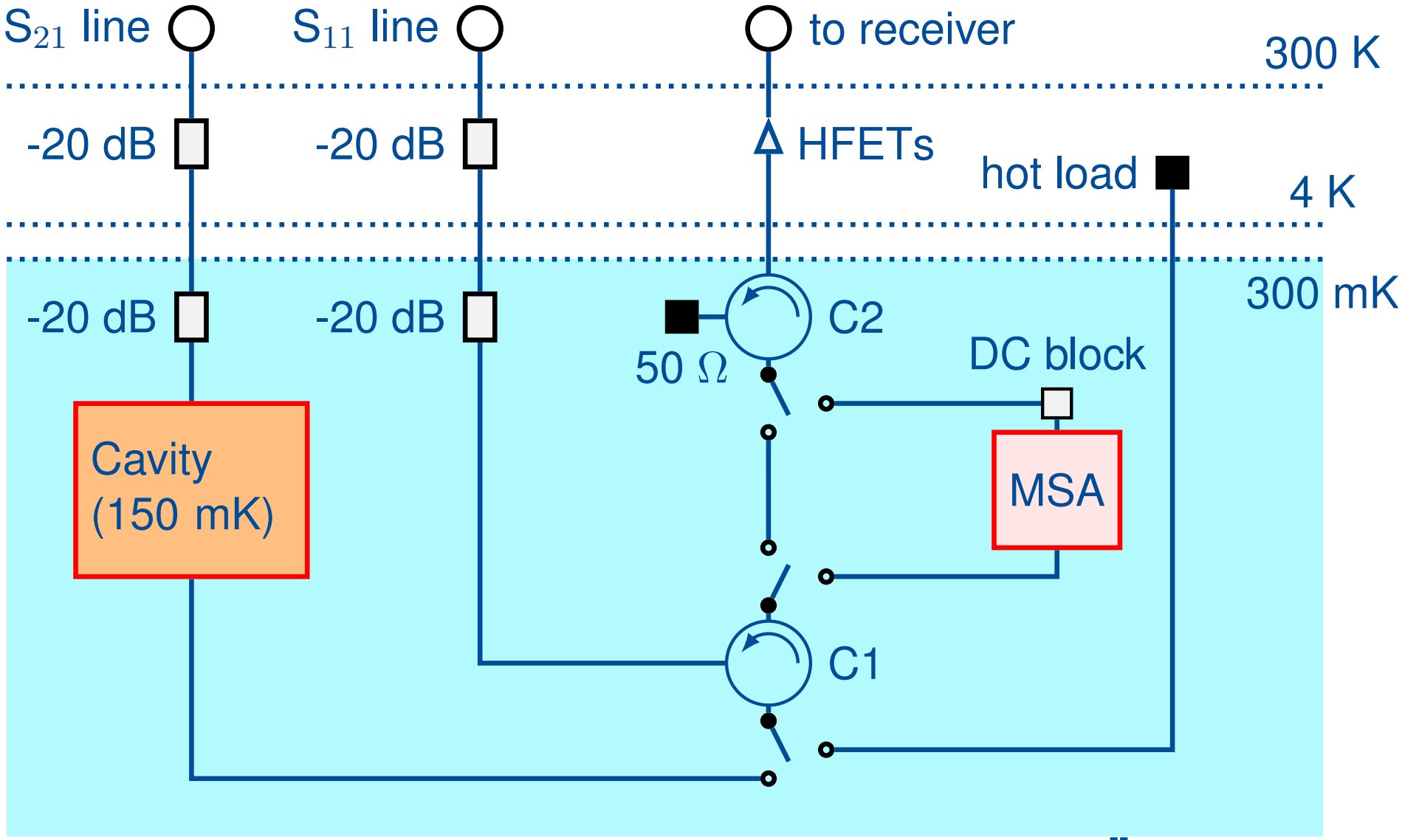

Quantum-limited amplifiers

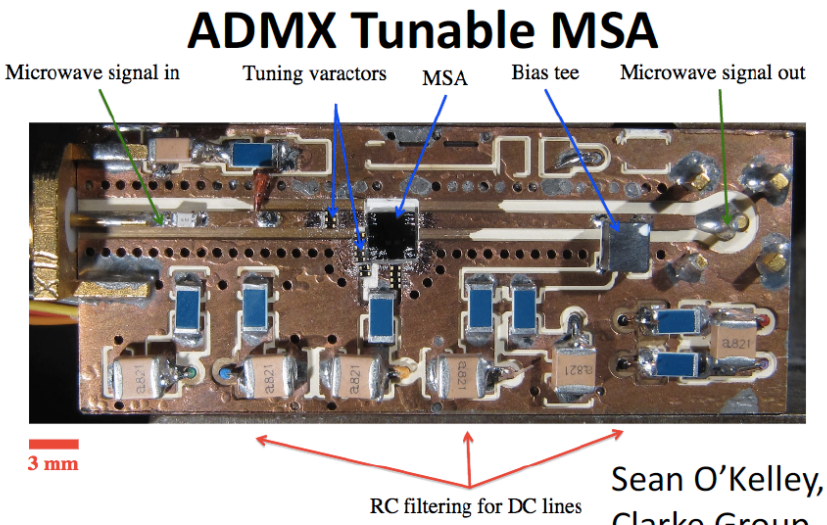

Sean O'Kelley, Clarke Group, UC Berkeley

Yanjie Qiu, Siddiqi Group, UC Berkeley

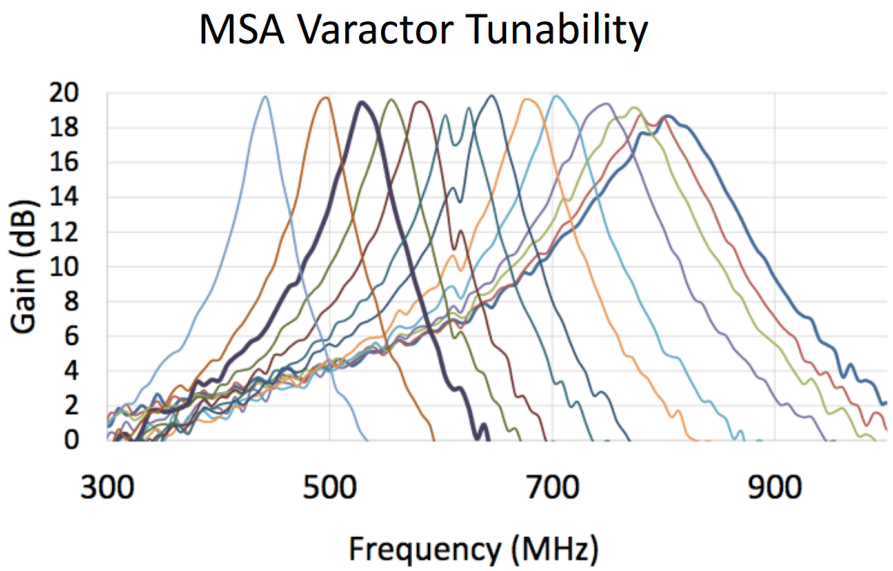

- MSA = microstrip SQUID amplifier; JPA = Josephson Parametric Amplifier
- Recall $SNR \propto 1/T_s$.

Quantum-limited amplifiers issue $\geq$ 1 photon of noise per resolved mode.

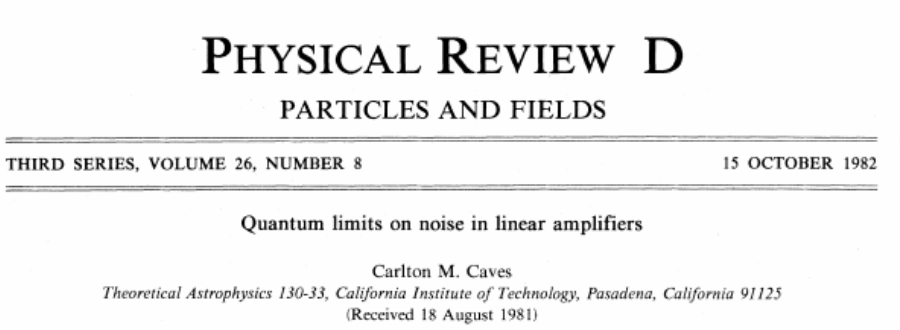

PHYSICAL REVIEW D

PARTICLES AND FIELDS

THIRD SERIES, VOLUME 26, NUMBER 8 — 15 OCTOBER 1982

Quantum limits on noise in linear amplifiers

Carlton M. Caves

Theoretical Astrophysics 130-33, California Institute of Technology, Pasadena, California 91125

(Received 18 August 1981)

C. Caves, 1982

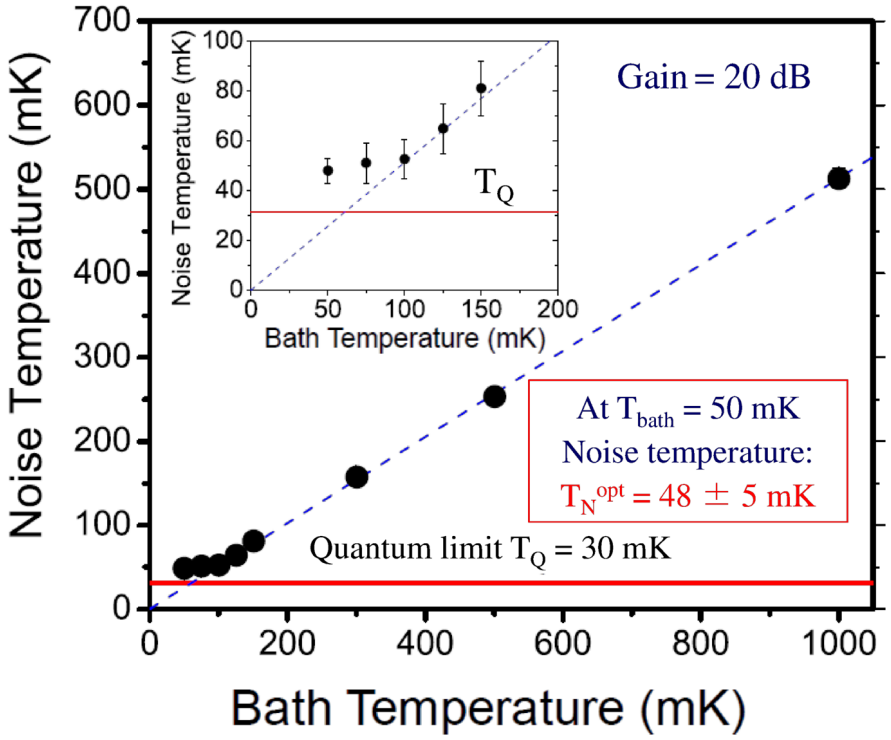

D. Kinion and J. Clarke, *Appl. Phys. Lett.* **98**, 202503 (2011).

Characterization of noise temperature

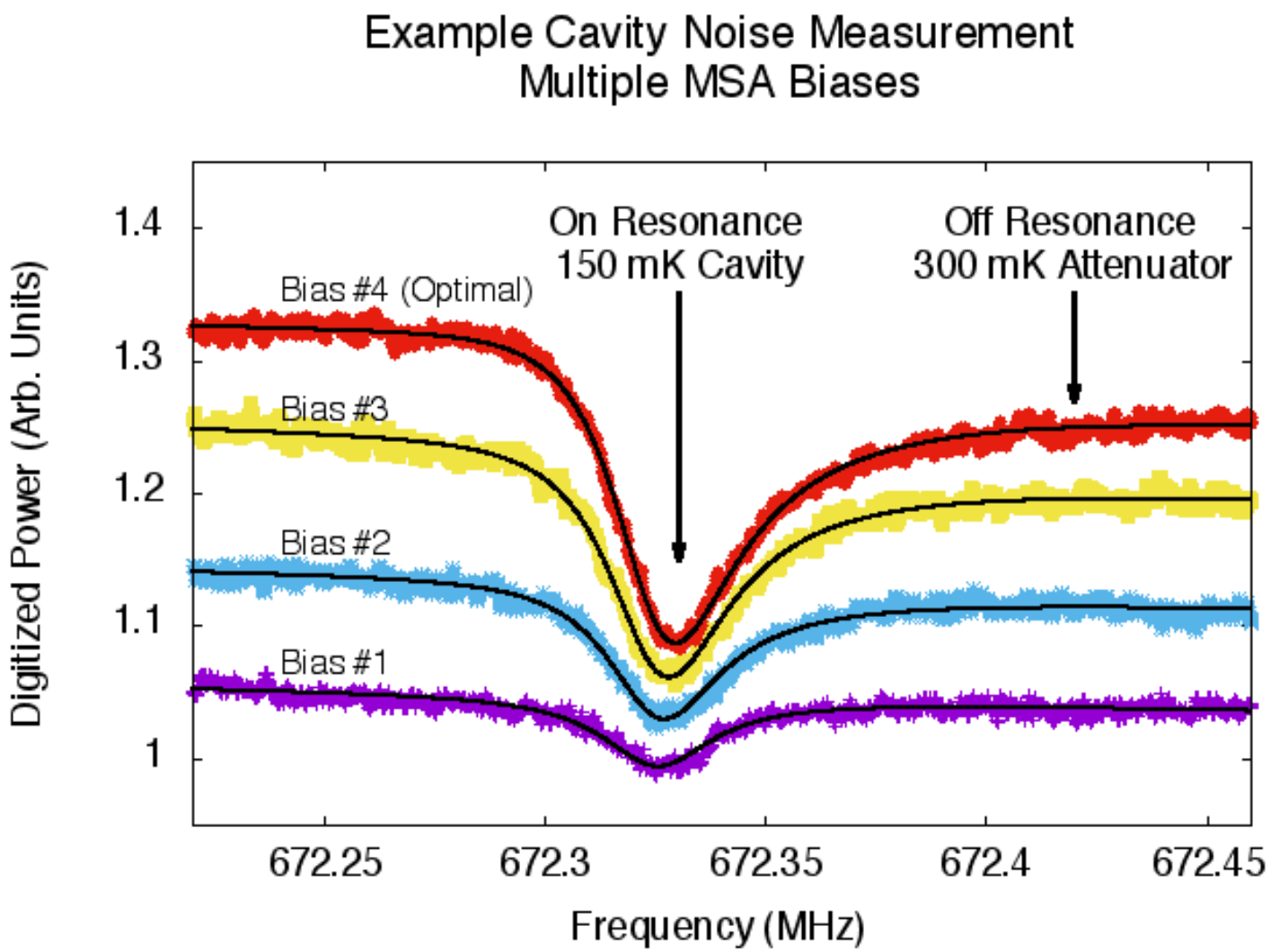

ADMX operations overview

1. Scan cavity frequency, integrate each frequency bin to desired SNR
2. Power above trigger threshold? Bin flagged as axion candidate.
3. Rescan candidates
4. Detection committee reviews persistent $> 3\sigma$ candidates:
   - Switch to resonant mode with poor axion coupling
   - Attenuate B-field (recall $P \propto B^2$)
   - Blind signal injection

First axion search at DFSZ sensitivity!

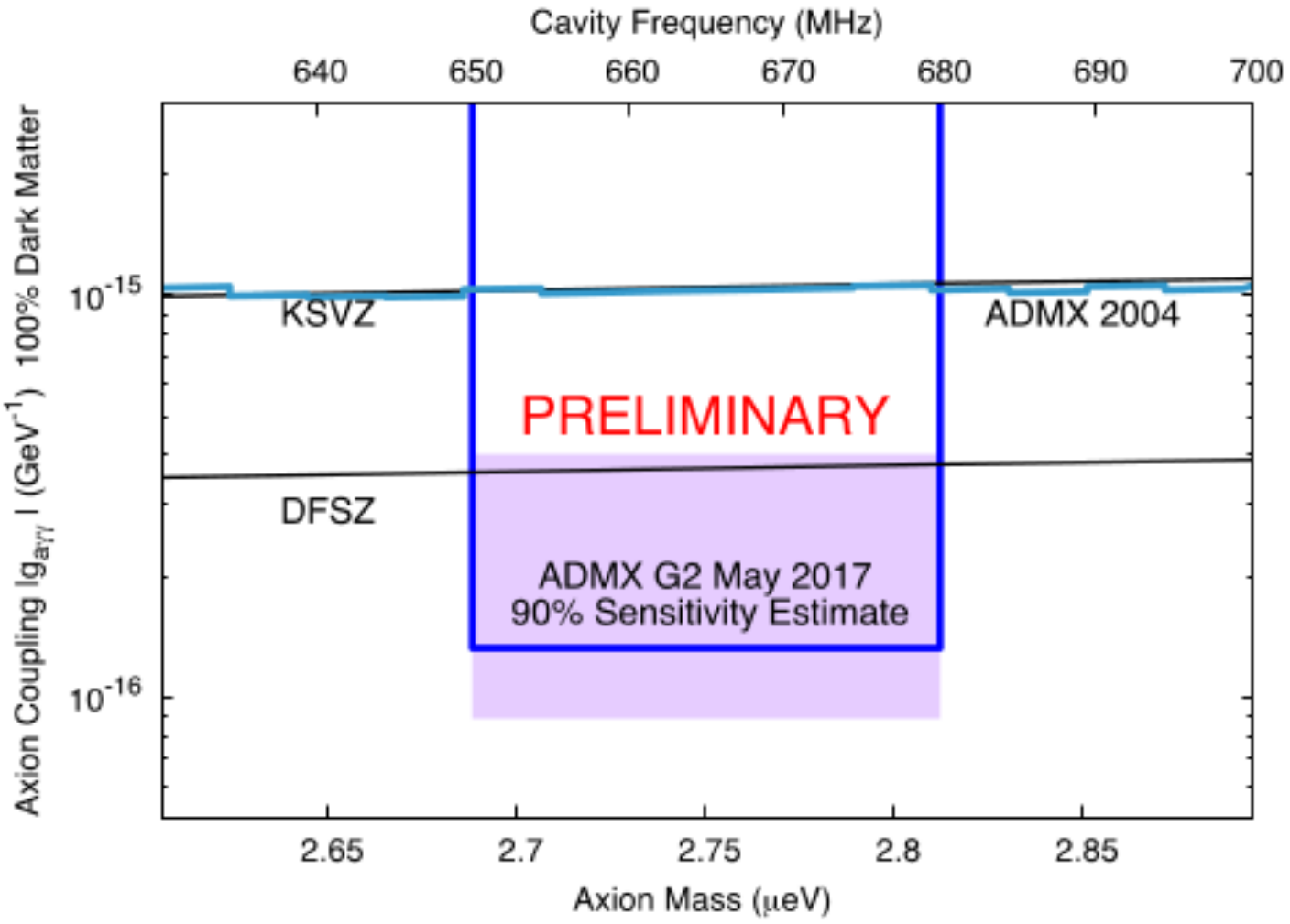

Projected ADMX-G2 discovery potential

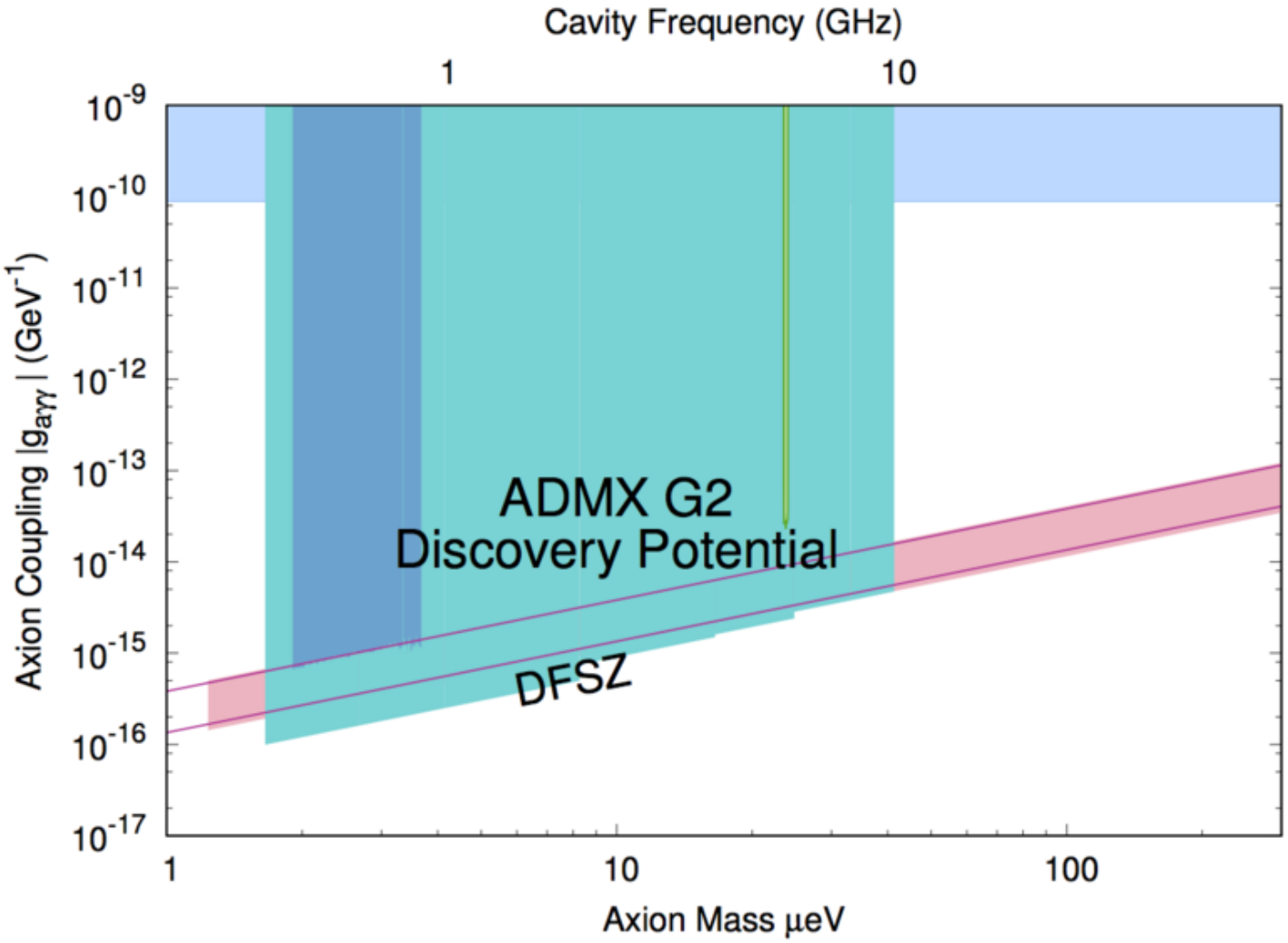

Projected ADMX-G2 discovery potential

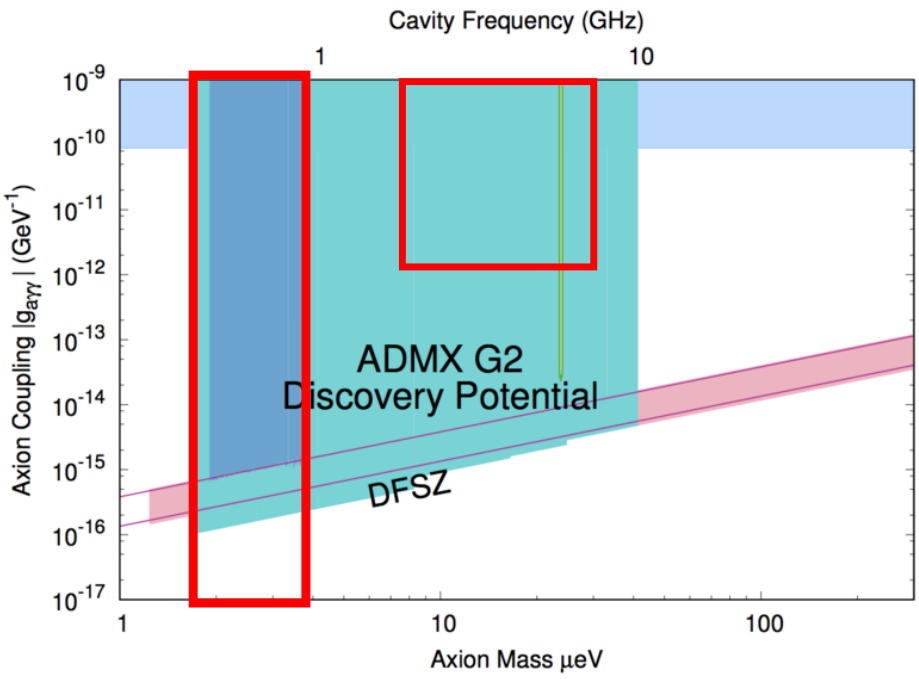

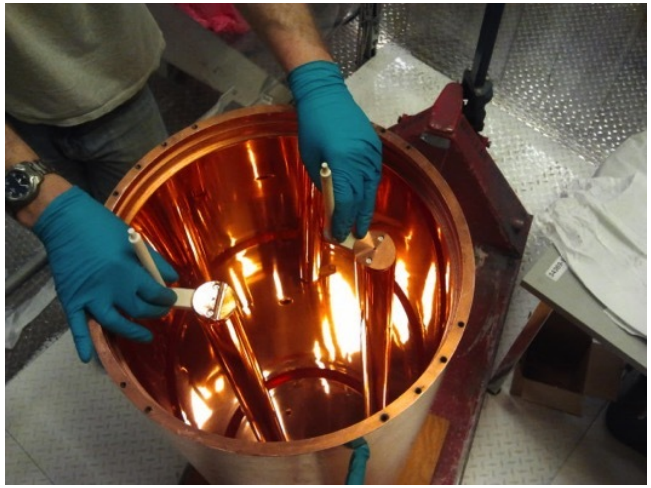

Current experiment operates at DFSZ sensitivity in 500 MHz-1 GHz range.

Projected ADMX-G2 discovery potential

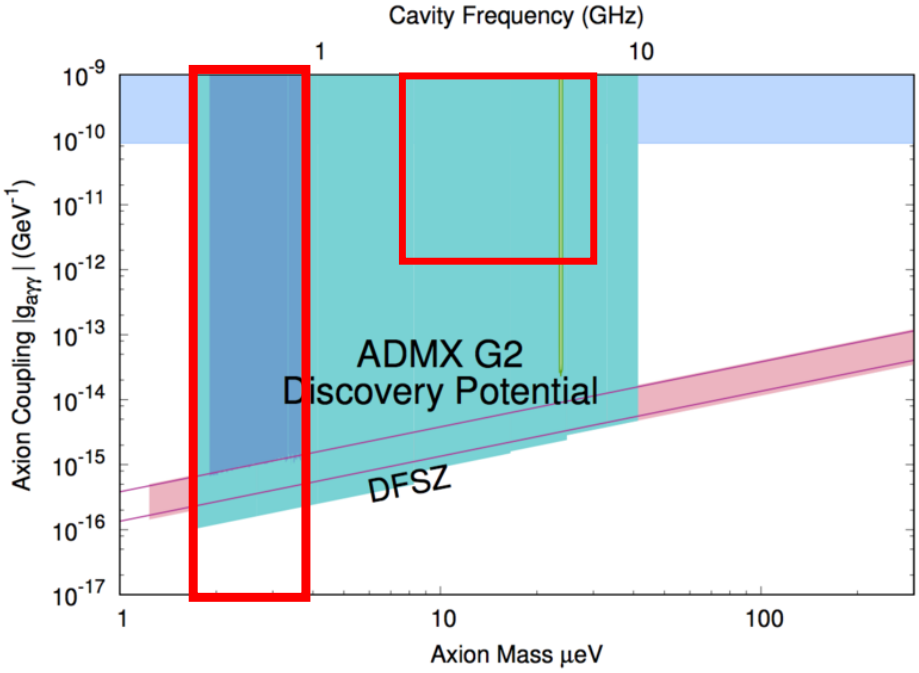

ADMX "sidecar" cavity used to test piezo tuning. TM_{010} mode can probe 4-6 GHz, TM_{020} mode can probe 6-7 GHz.

Projected ADMX-G2 discovery potential

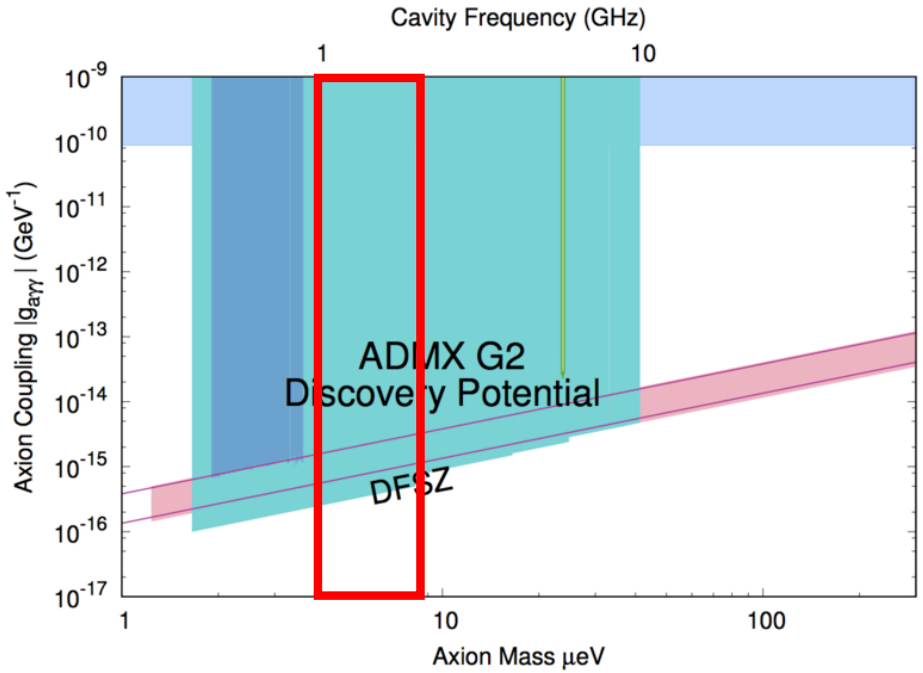

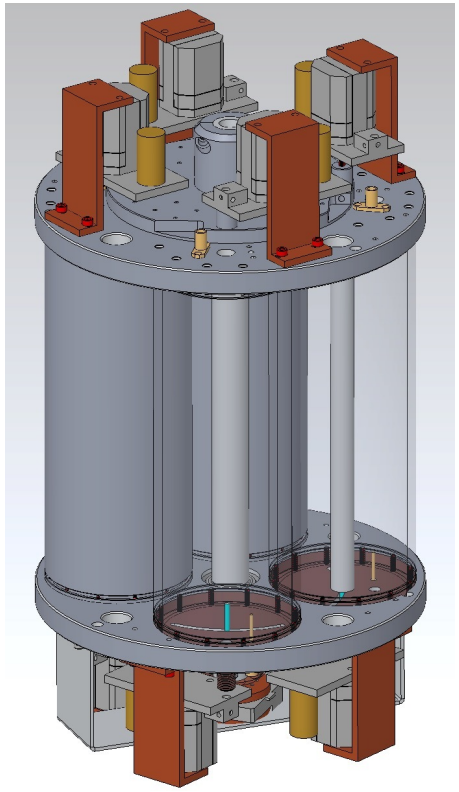

Fabrication underway for 4-cavity array, 1-2 GHz.

Fermilab

Projected ADMX-G2 discovery potential

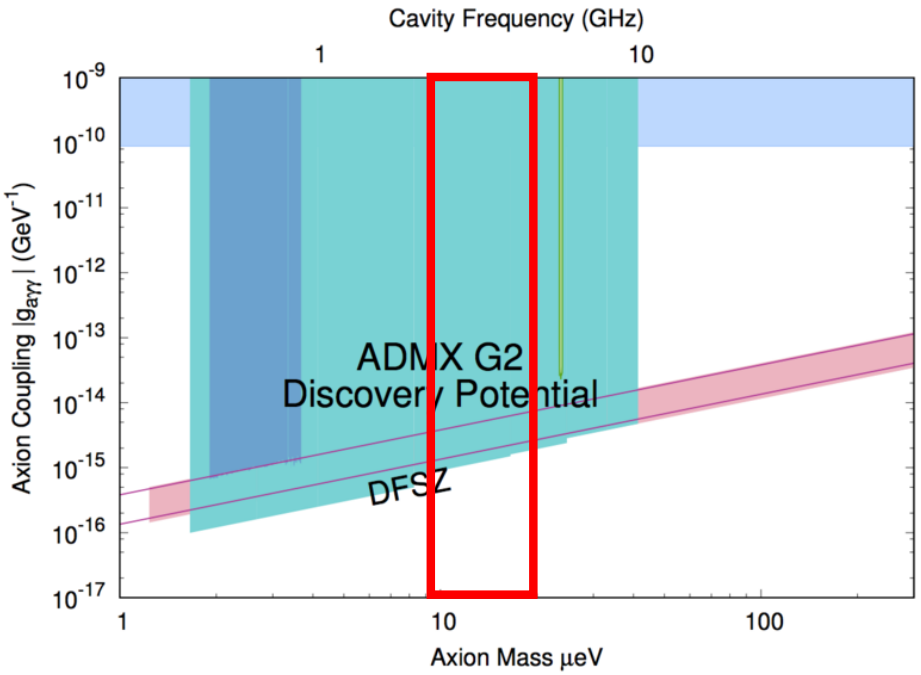

Fermilab concept for $\geq$ 2 GHz cavity.

Quantum computing technology may be the path to $\gtrsim$10 GHz searches.

Quantum nondemolition measurements with solid-state qubits allow us to count single photons, beat the standard quantum limit.

Akash Dixit, (UC student, funding from Heising-Simons Foundation, **talk on Tuesday, 1:50 pm, IARC**.

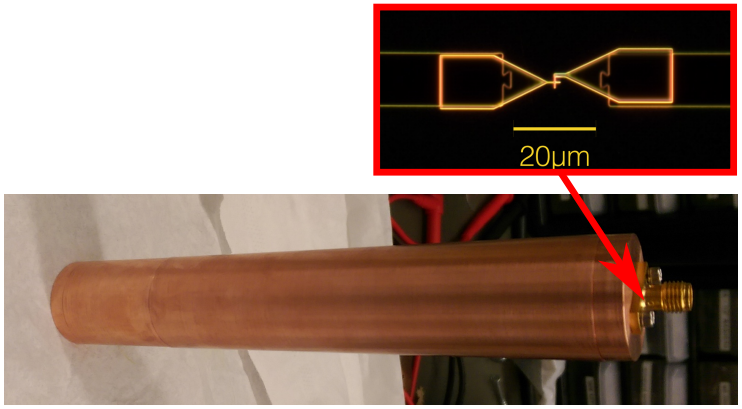

Qubit coupled to 10 GHz cavity

Please visit our new and growing lab at SiDet this Friday!

Thanks for your attention!

ADMX Collaboration: U. Washington, U. Florida, LLNL, UC-Berkeley, PNNL, LANL, NRAO, Washington U., Sheffield U., FNAL

This work is supported by U.S. Department of Energy Office of Science, Office of High Energy Physics, under awards DE-SC00098000, DE-SC0011665, DE-AC52-07NA27344, and DE-AC03-76SF00098, the Heising-Simons Foundation, and the Laboratory-Directed Research and Development programs at Fermi National Accelerator Laboratory, Lawrence Livermore National Laboratory, and Pacific Northwest National Laboratory.