June 13th Novati Measurement Summary

June 14th 2016

Taylor Shin

Bulk Bias (1903-13 vs 1903-15)

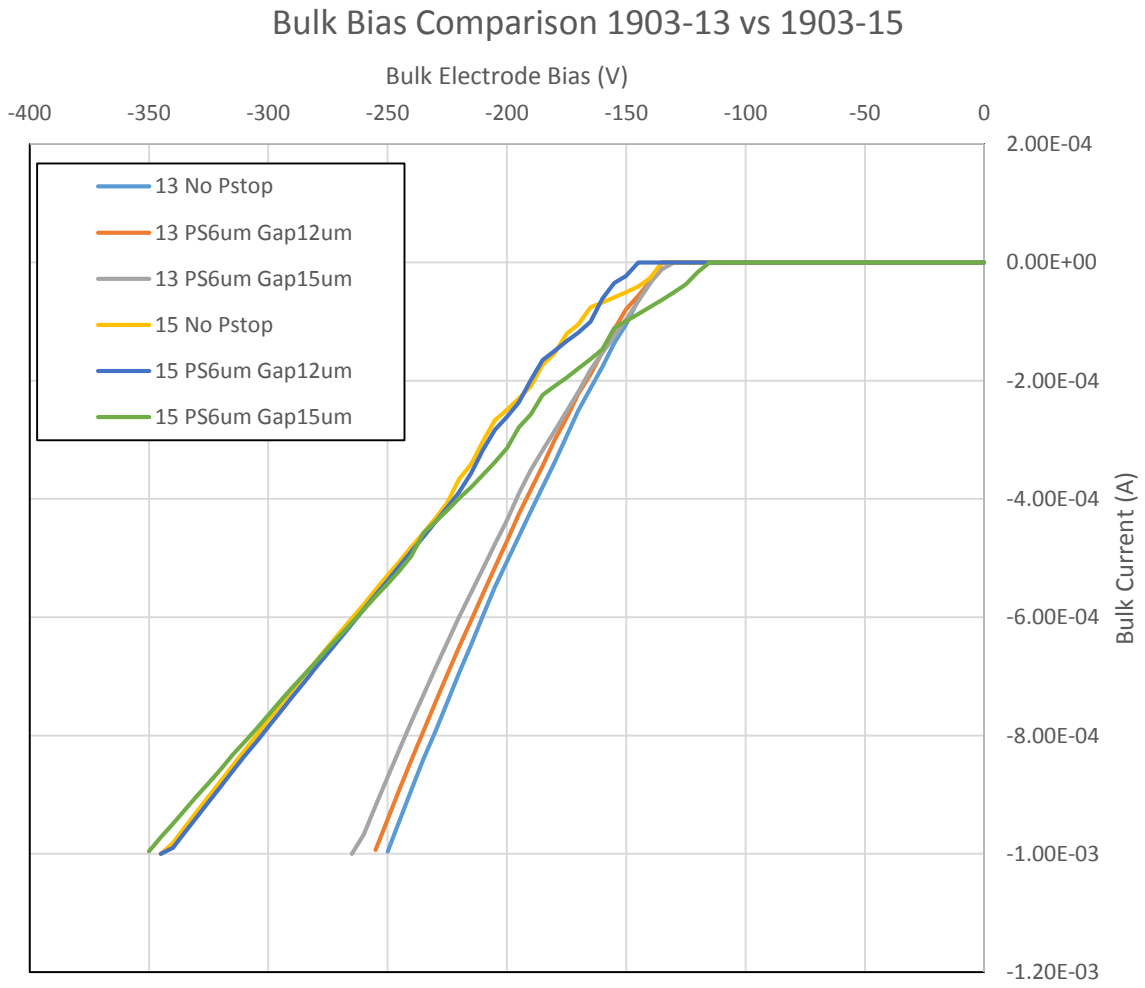

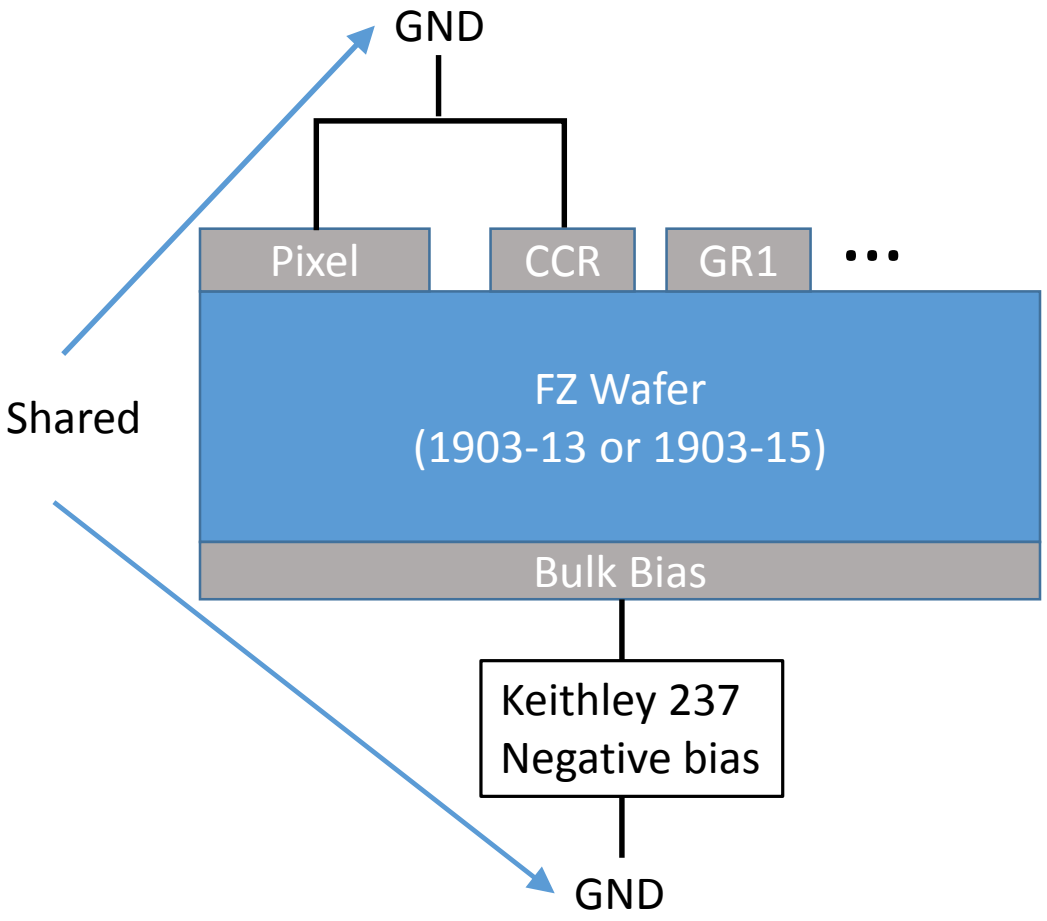

CCR-GR Lateral Bias

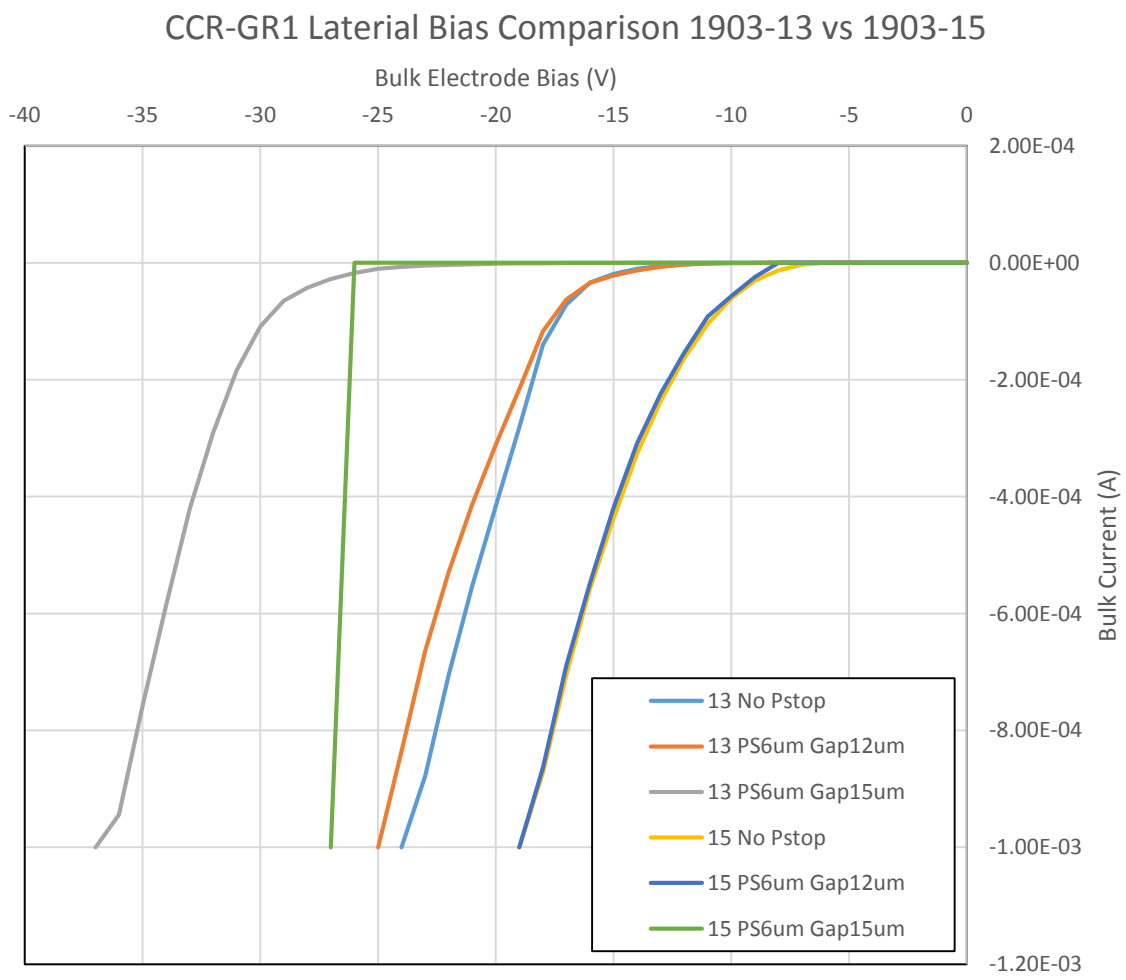

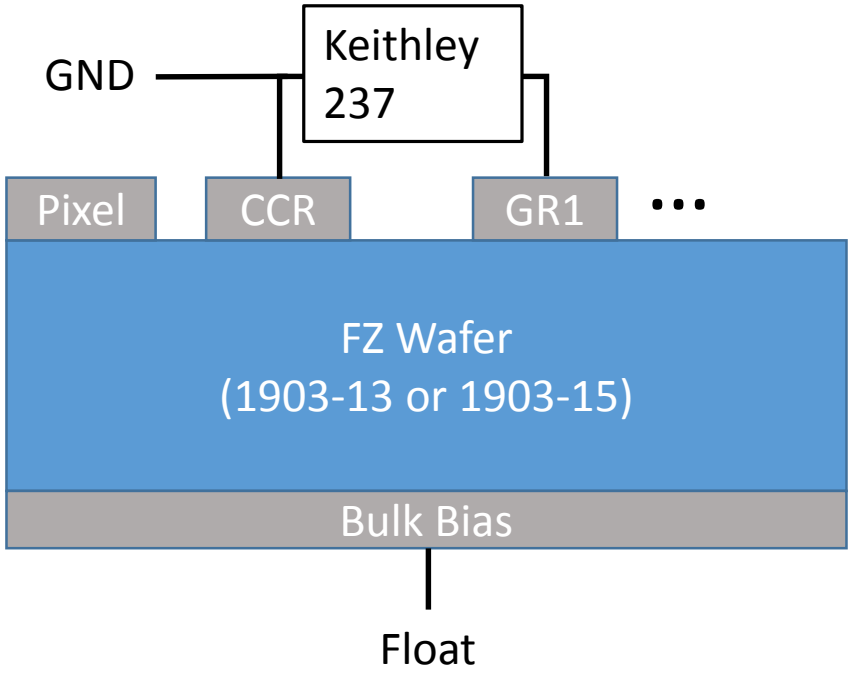

Summary

- The bulk bias test shows extremely low breakdown voltage: ~ -130 V range.
- The lateral bias test (CCR-GND GR1-Negative Bias) also shows such low breakdown is reasonable.
- To be able to sustain high voltage, we need to improve the lateral breakdown voltage ~ -65 V.
- In Simulation, we have an interesting tendency: if Qss is high, breakdown happens much easier. → Thus, we need to check C-V data to extract Qss.