1-2 GHz Cavity Array Conceptual Design

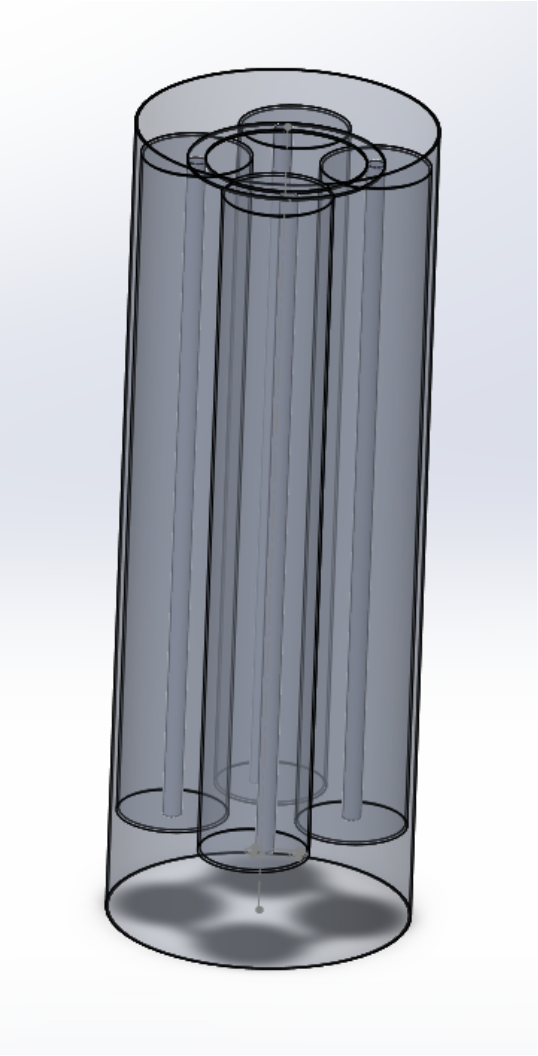

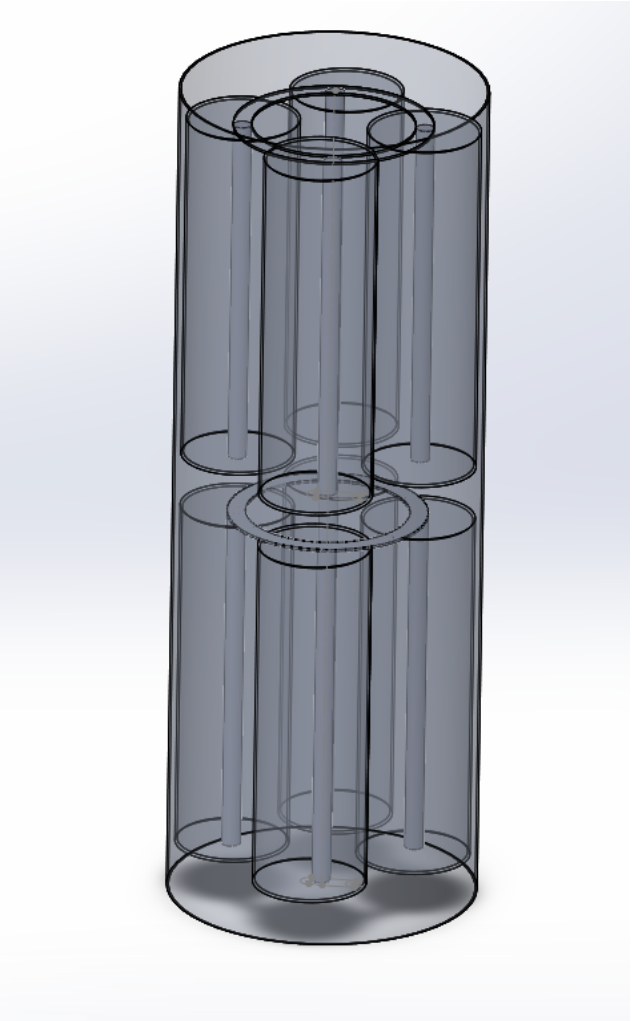

J. Gleason, N. Sullivan, D. Tanner, S. Sadashivajois

Mechanical Design Requirements / Challenges

- PDH locking will require precise coarse tuning mechanism
- Need to move 8 tuning rods equally with minimal heating and mechanical complexity
- No gaps would be nice

Classical tuning rod scheme

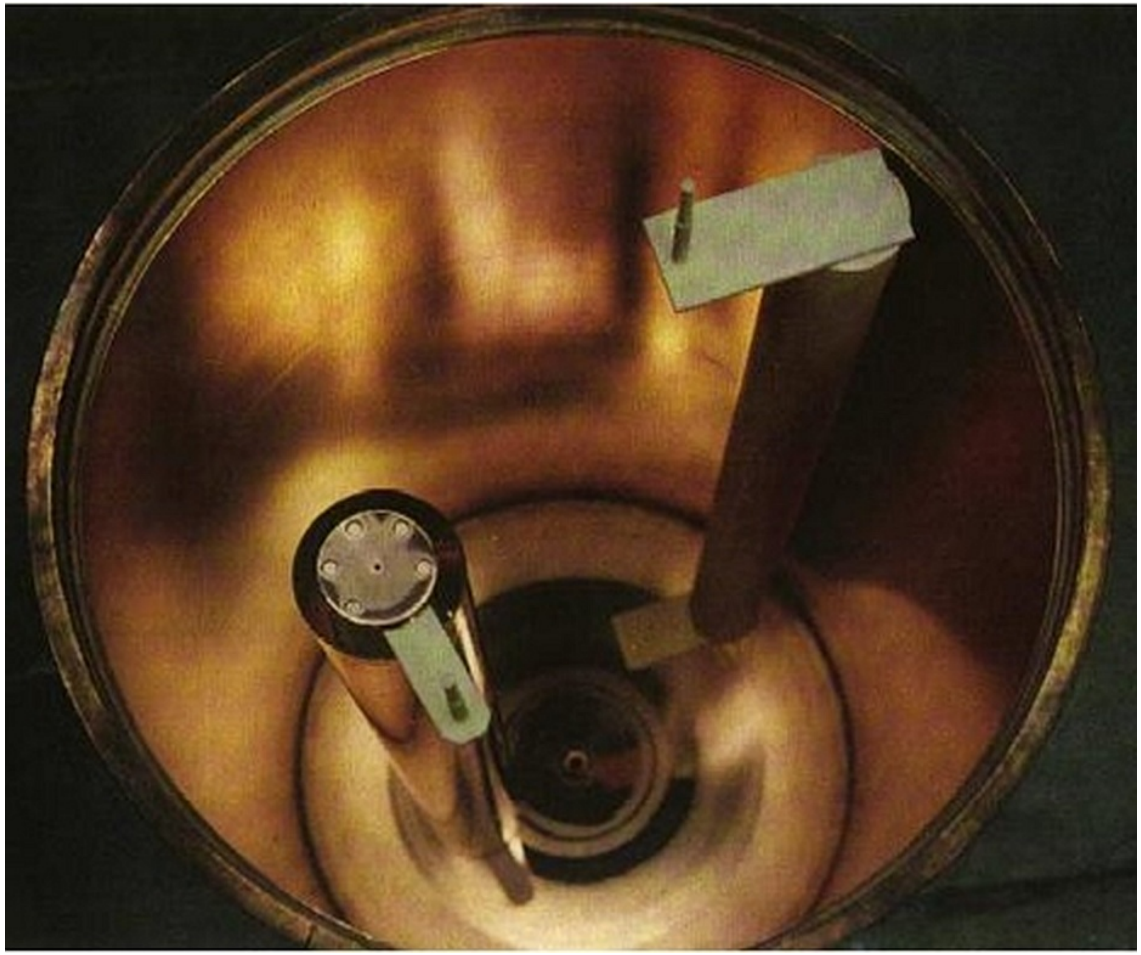

Ideal Tunable Cavity

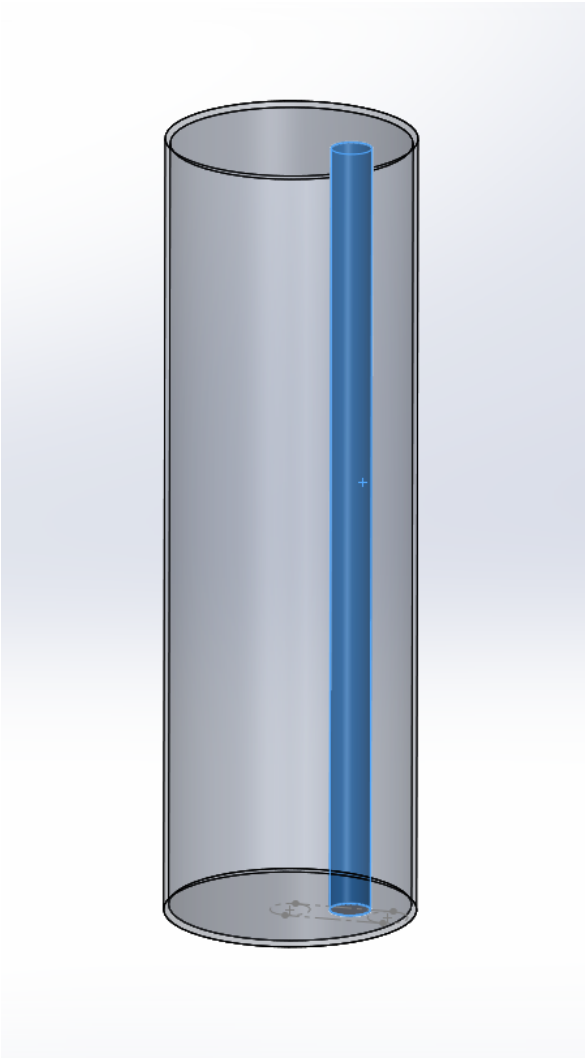

Rod Actuation

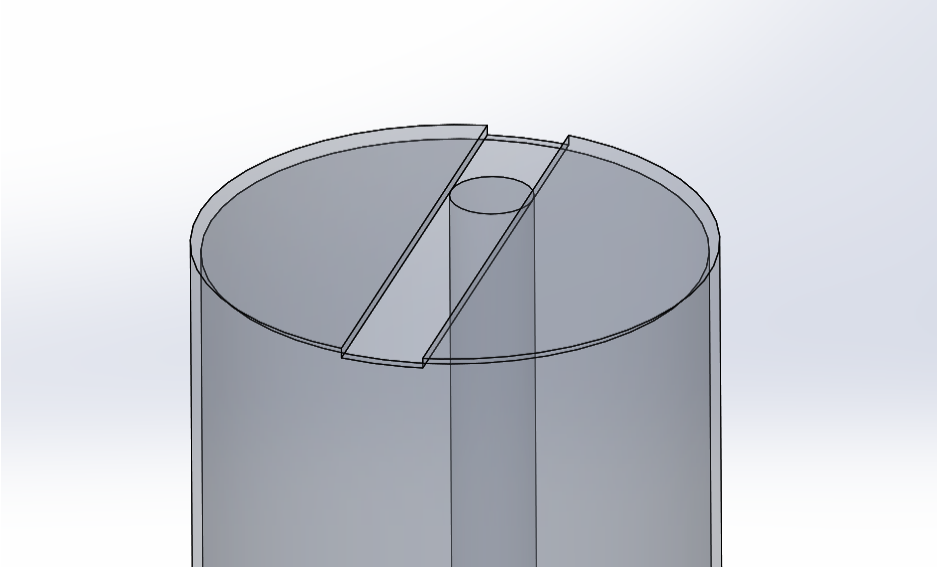

Rod Actuation

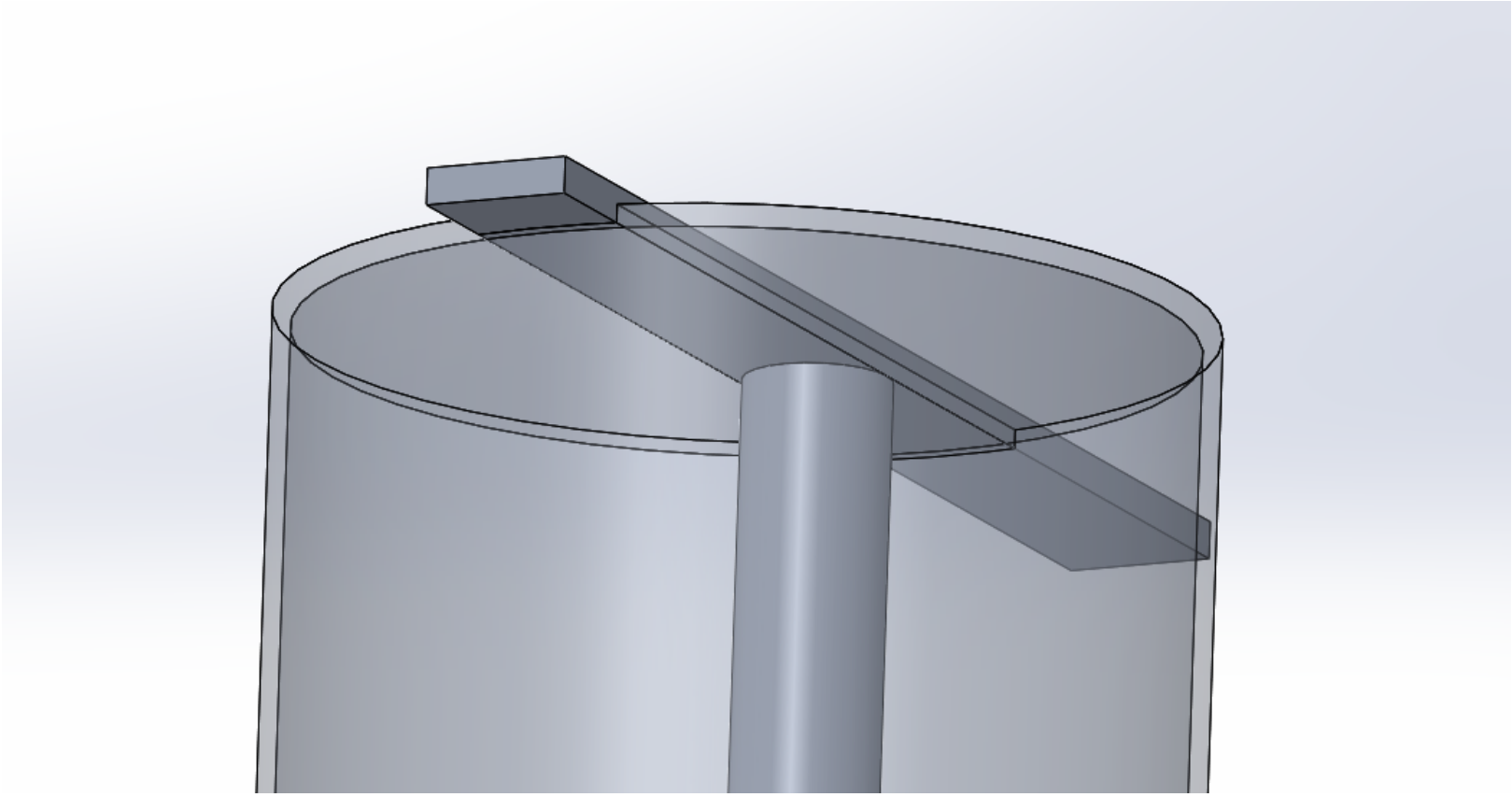

Wheel Concept

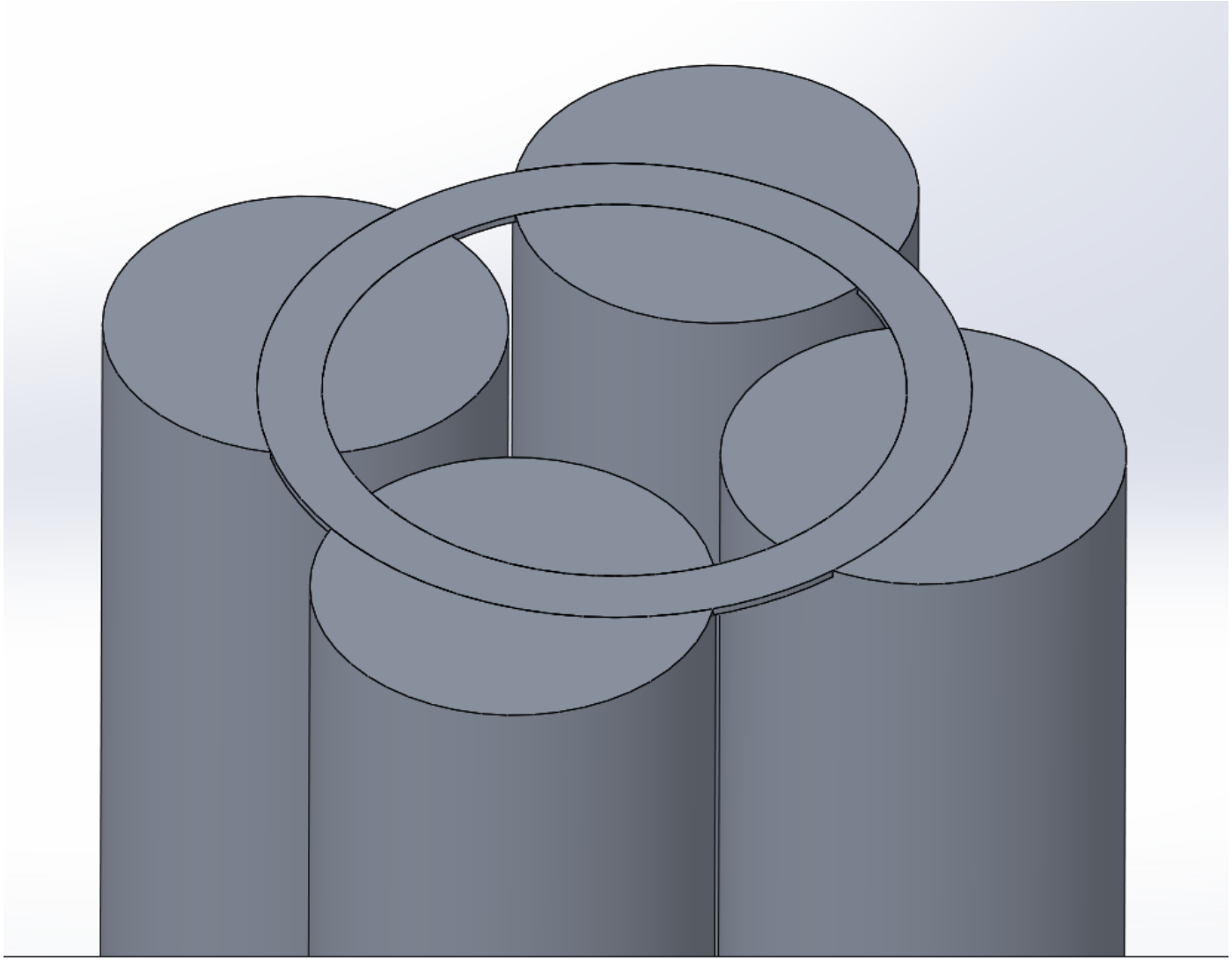

Wheel Concept

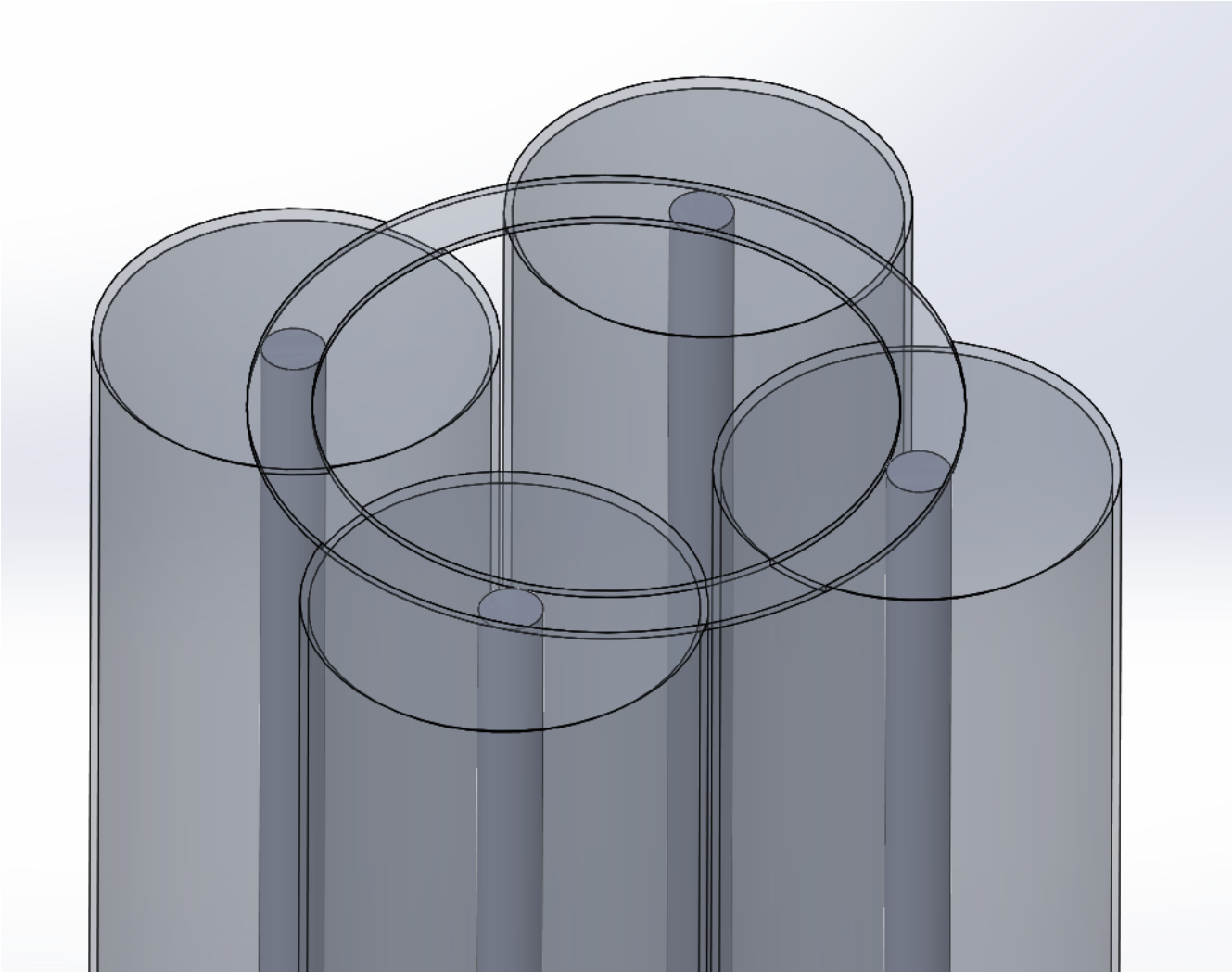

Top Plate Prototype

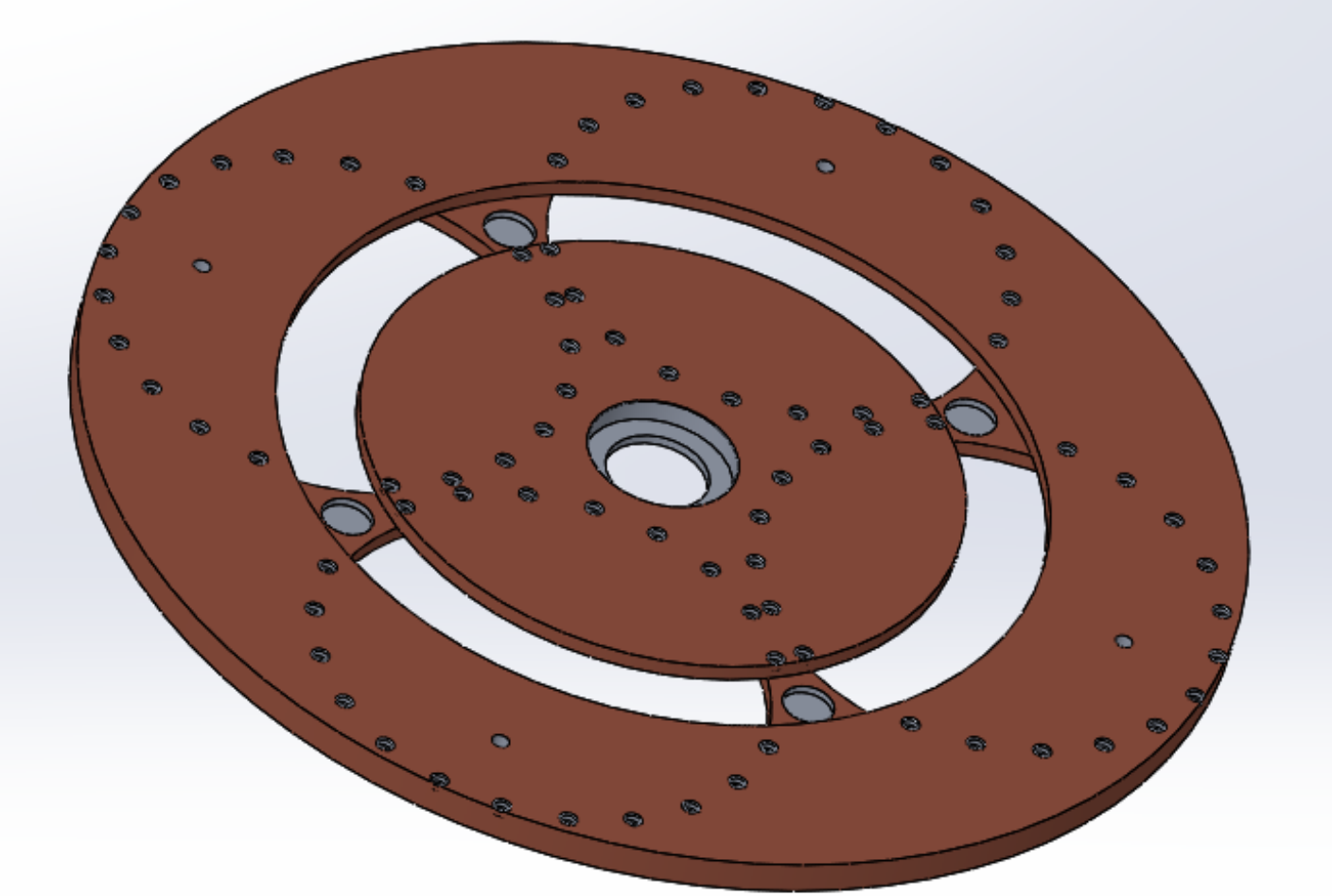

Top Plate Prototype

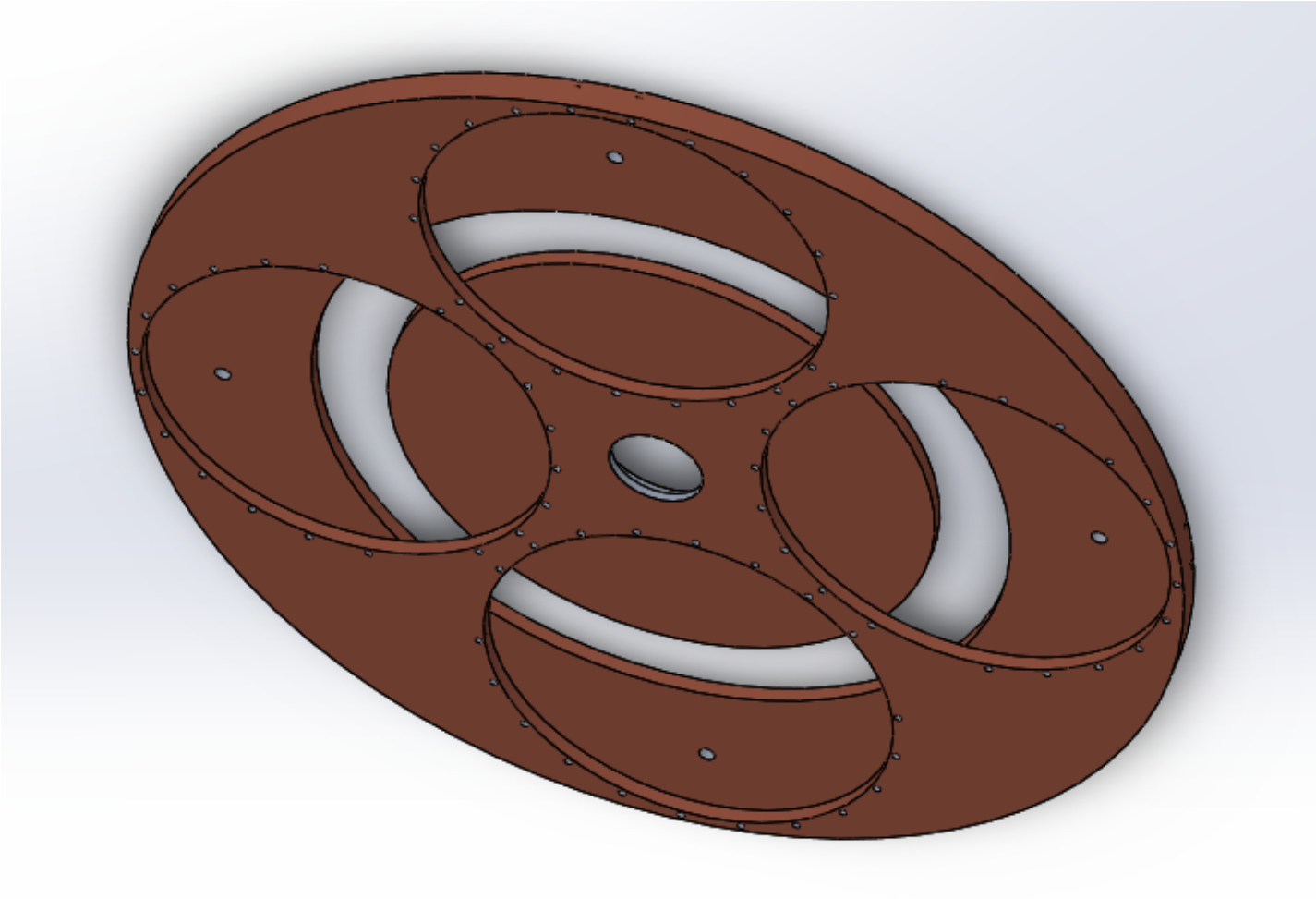

Top Plate Assembly

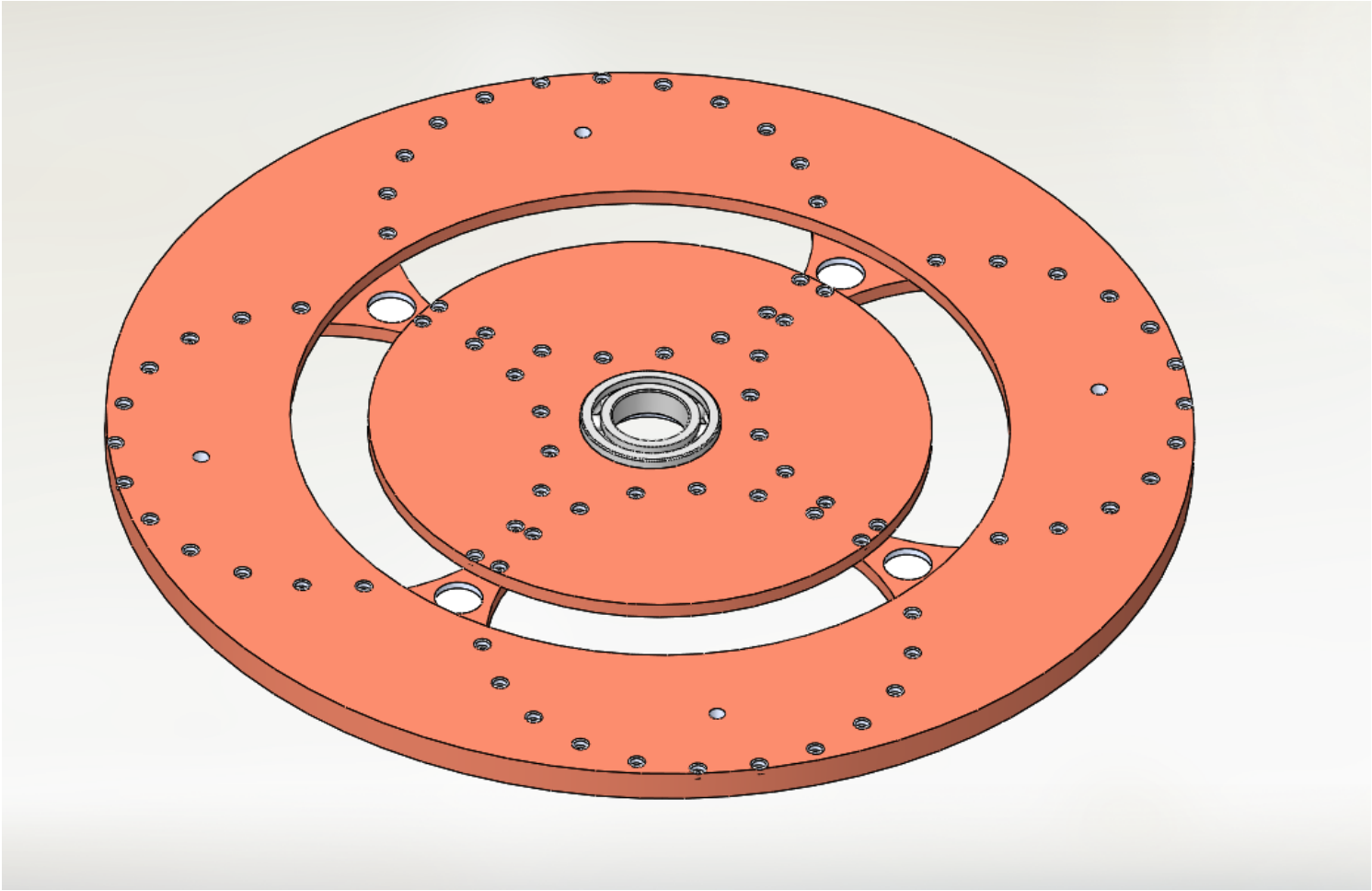

Top Plate Assembly

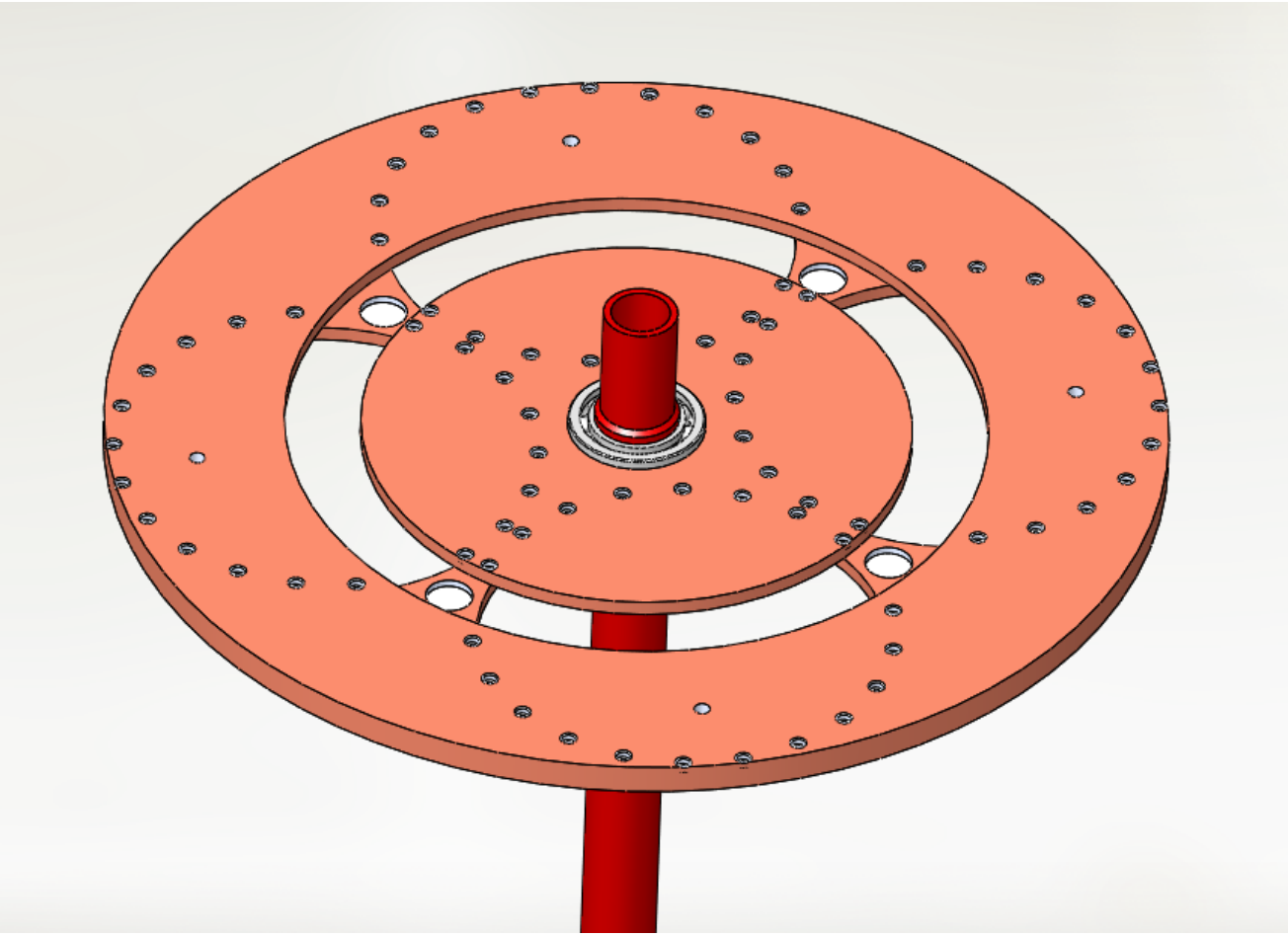

Wheel Assembly

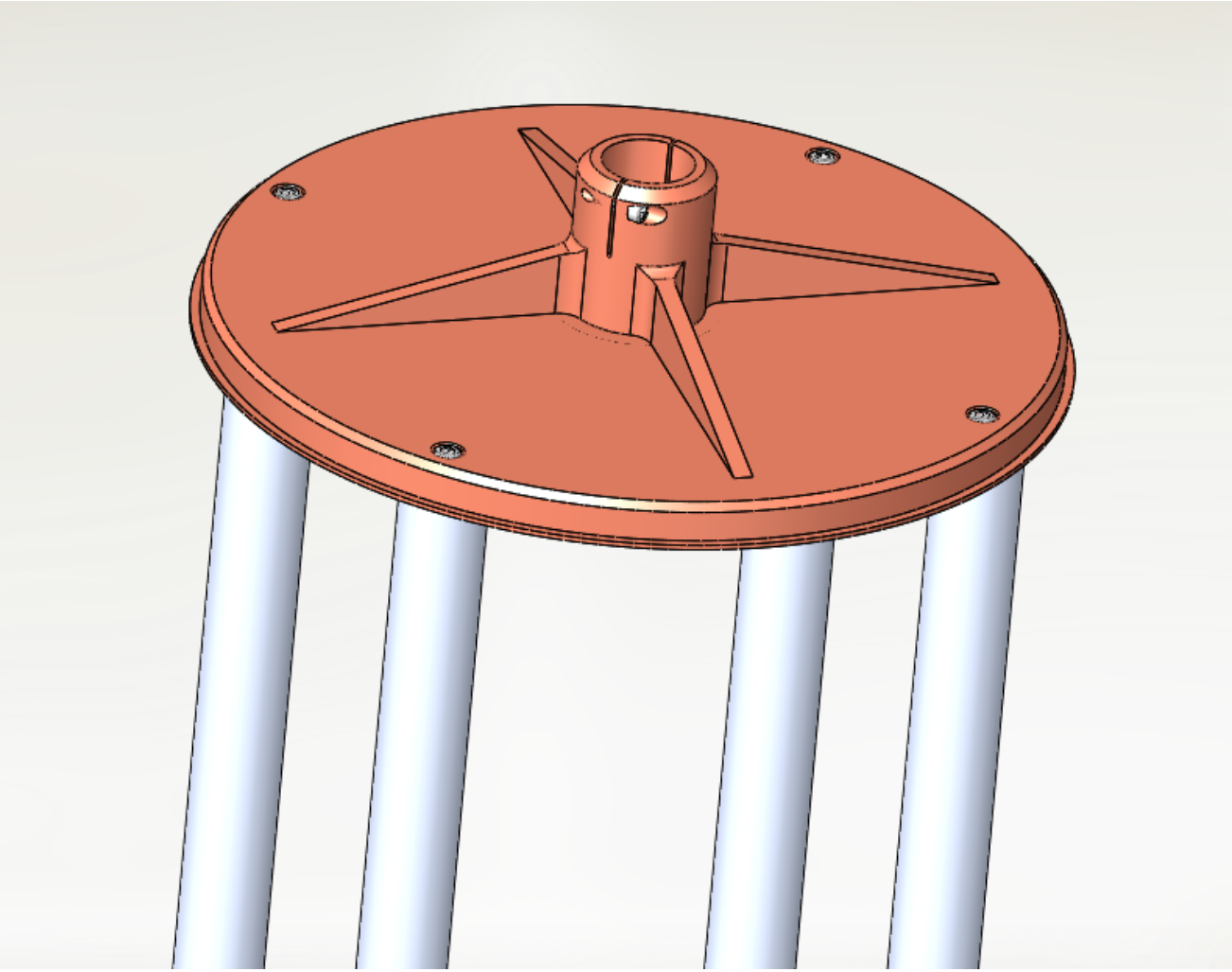

Wheel Assembly

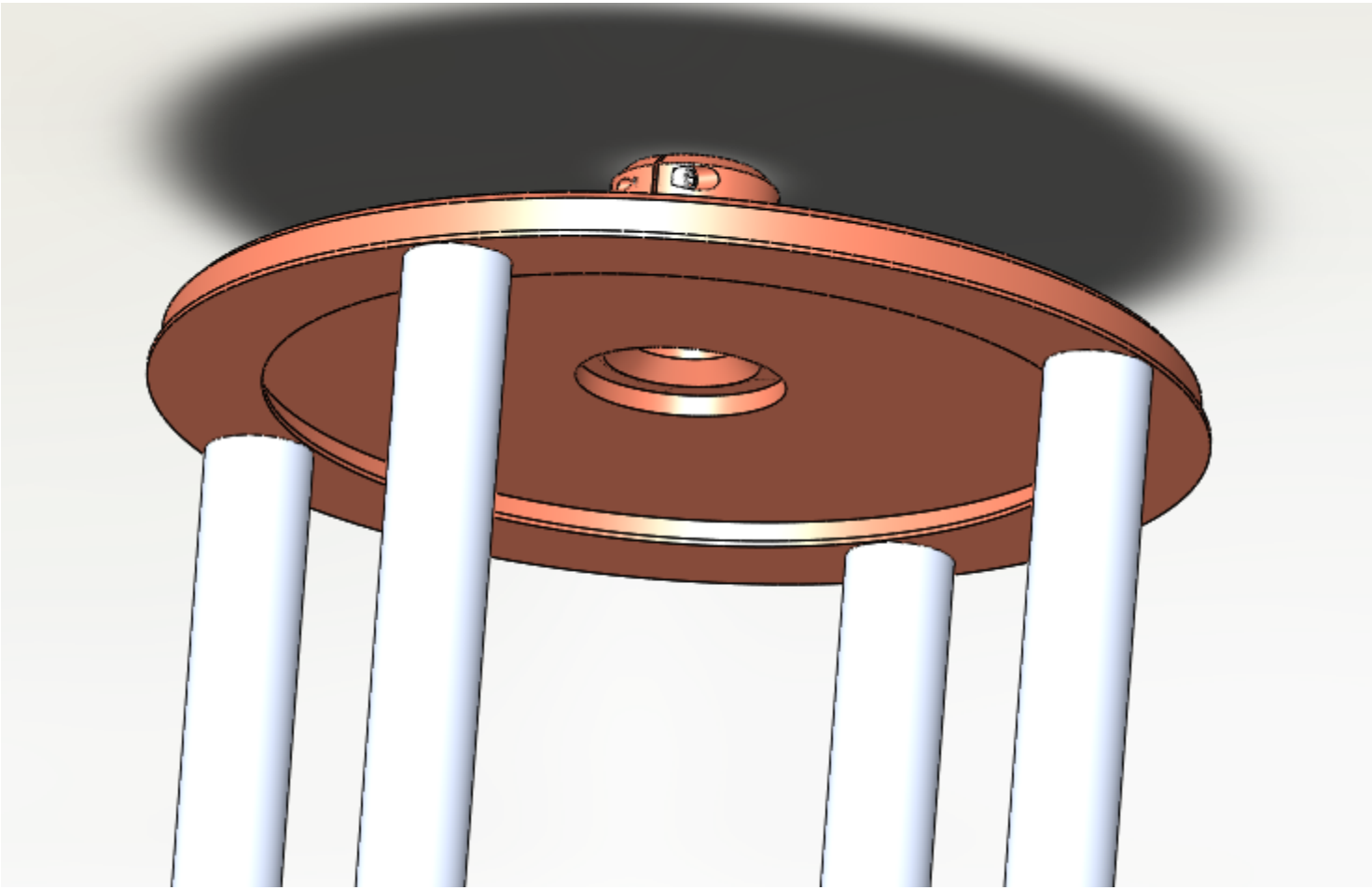

Top Plate Assembly

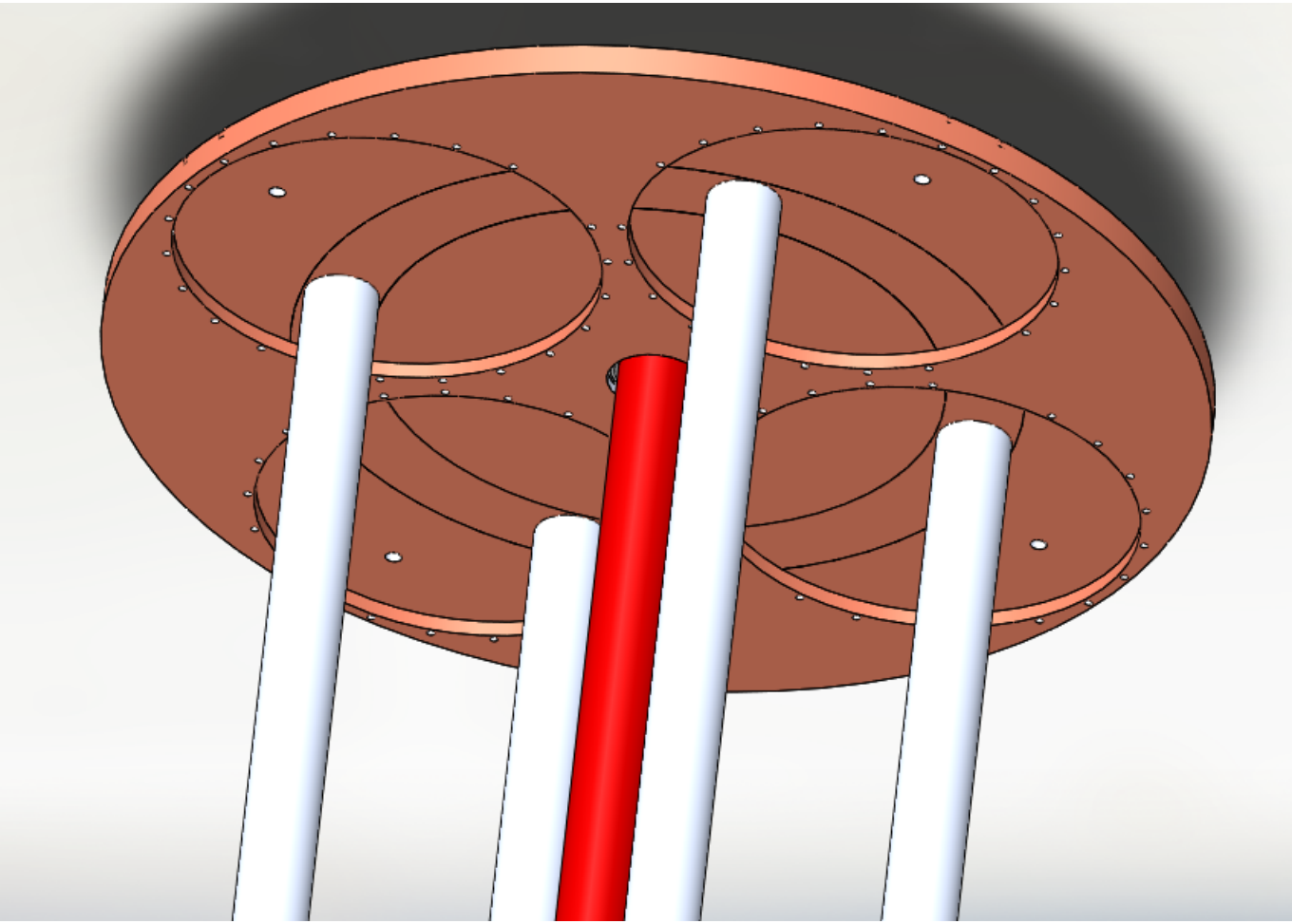

Top Plate Assembly

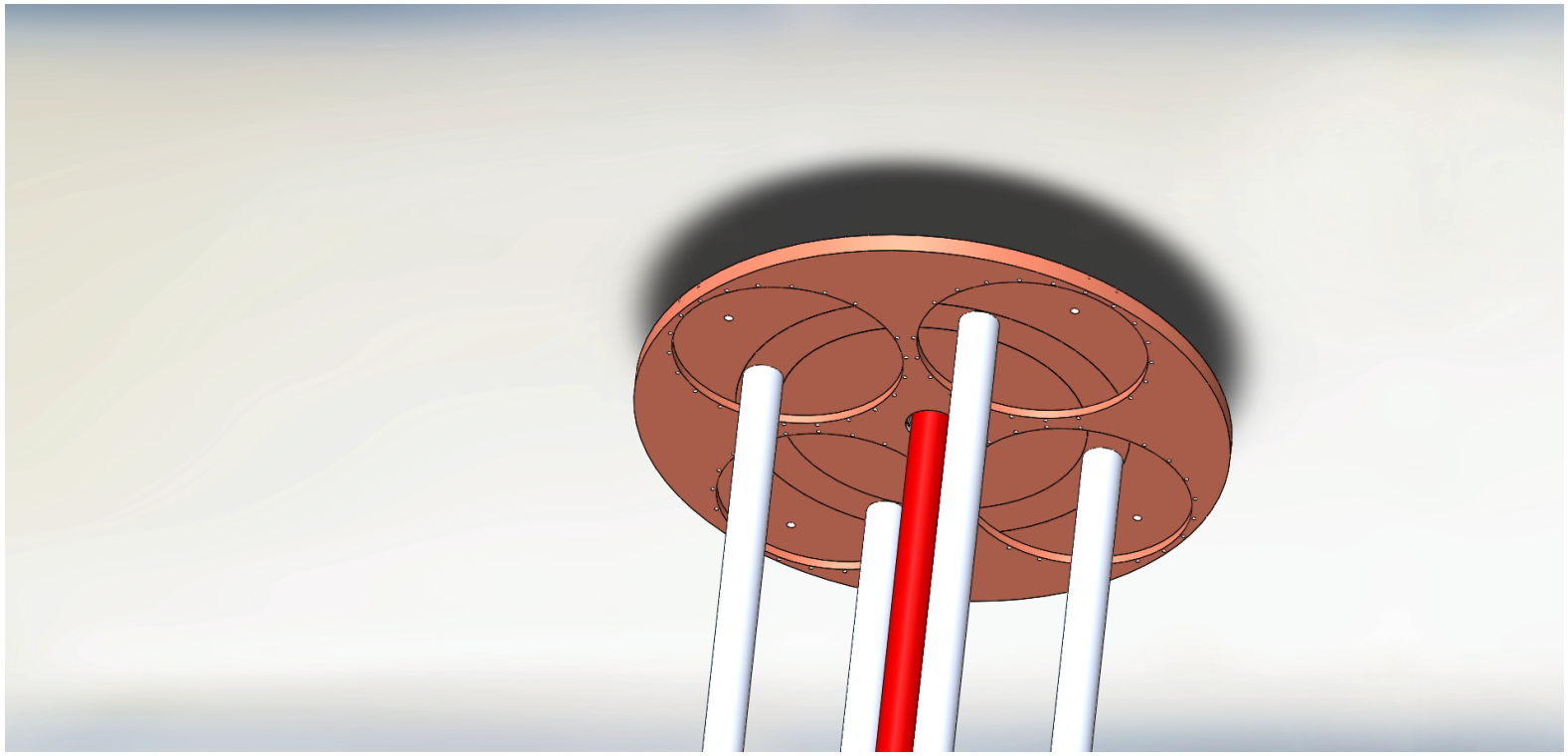

Top Plate Assembly

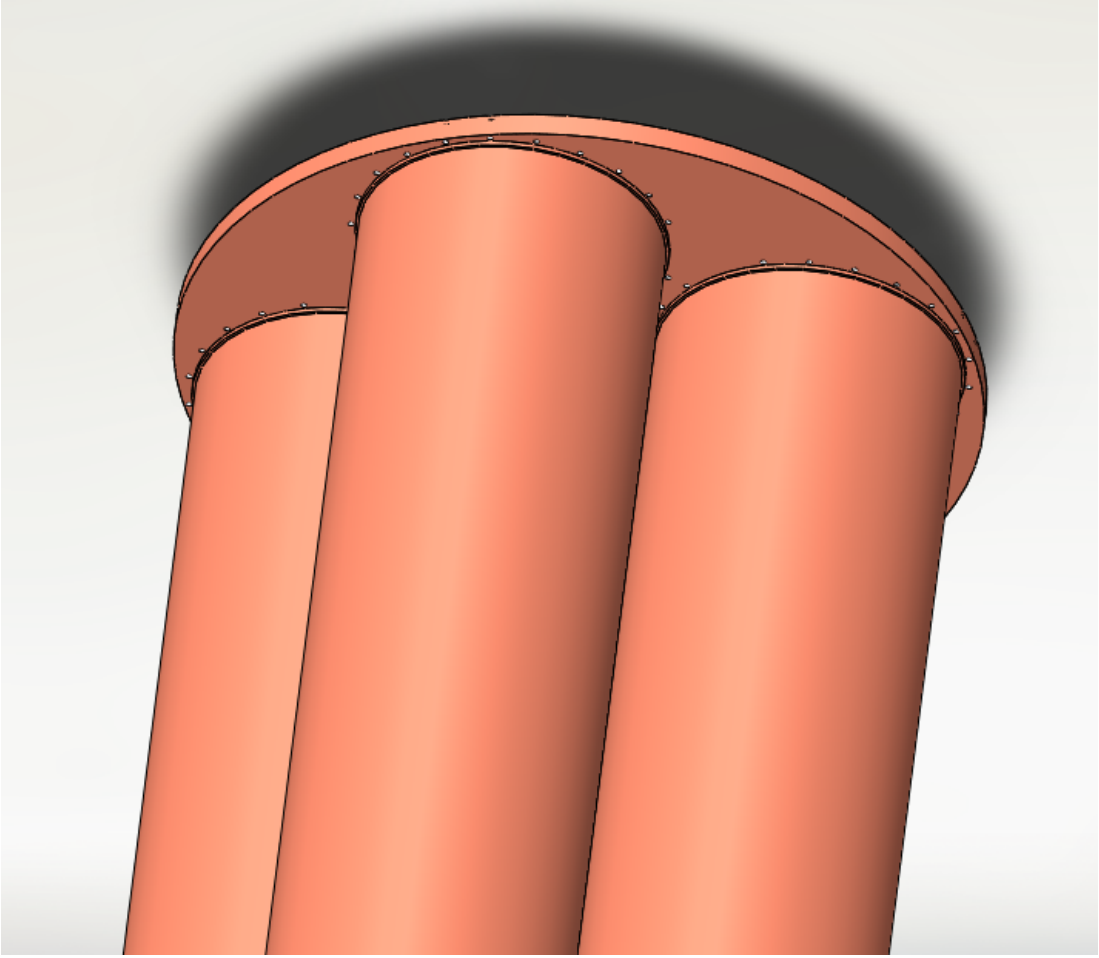

Top Plate Assembly

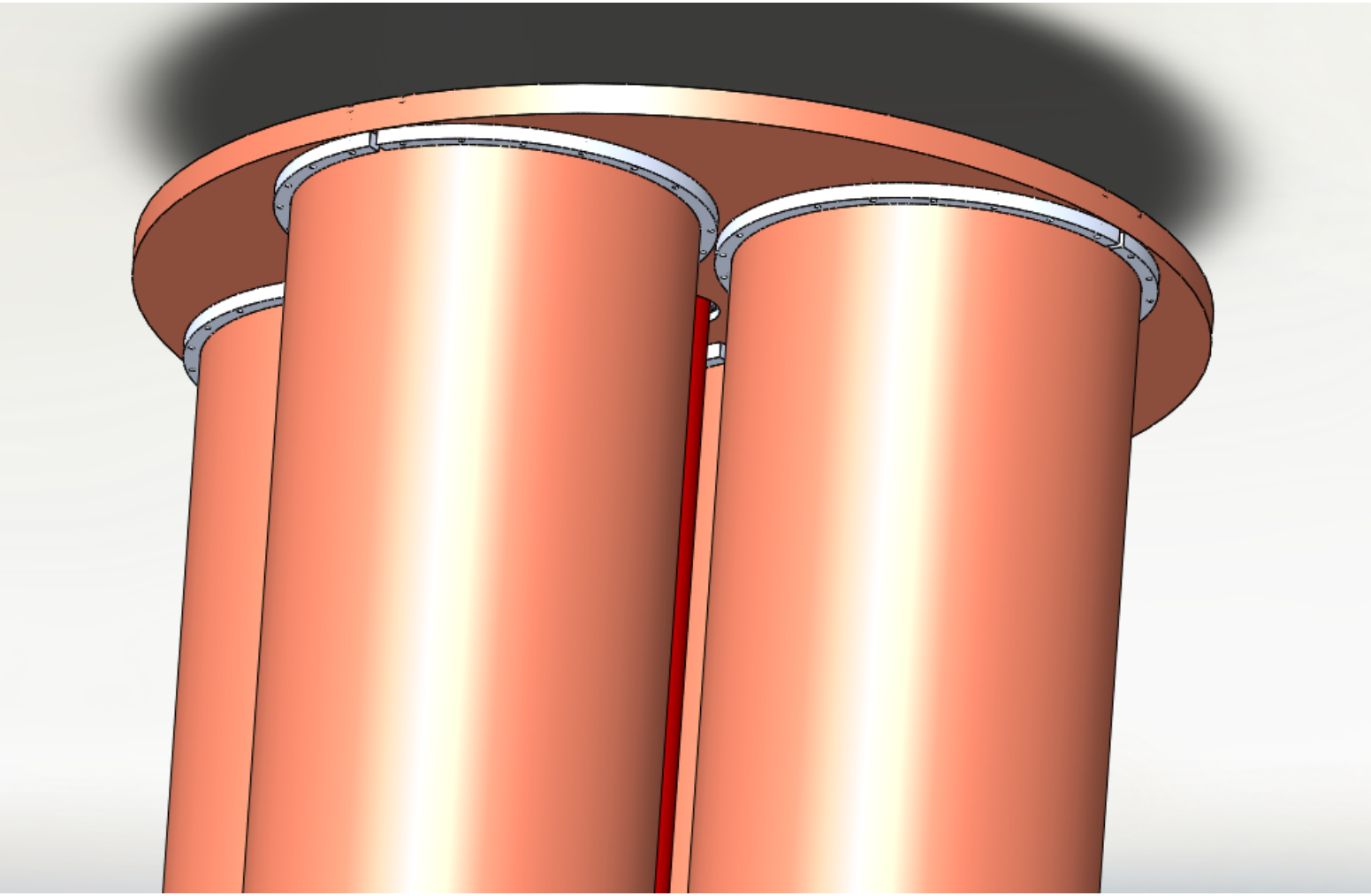

4 Cavity 100cm Array

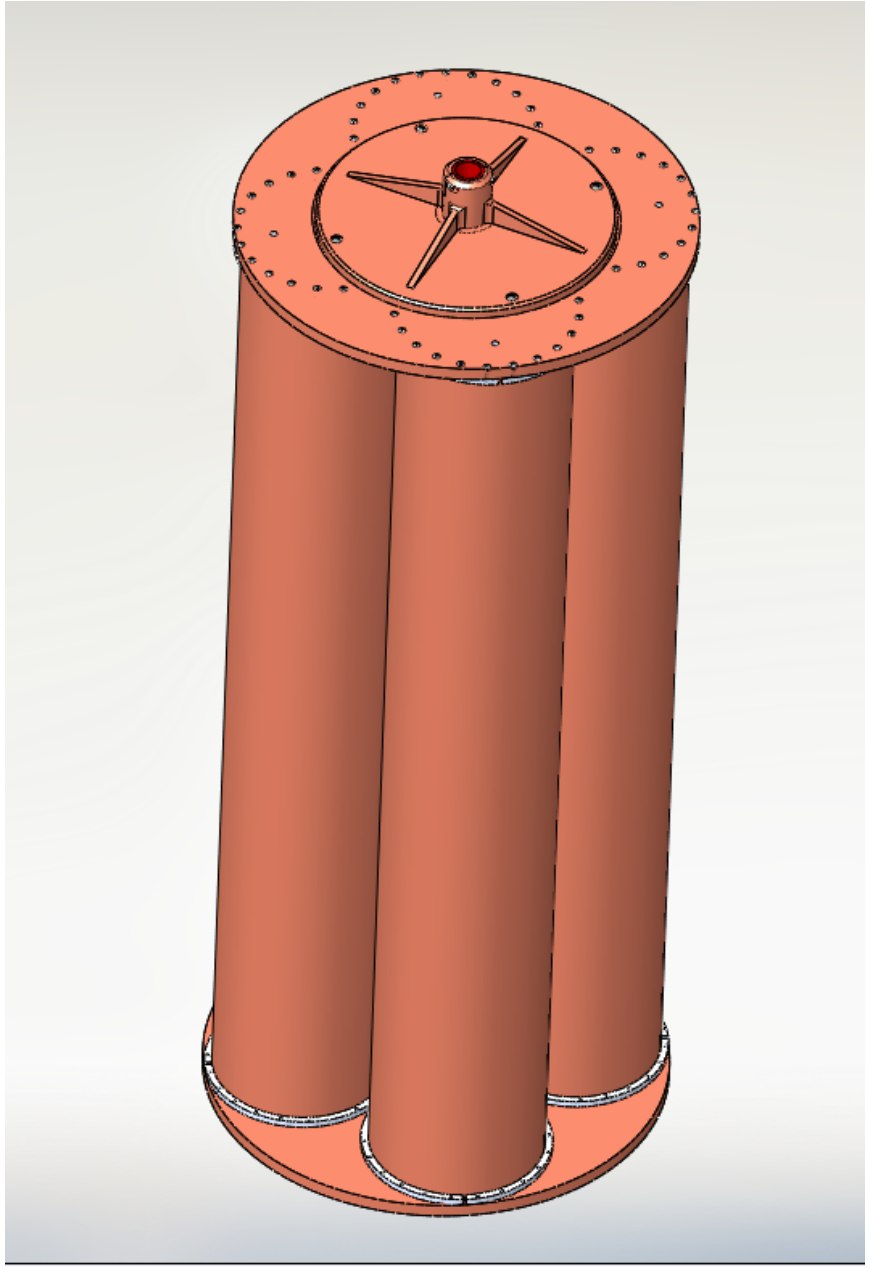

8 Cavity 45cm / 55cm Array

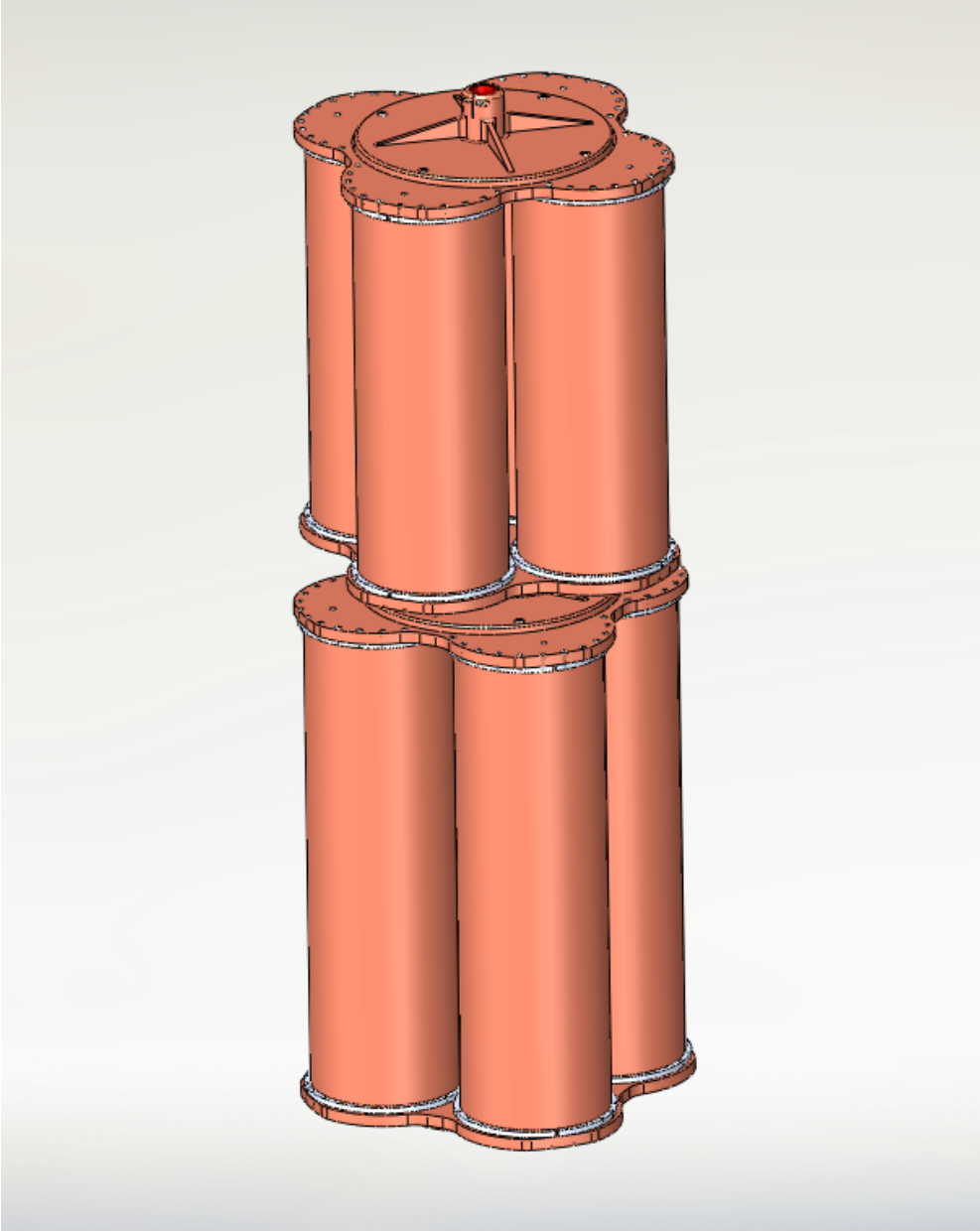

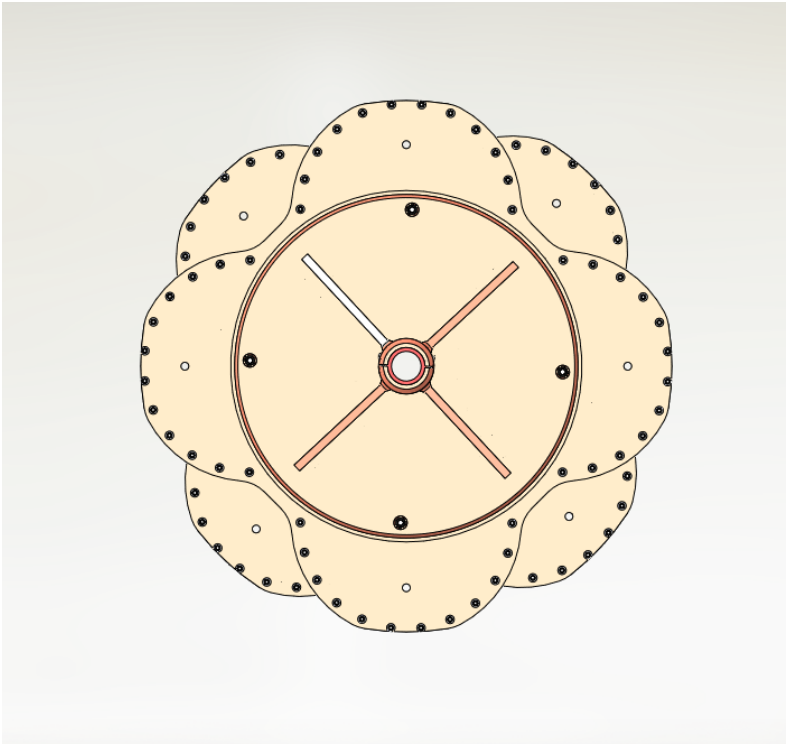

1” metal rod
at center
TM010 mode
2.15 GHz

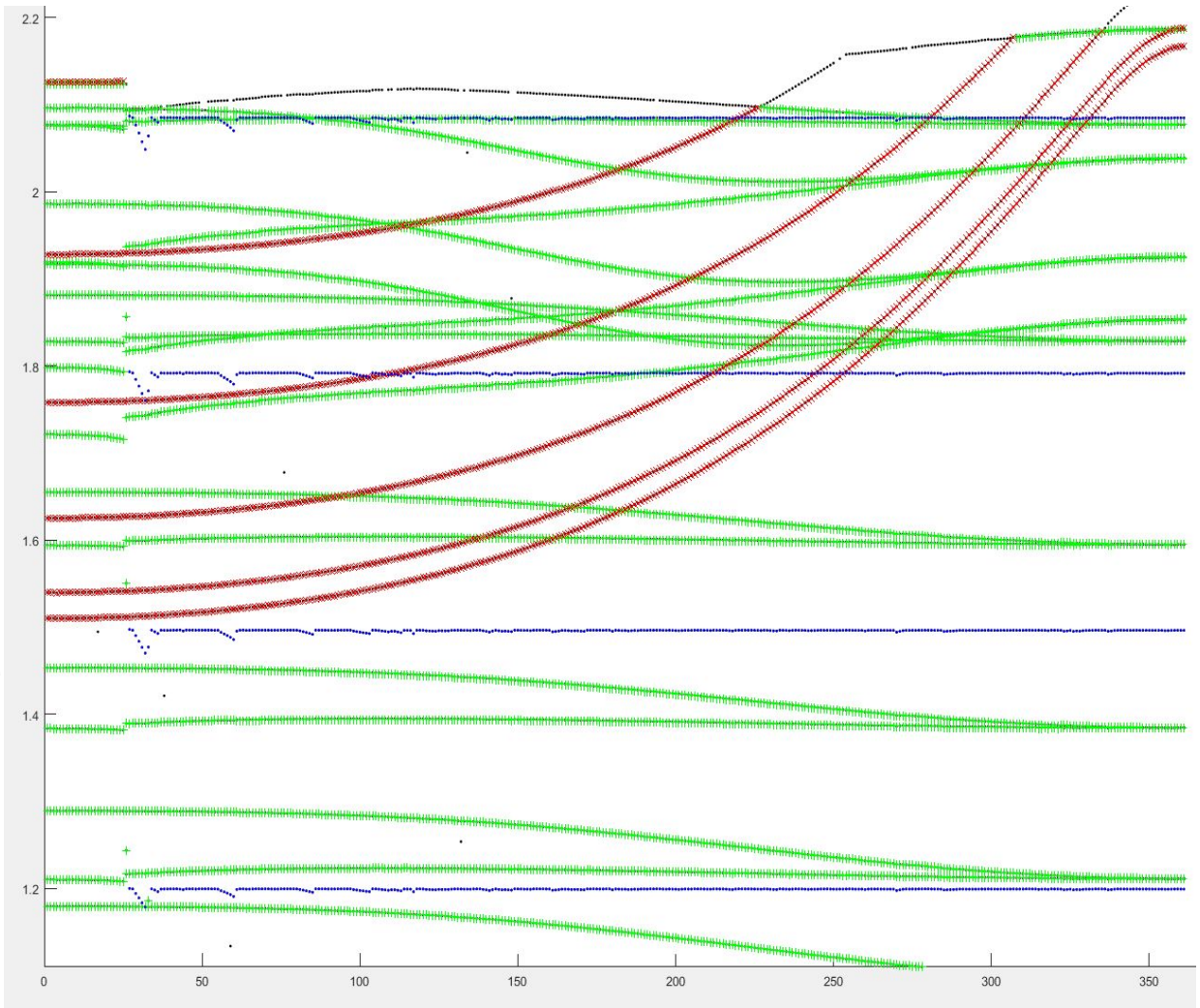

1” metal rod
at wall
TM010 mode
1.5 GHz

Cavity Array Prototype

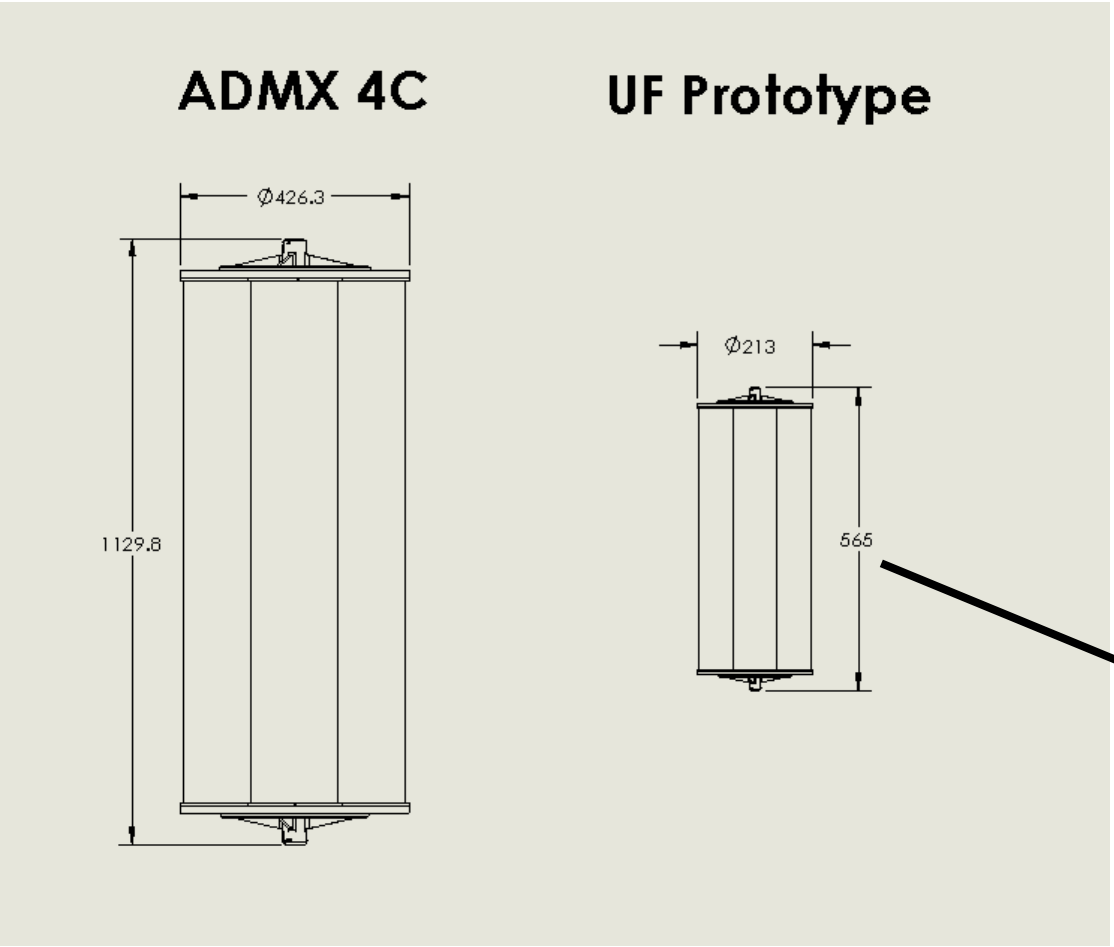

Thank You