radiabeam TECHNOLOGIES

Collaboration Subjects

Presented by: Ronald Agustsson

June 06, 2017

Contents

- 3+year SBIR project to build the prototype non-linear insert for the IOTA project.
  - The RBT effort lead primarily by Finn O'Shea and Jake McNevin
  - Magnet Modules
  - Vacuum Chamber
  - Global Kinematics
- Beamline Optics
  - RBT efforts of Yung Chen, Alexander Laurich, Tara Campese
  - Quadrupole magnet with indirect water cooling
  - Combined function steering/skew quadrupole magnet
- Inverse Compton Scattering research
  - Alex Murokh, NIU and Fermilab

Integrable Optics Test Accelerator

- IOTA is a project at FermiLab to perform a proof-of-principle experiment on the integrable optics concept.
  - V. Danilov and S. Nagaitsev, PR ST-AB 13, 084002 (2010).
  - A.Valishev, S.Nagaitsev, V.V.Danilov, D.N.Shatilov, *Proc. IPAC'12*, pp. 1371.
- Scale: 32 m circumference, 150 MeV electron ring, β = 70-200 cm, eventually ~3 MeV protons

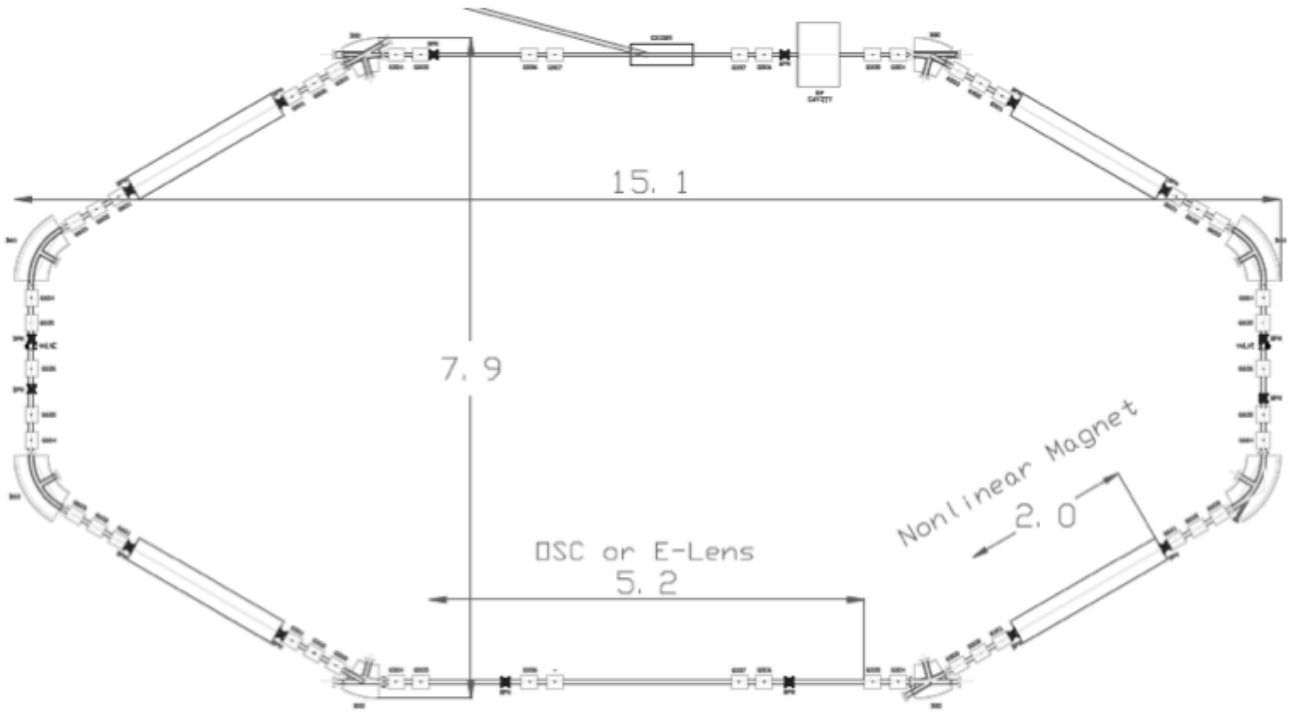

RadiaBeam's Insert

- 2-meter long device where the field strength varies quadratically with s. $\beta(s) = \beta^* + s^2/\beta^*$
- Alignment goal of r = 100 um, 0.5 deg for all the modules
- Field required a set of specific harmonics

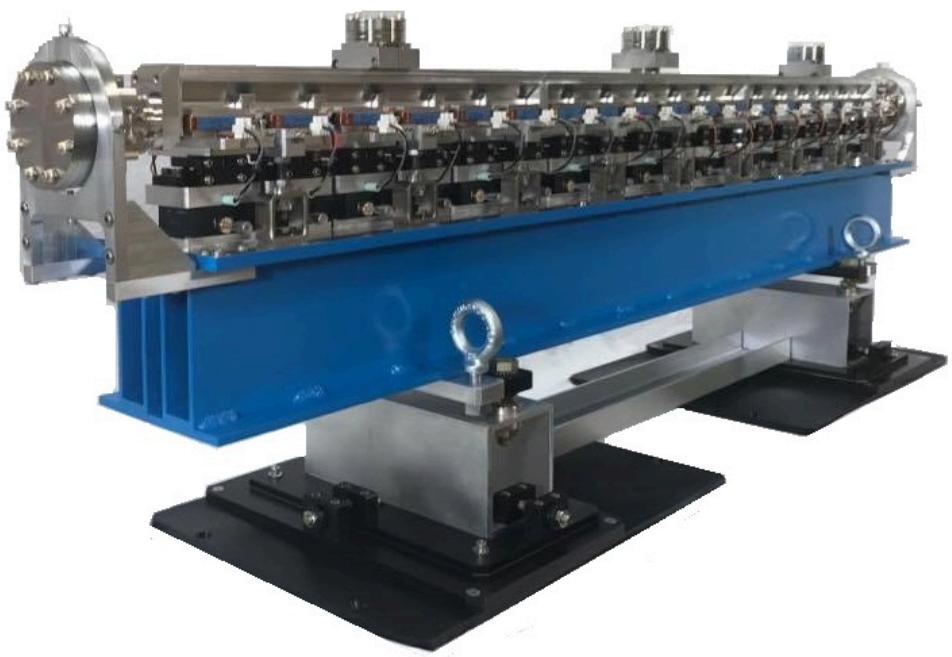

Magnetic Modules Manufacturing

- Aremco Grade 4 Pure Iron
- Normalization Anneal per manufacturers schedule
- Assemble/pin/'blank machining'

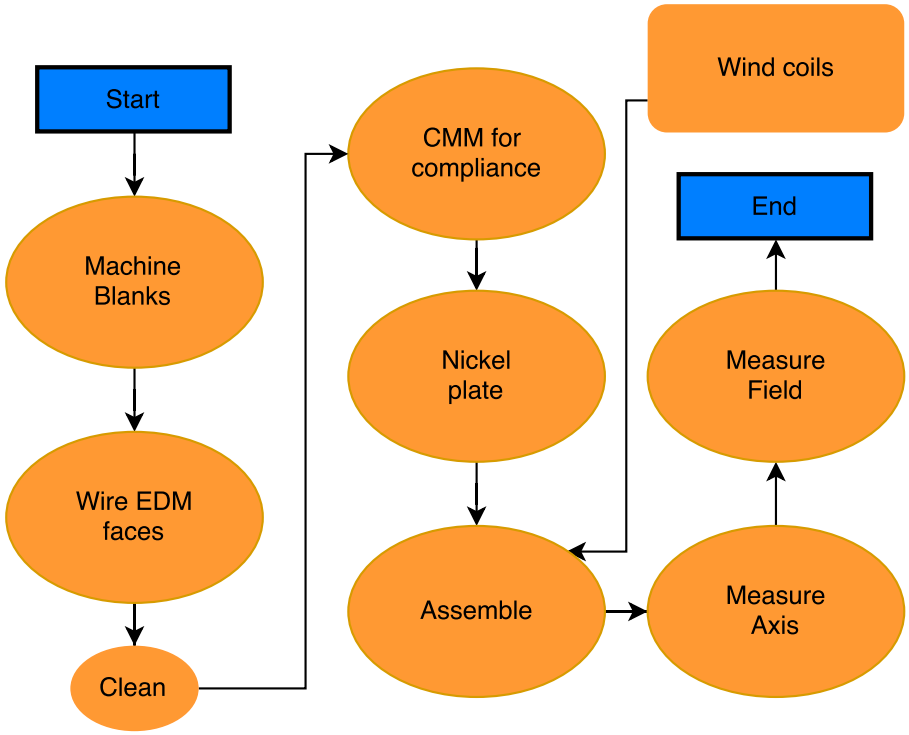

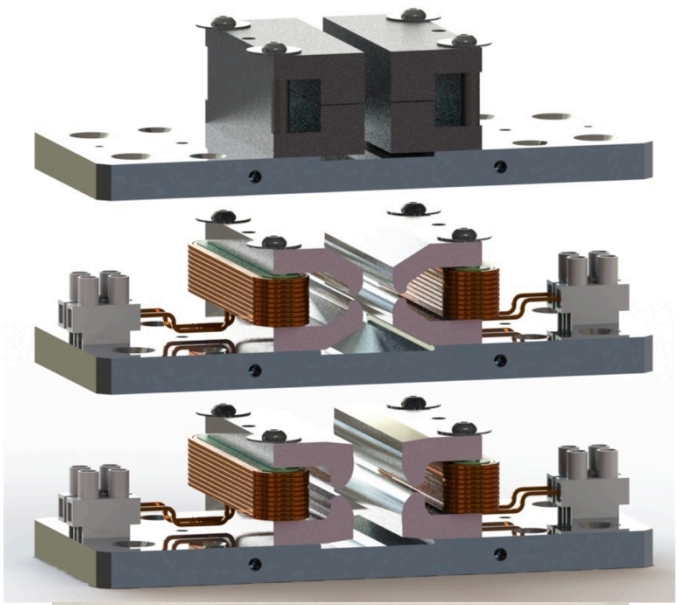

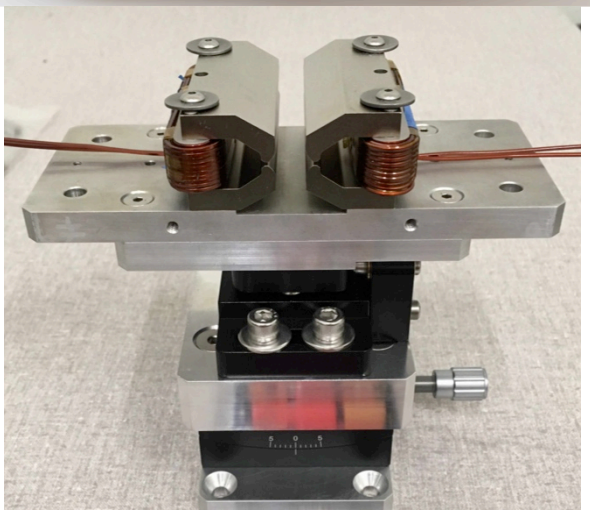

Axis Finding

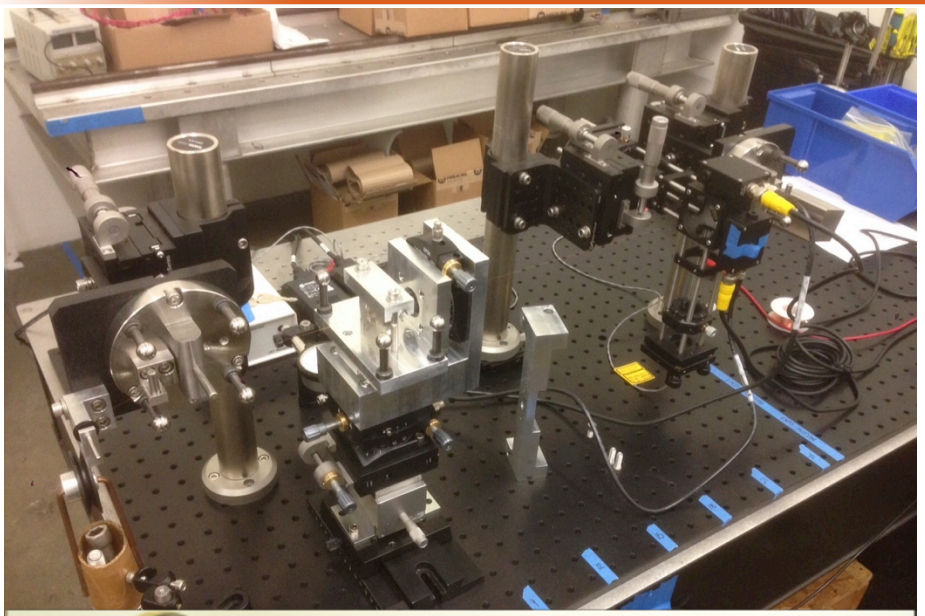

- Optical stages are used to position the modules
- Vibrating wire for locating the centers
- Others have proven the technique to the µm level, which is well more than we need.
- Current system repeatability:
  - X-location: ±2 µm (auto)
  - Y-location: ±5 µm (auto)
  - Pitch: <1 deg
  - Yaw: <1 deg
  - Roll: ±0.2 deg (auto)

Axis Finding

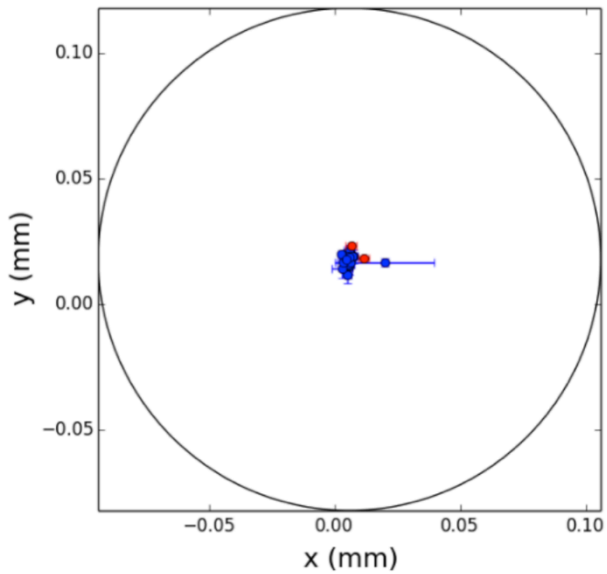

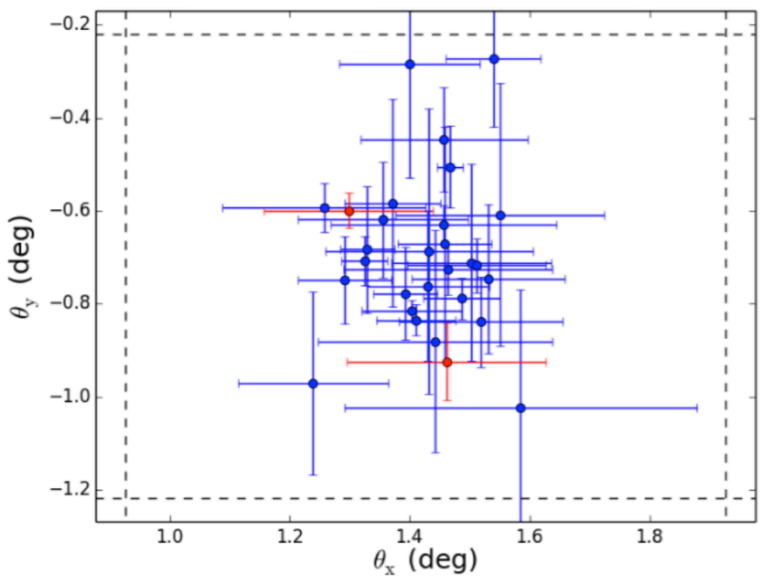

- Used conical seats in wire support
- Fiducialized to conical seats in module assembly with CMM arm
- Magnetic axis located within 60 µm
- Magnetic roll known to within +/- 0.5 deg
- Difference in the mean roll between axis suggests that the detectors used were not orthogonal.
- Data passed to FNAL for final alignment prior to installation

Vacuum Chamber

- Nearly 2-meters long but requires 0.25 mm features to fit magnets.
- Cannot be extruded because of the quadratic growth in diameter.
- Requires a complex schedule of alternating machining and e-beam welding to maintain the <0.005” dimensions needed for good welds.
- Primarily 2219 Al for e-beam welding

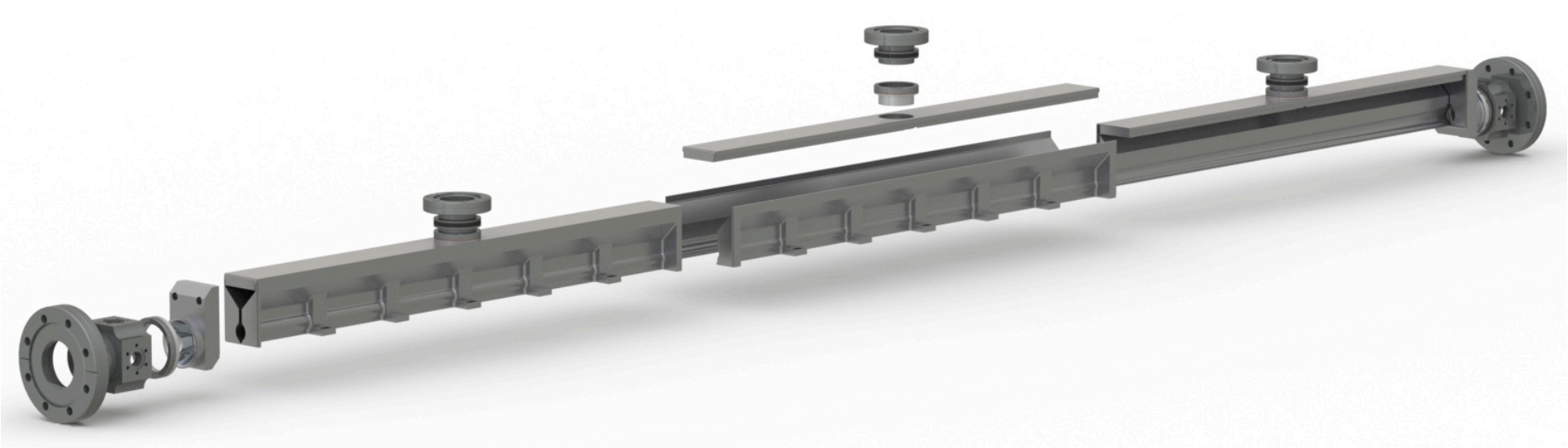

Key Requirements and Features

- Largest aperture possible
  - Conforms to tapering magnet apertures
  - Min wall thickness <250 µm
  - Min outer gap <250 µm
- Ultimate Pressure <1E-9 Torr
  - Estimated U.P. of6E-11 Torr
- Restrained Straightness of 125 µm over full length.

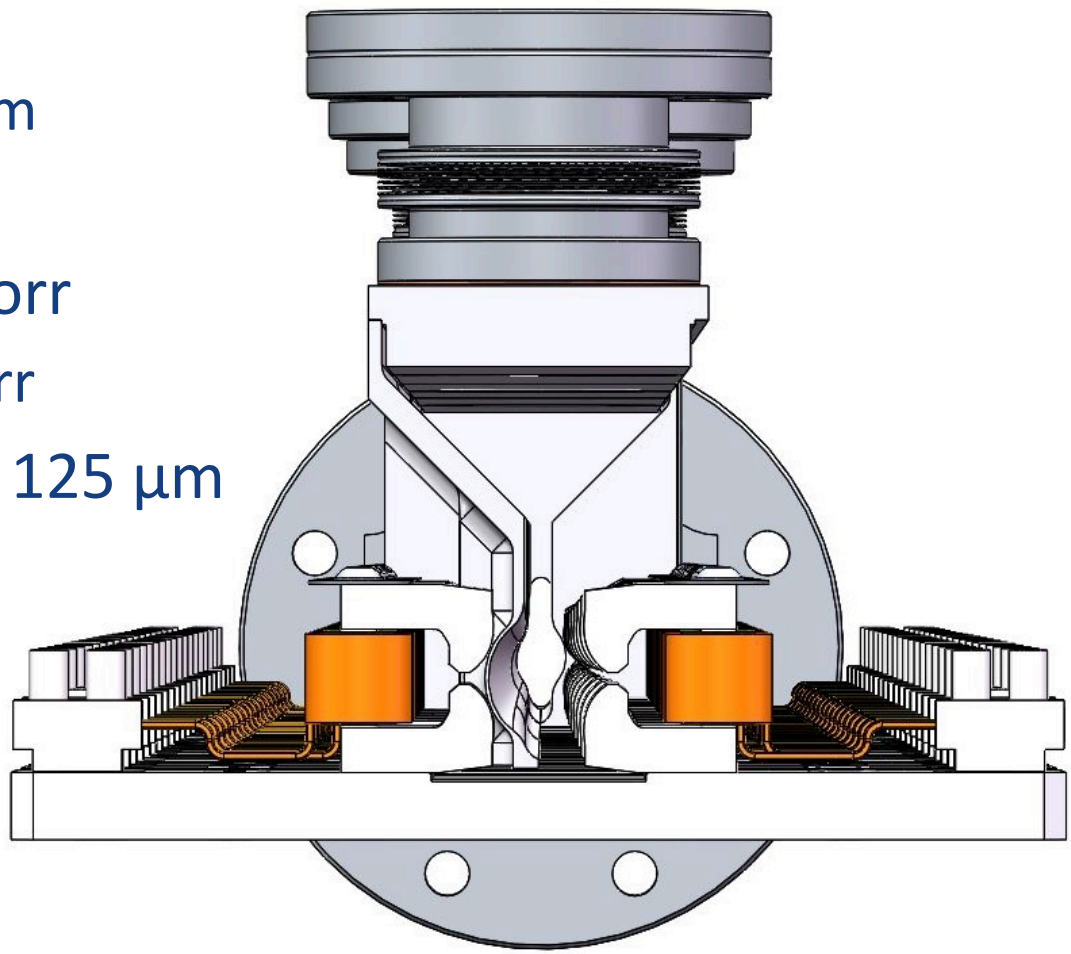

Vacuum Chamber Manufacturing

- Two series of prototyping with smaller chambers
- Critical features inspected with CMM
- All joints prototyped and welding using electron beam welding
  - Checked for hermeticity after each weld
- However, upon *final* leak check…

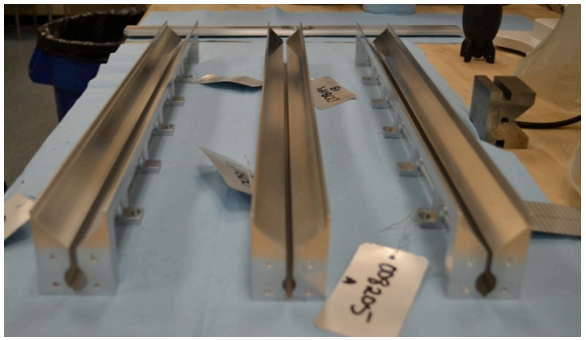

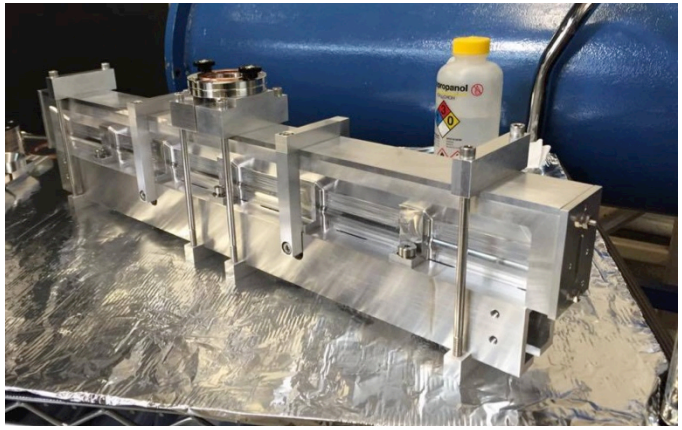

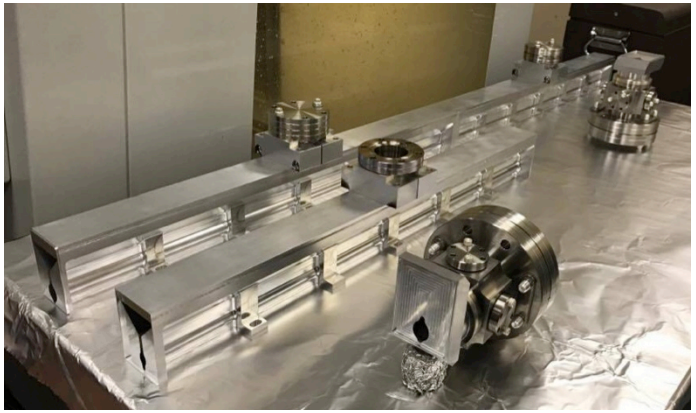

Vacuum Chamber Leak

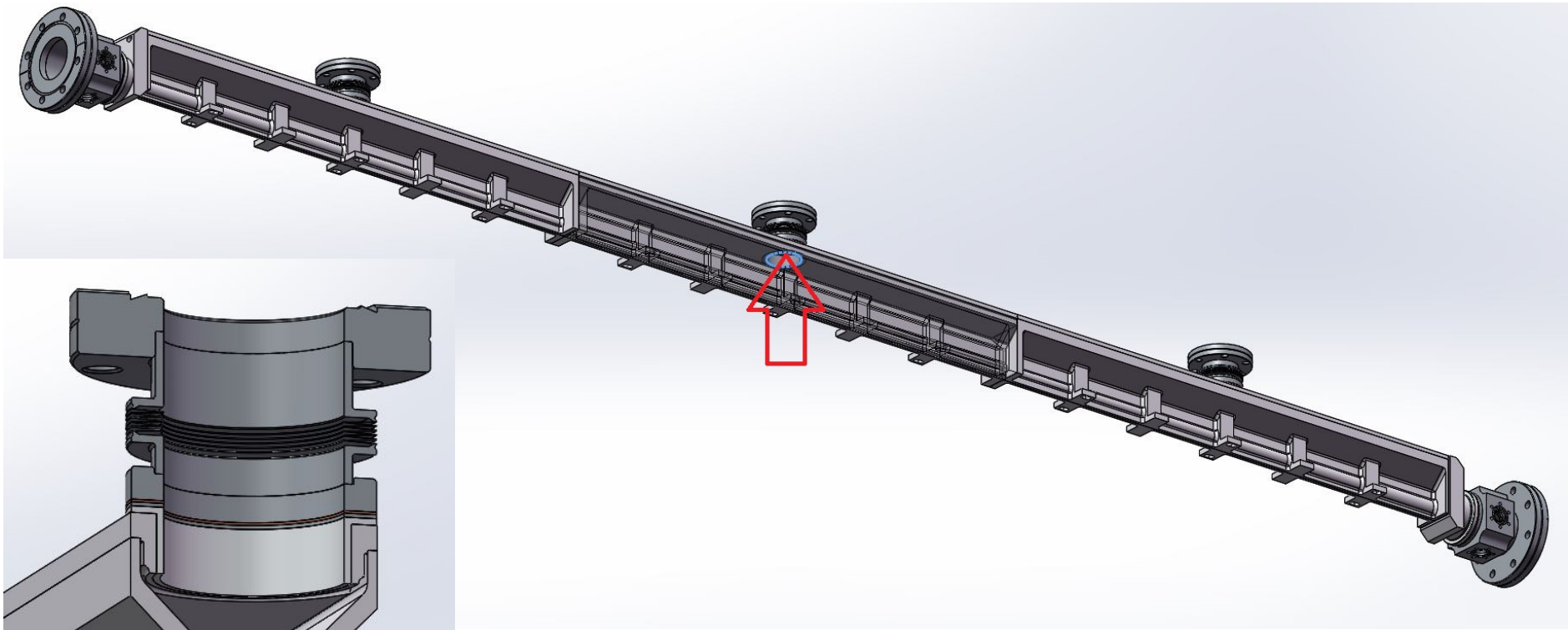

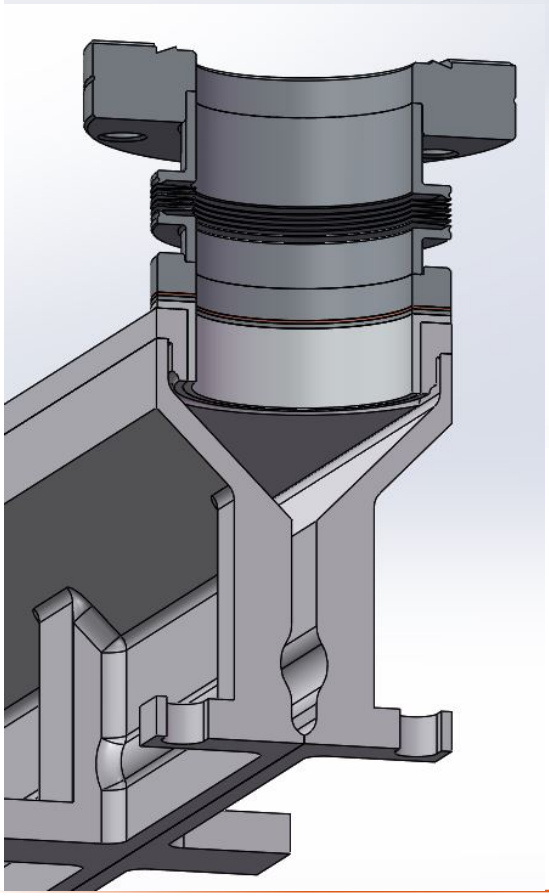

- Leak in 2219 to 6061 central inside joint
- First weld performed and buried
- Original leak rate of ~5E-8 Torr l/s
- Currently leak rate of ~5E-6 Torr l/s

Vacuum Chamber Leak Fix

- EBW facilities capable of fitting the chamber are very limited
- Moved to an external fix
  - Extract bellows assembly
  - Make new joint 2219 to 2219 Al
  - Minimize virtual leaks

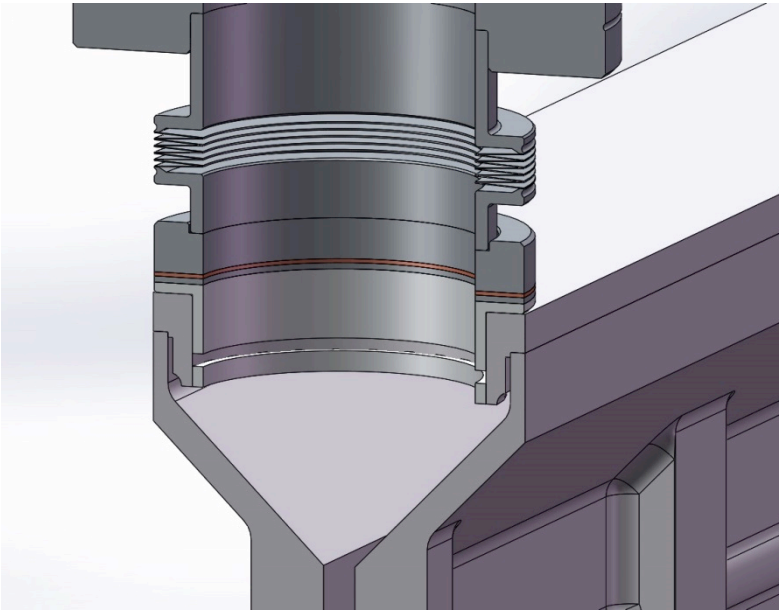

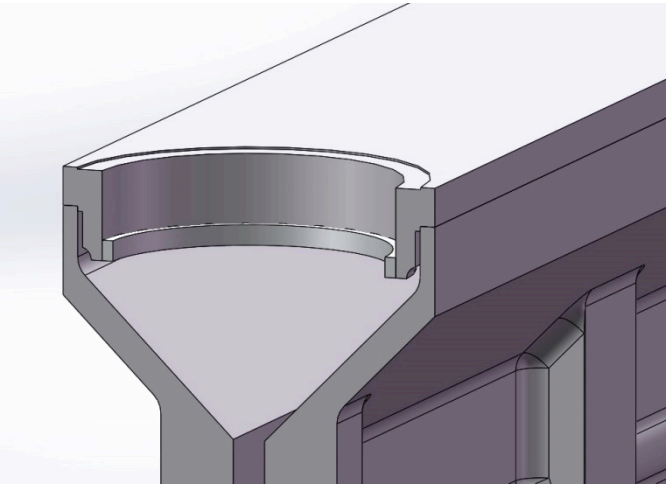

Vacuum Chamber Leak Fix

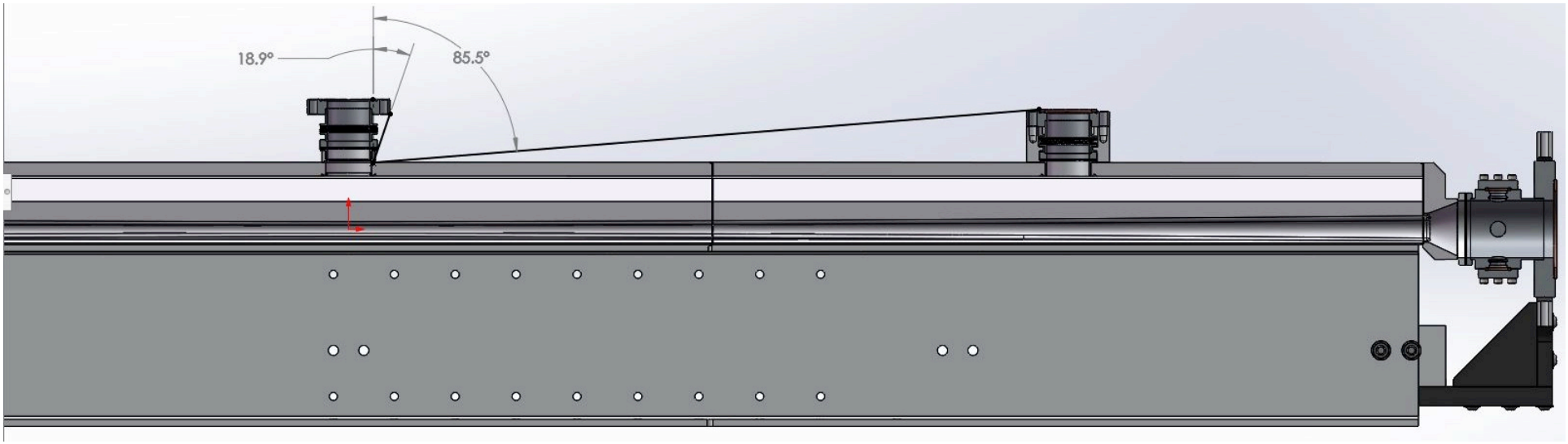

- Intended to EBW at an angle as parallel to the joint as possible
- Sample joints were generated for verification
  - All passed He leak checks
- Attached a spud to the bottom of the support extrusion and rotated the chamber relative to the beam

Vacuum Chamber Leak Fix

radiabeam TECHNOLOGIES

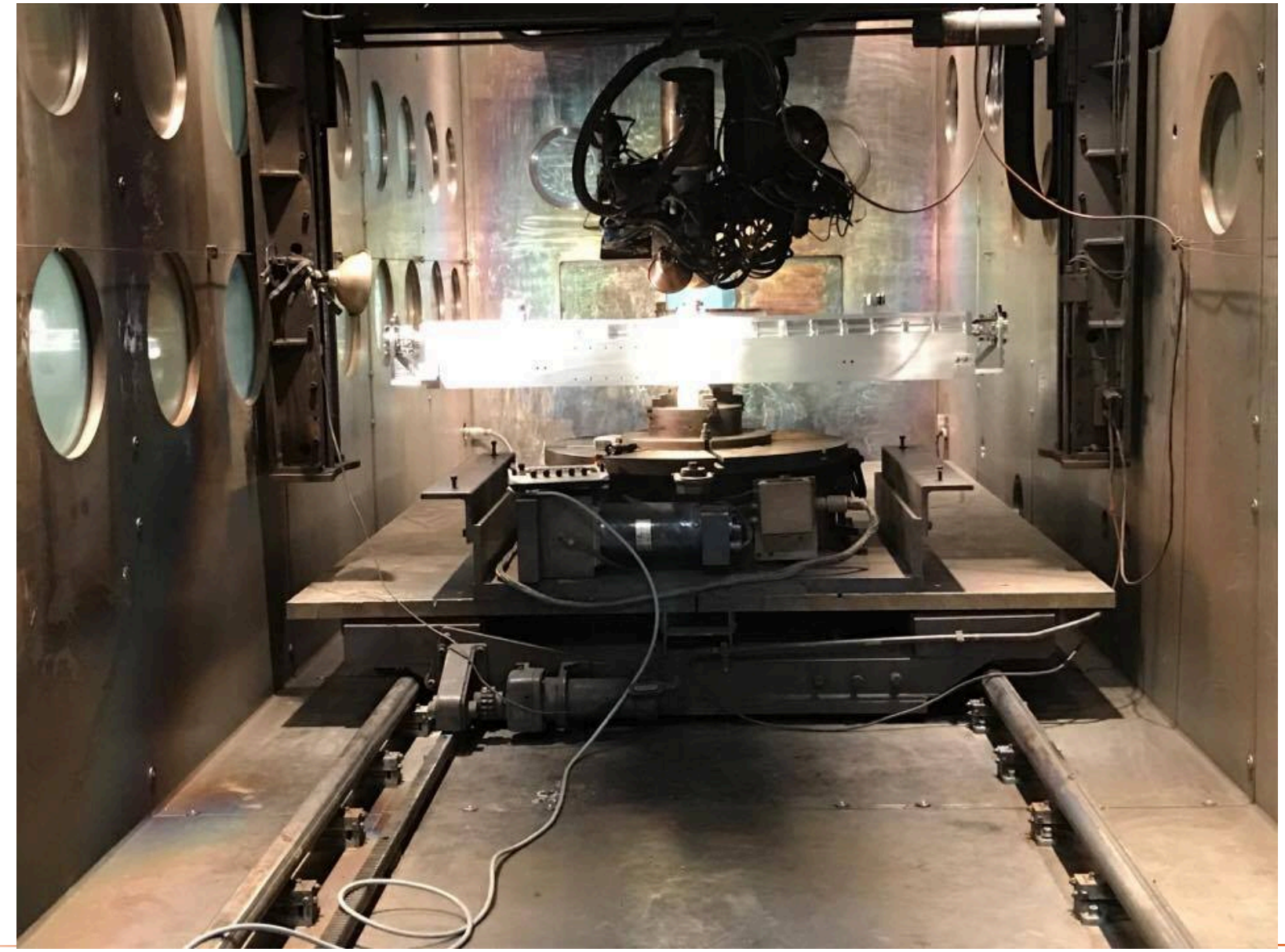

Vacuum Chamber Leak

radiabeam TECHNOLOGIES

Current Status:

- The repair was unsuccessful
  - Two more weld attempts both failed
  - Leak rate of 5E-6 Torr. l/s He
- Leak appears to be at the point of circular overlap in weld (runoff point)

Potential Saboteurs:

- Angle of incidence was more perpendicular than parallel to joint
- Targeting the weld joint was difficult
  - Increasingly difficult each successive attempt. Weld bead looks offset
- Material was pulled in to the wrong location
- Oxidation from tack welds
  - The overlap coincides with the tack
- Weld parameters and methods altered after samples were validated
  - Weld lead in and run-off are critical to the success of the weld
- More detailed documentation available

Global Kinematics

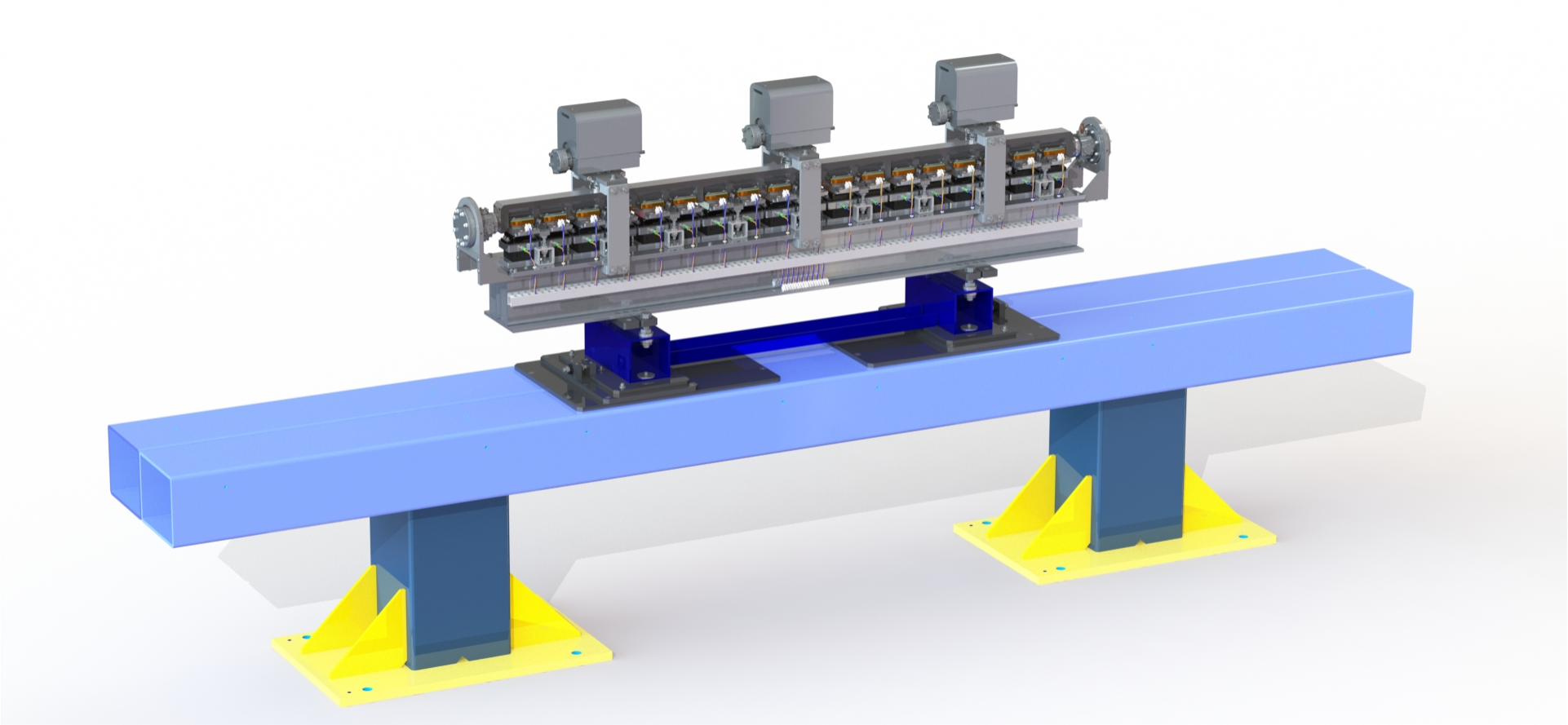

- Brass shims are placed between moving components for ease of motion.
- 300 micron resolution
- More detailed documentation available

Global Kinematics Z-axis

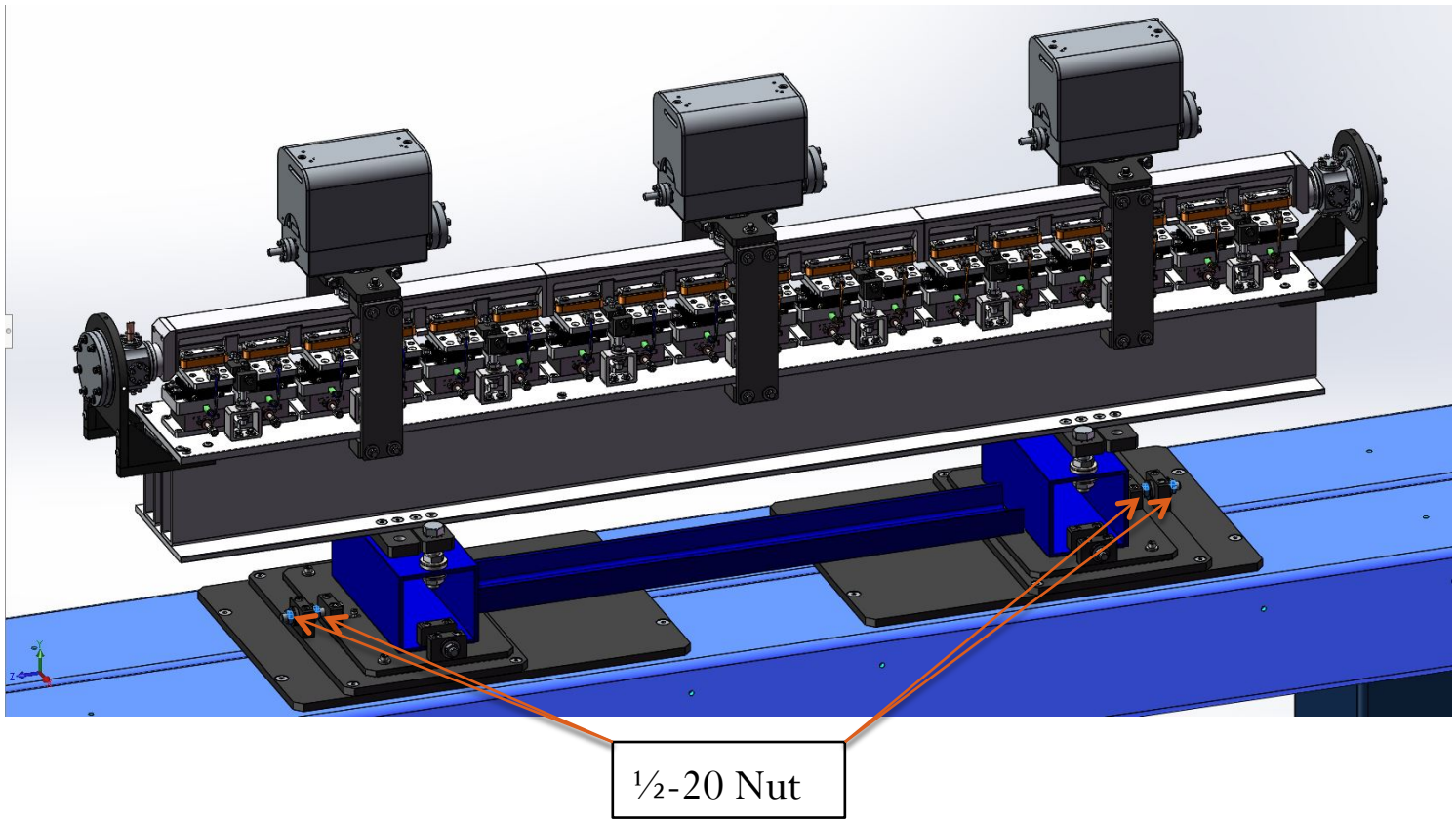

- Position along the Z-axis can be adjusted with ½-20 nuts.
- Motion of both sides is coupled by the u-channel and strongback.
- Total range of Z travel: 0.7”
- Integrated provisions for locking in place

Global Kinematics X-axis + Yaw

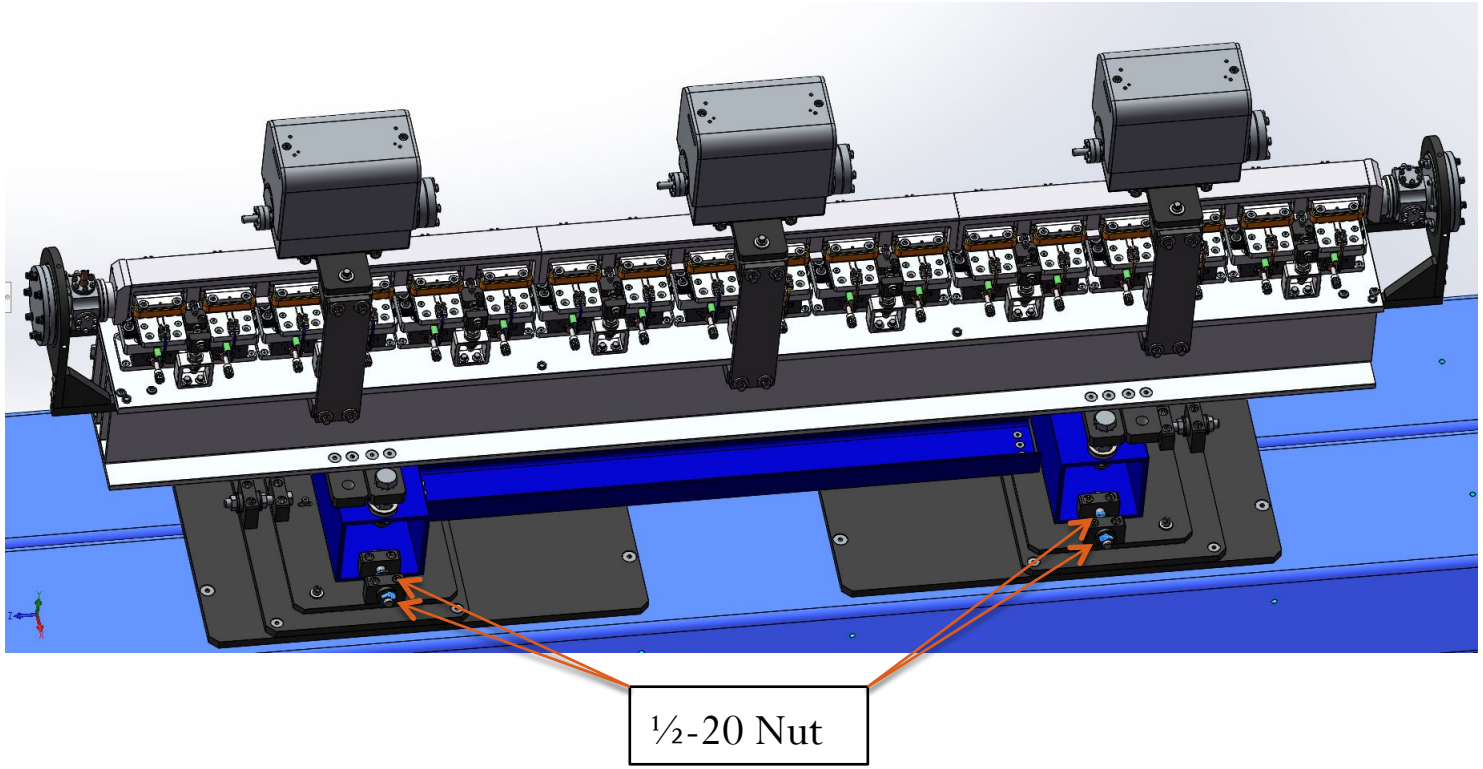

- Position along the X-axis as well as yaw can be adjusted by rotating the ½-20 nuts.
- Motion between the two sides is coupled by the strongback.
- Total range of X travel: 0.7”
- Integrated provisions for locking in place

Global Kinematics Y-axis + Roll & Pitch

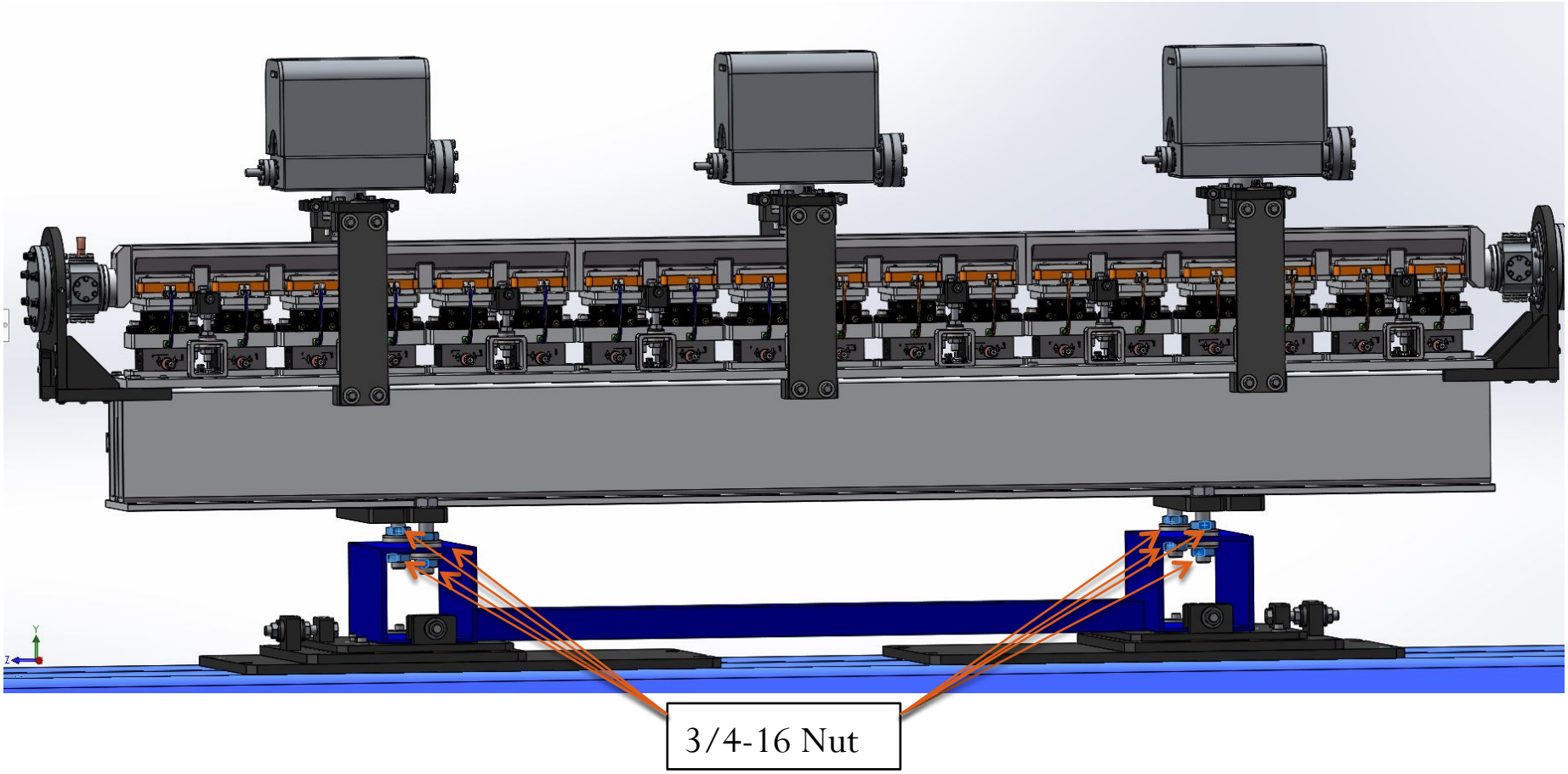

- Rotating the nuts evenly will adjust overall 'Y' position.
- Rotating the downstream pair more or less than the upstream pair will adjust pitch.
- Rotating the inside pair more or less than the outside pair will adjust roll.
- Total range of Y travel: 0.9"

IOTA Insert Summary

- Work primarily driven by Finn O'Shea
- Thanks to Jacob McNevin, David Martin and the RadiaBeam shop for all of their work on this project.
- RadiaSoft collaborators David Bruhwiler, Stephen Webb
- FNAL collaborators Alexander Valishev and Alexander Romanov
- Further Radiabeam information on the insert:
  - F. H. O'Shea, NA-PAC 2013, p 922.
  - F. H. O'Shea, AAC 2014, Working Group 7.
  - F. H. O'Shea, IPAC 2015, p 724.
  - F.H. O'Shea, 19th IMMW, Hsinchu, Taiwan, Oct. 2015
  - F.H. O'Shea, AAC 2016
  - J.D. McNevin, et. al, in NAPAC'16
  - F.H. O'Shea, IPAC 2017

Funding: DOE DE-SC0009531

Beamline Optics

- Quadrupole (10 units)
  - 1.2 T*m/m
  - ~6 T/m gradient
  - 63 mm bore diameter
  - 48mm G.F.R.
  - 0.1% field quality [$\int G ds / \int G_0 ds$]
  - Indirectly Cooled

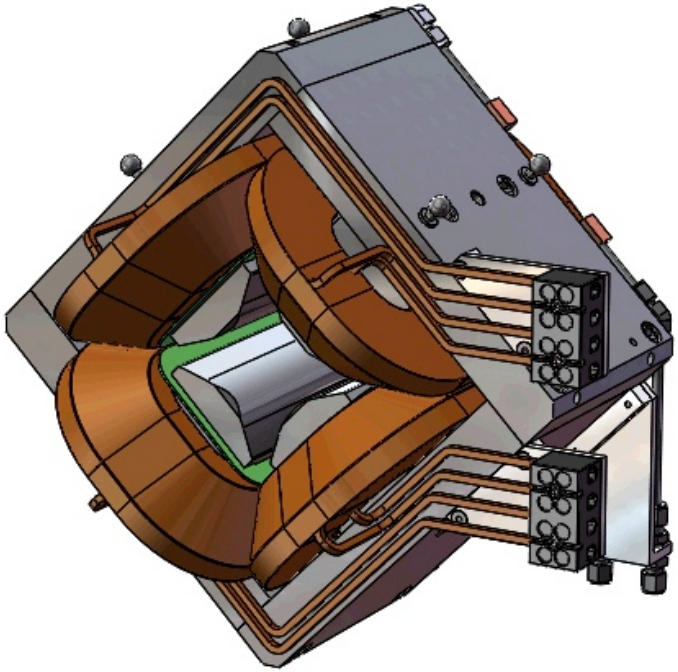

- Combined Function Steering Magnet / Skew-Quadrupole (26 units)
  - X/Y corrector
    - 0.0016 T*m Integrated Field
    - 2.0% field quality
  - Skew Quad
    - 0.022 T*m/m Integrated Field
    - 2.0% field quality

Electromagnets - Quadrupole

- Currently in Production
  - All coils wound
  - Molding ongoing
  - Coil thermal testing completed
    - 1 hr to thermal equilibrium with ~15 deg temperature rise
  - Yoke fabrication ongoing
  - First 2 units to ship at end of this month
  - Remainder by end of July

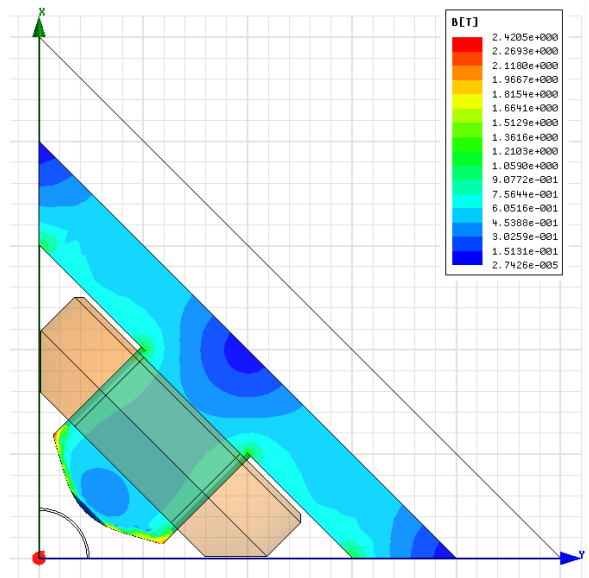

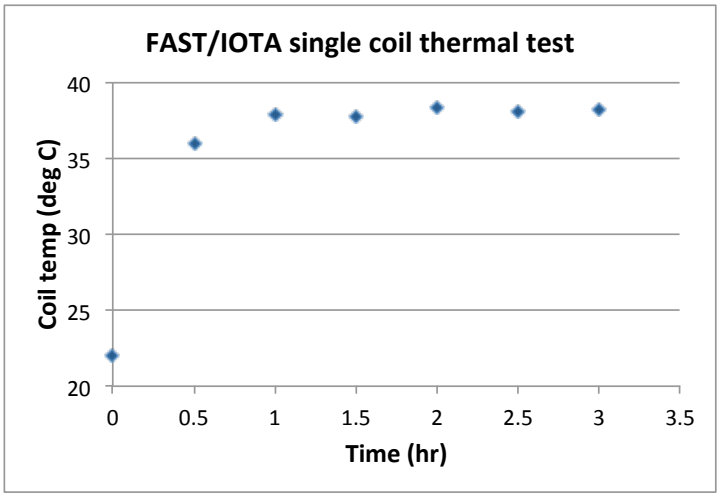

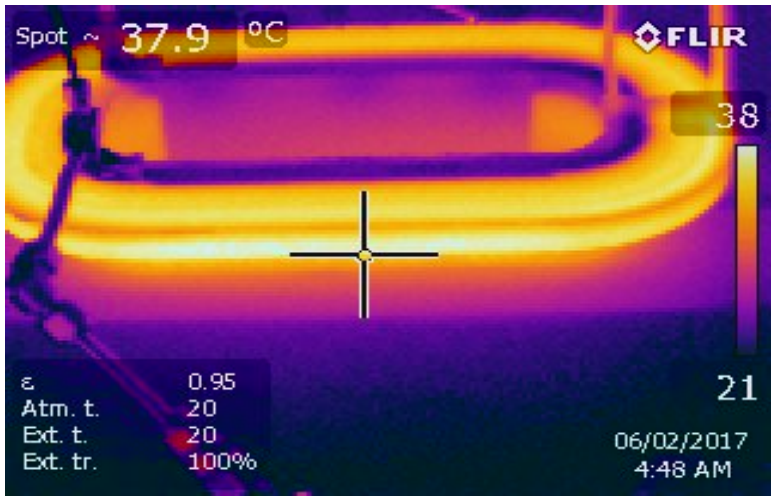

Electromagnets - Combined Function

- Currently in Production
  - Coils currently being wound
  - Engineering Model undergoing field testing
    - Dipole field quality measured 0.7%
    - Skew Quad field quality measured 1.5%
  - Yoke fabrication completed
  - First 2 units to ship by end of this month
  - Remainder by end of July / early August

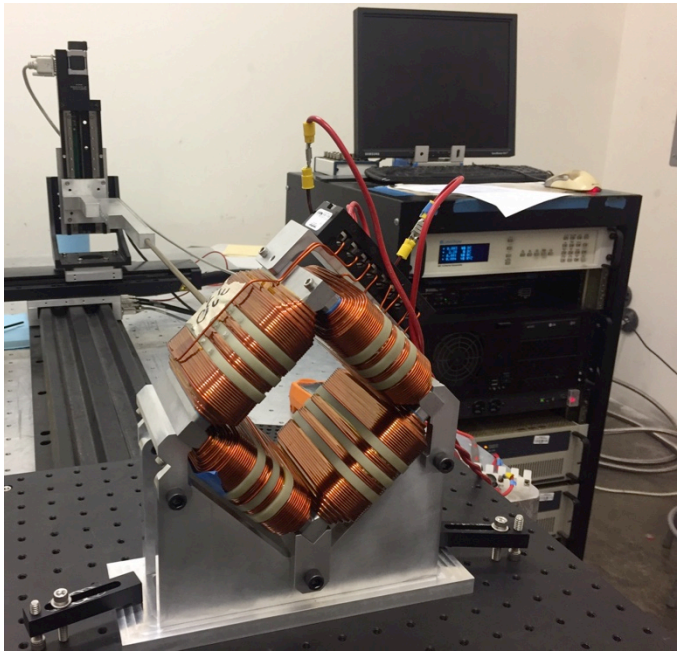

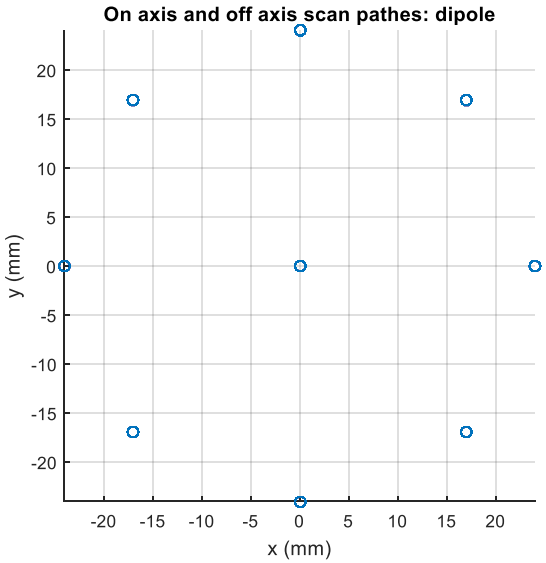

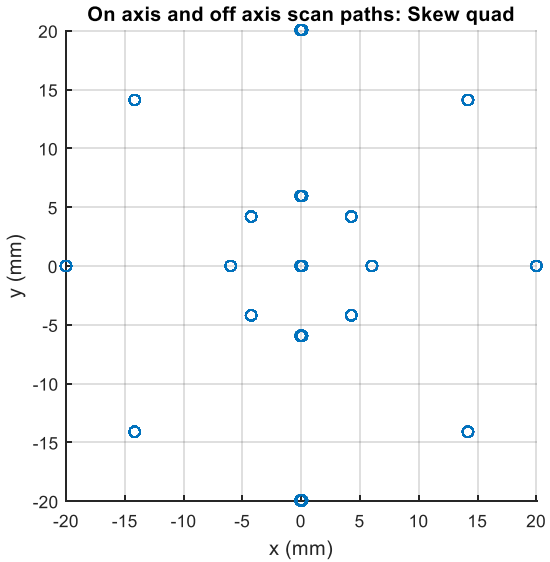

Inverse Compton Scattering

- Photoinjector + linac
- 100 GW-class picosecond laser
- Need to achieve at least 10^4 interactions per second to satisfy practical flux requirements
- Burst mode is ideal (long e-beam pulse trains, combined with high finesse optical cavity)

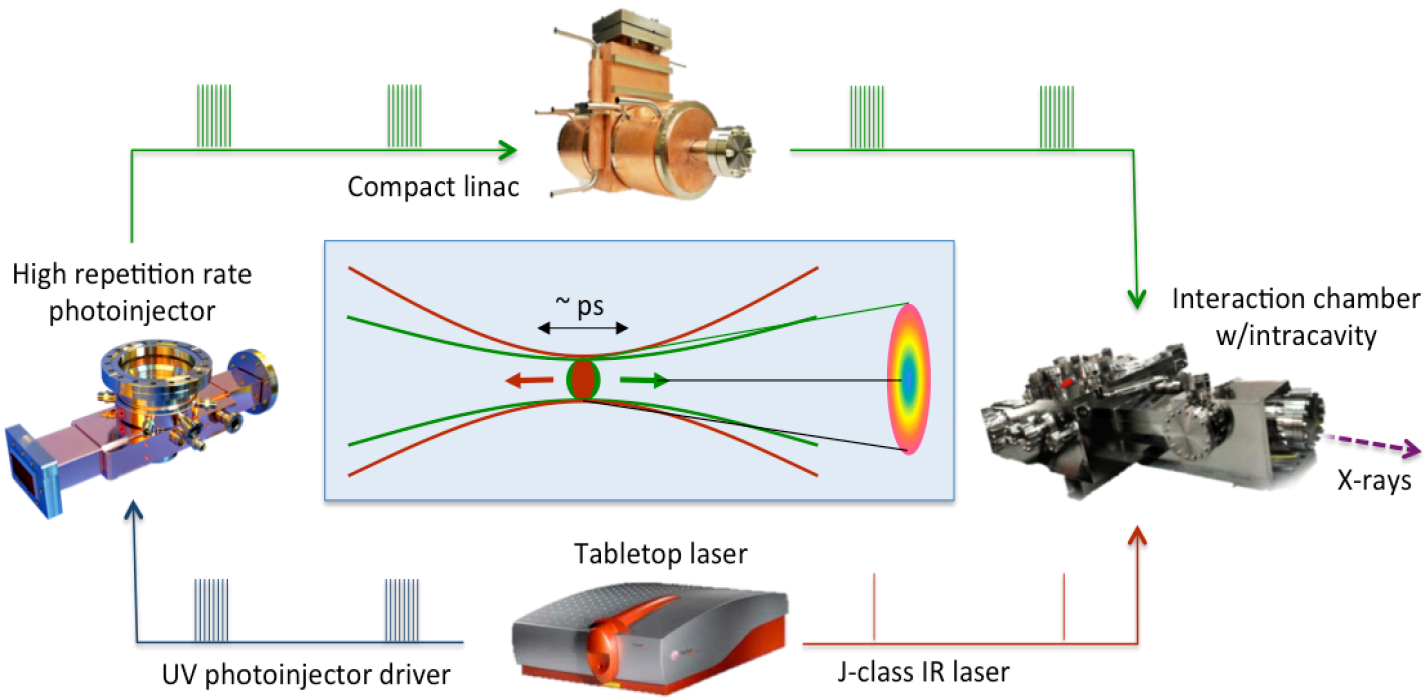

Such ICS system at Fermilab FAST facility offers unique opportunity to generate high power tunable gamma rays

RadiaBeam previous ICS experiment at BNL

- Installed CO2 amplifier next to the ATF beamline to demonstrate ICS in a pulse train mode for the first time (15 pulses in a train at 40 MHz)

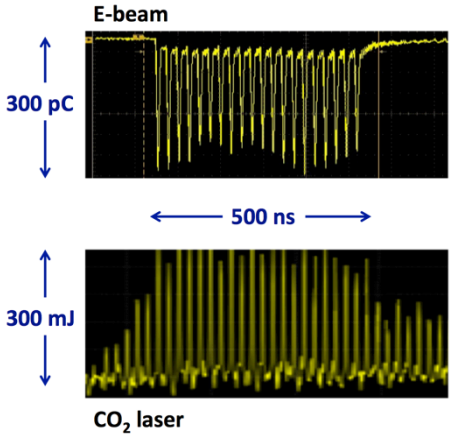

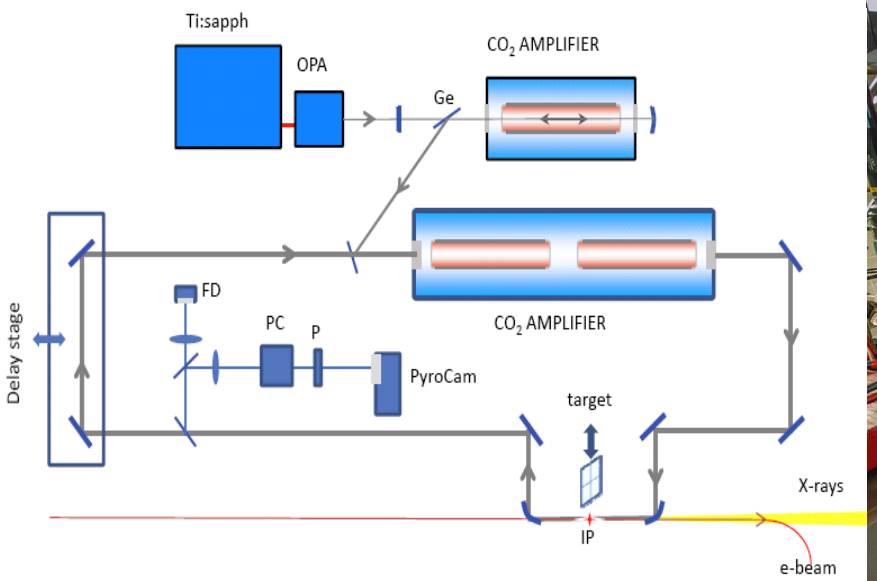

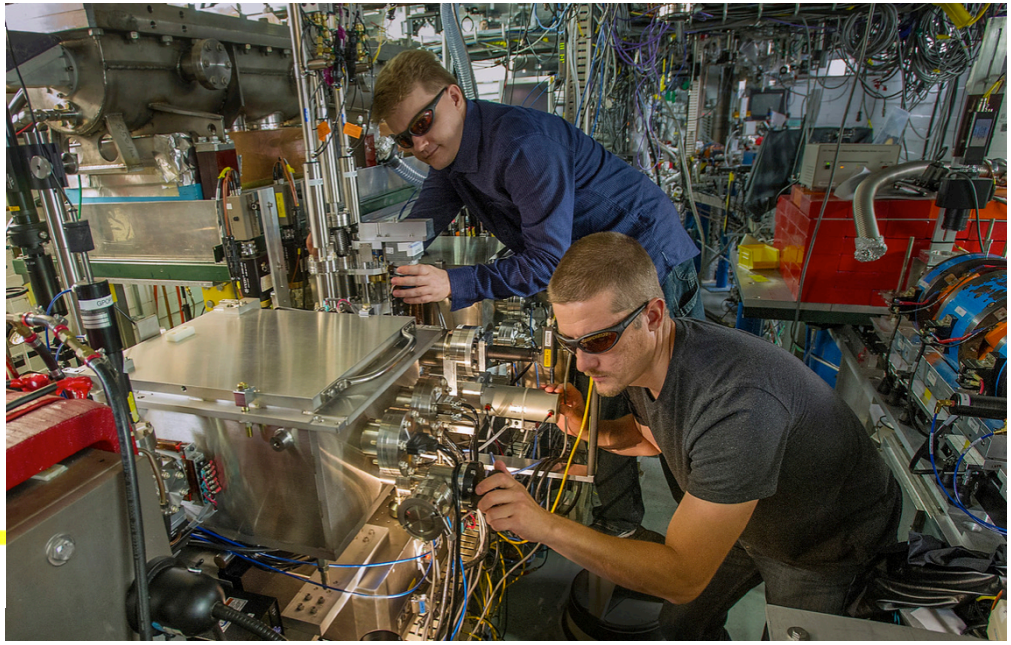

Pulse train ICS results (2015)

- Linear gain from 1 to 5 pulses (10^8 photons in a 5-pulse train)
- Improved stability (reduced shot-to-shot variations)

Electron Beam	
Spot size at IP, FWHM [μm]	180
Beam energy [MeV]	60
Charge per bunch [pC]	300
Bunch length, FWHM [ps]	6
Number of bunches	1-15
CO_2 Laser Pulse Train	
Waist size FWHM [μm]	190
Rayleigh range [mm]	8.8
Pulse energy [mJ]	300
Pulse length [ps]	5-150
Number of pulses	~20
Emitted X-Rays	
Photon energy [keV]	6.6
Radiation angle 1/γ [mrad]	8.5
Photon count at IP [single bunch]	2×10^7
Photon count at IP [5-pulse train]	10^8
Photon count at IP [15-bunch]	2×10^8

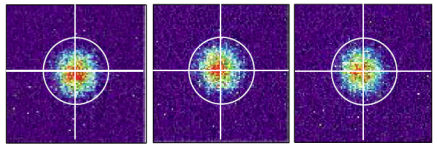

3 consecutive 5-pulse train shots

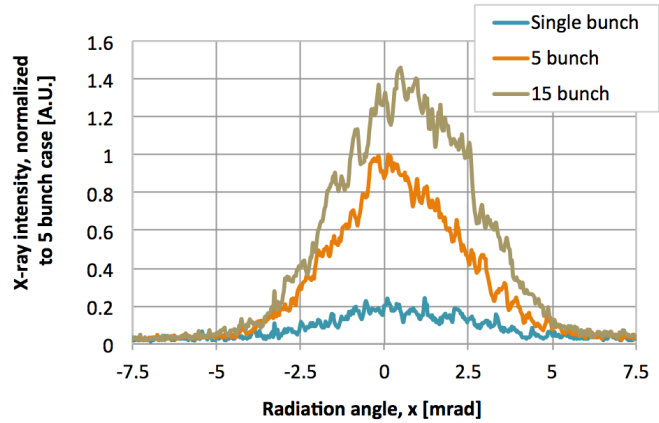

K-edge Fe foil filter transmission (for ICS spectrum diagnostics)

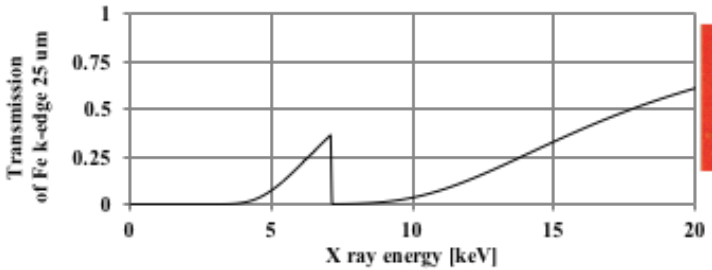

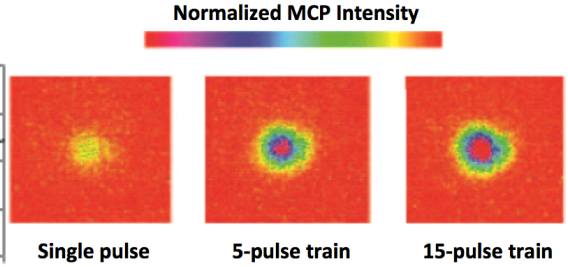

SCRF ICS at Fermilab

- Next step after BNL experiment is to show efficient interaction over long pulse trains
- NIU-led collaboration is developing a recirculated ICS (just started)
- New challenges are 3 MHz rep. rate and > 1000 pulses per train)
- Upon development the source will be capable of producing **10^{12} ph/s in 1% bandwidth** (tunable), and there is a space for the users station

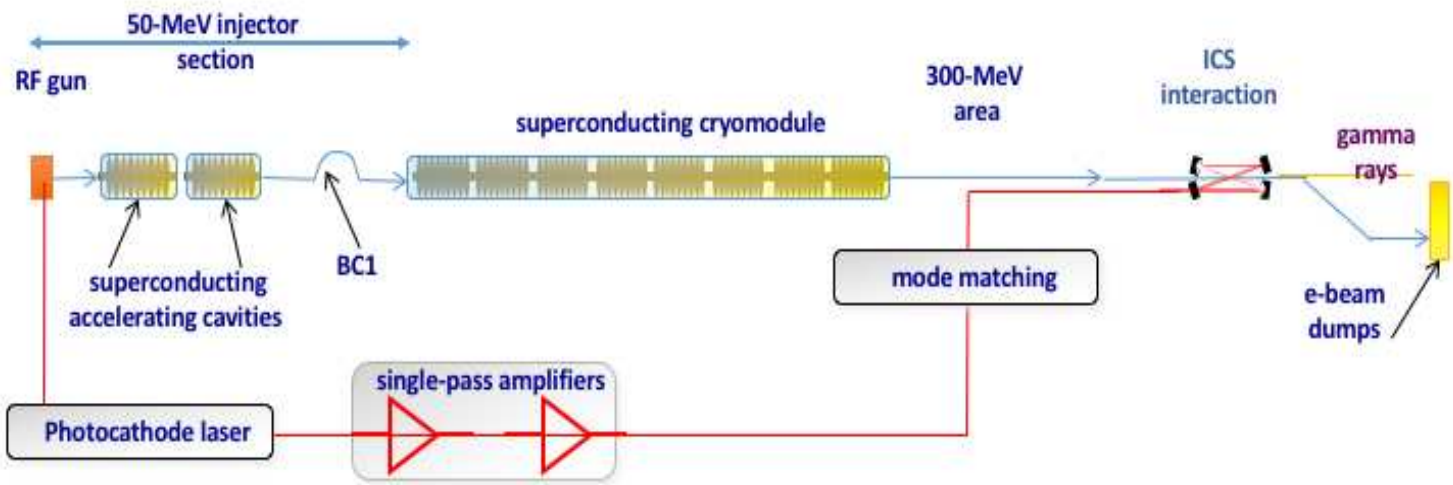

Summary and Thanks

radiabeam TECHNOLOGIES

- Presented several ongoing and nearly concluded collaborative projects ongoing at FAST/IOTA facility
  - IOTA insert, beamline optics, ICS
- Only possible through the contributions of numerous individuals and institutional support
- We sincerely appreciate all the collaborators and contributors who made this possible
  - Only possible through the contributions of numerous individuals and institutional support
- Thank you to the workshop organizers for the invitation to share this work with the community
- Thank you for the support provided from the DOE SBIR program

Backup Slides

Chamber Leak Fix Initial Concept

- Initial concept to beam penetrate through the port
  - EB welders were not comfortable with line of site

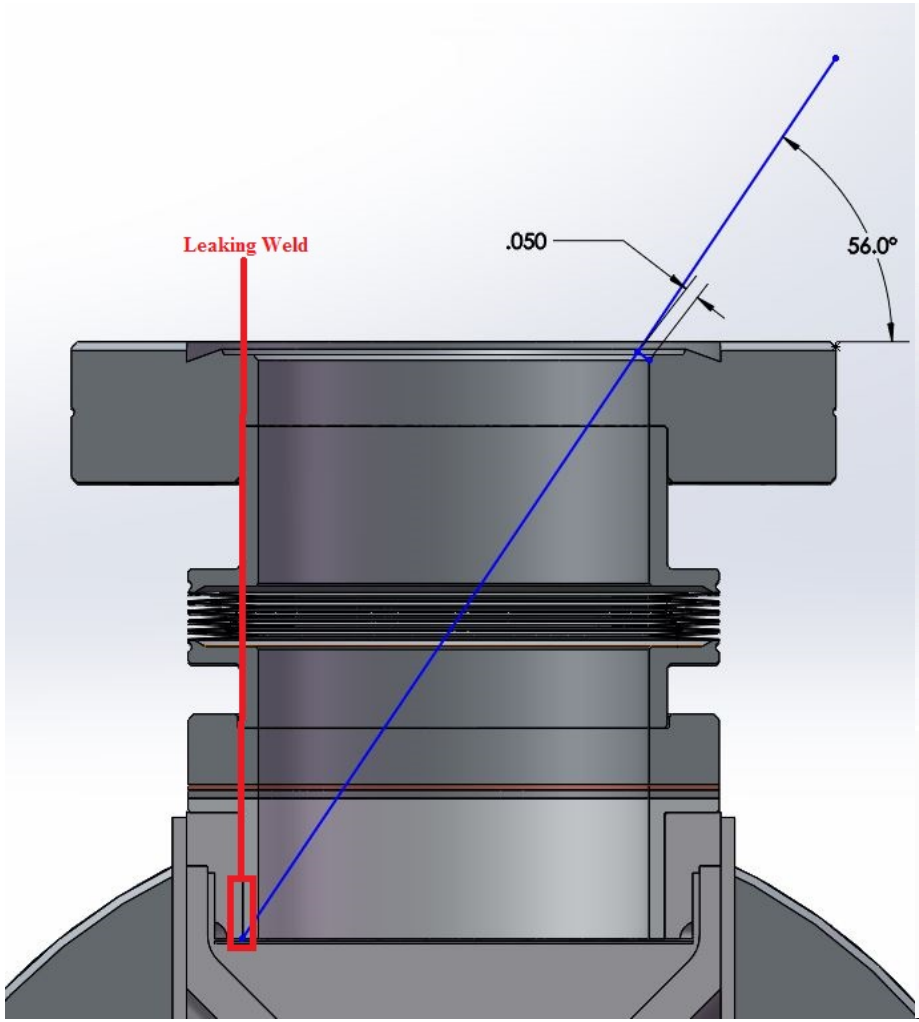

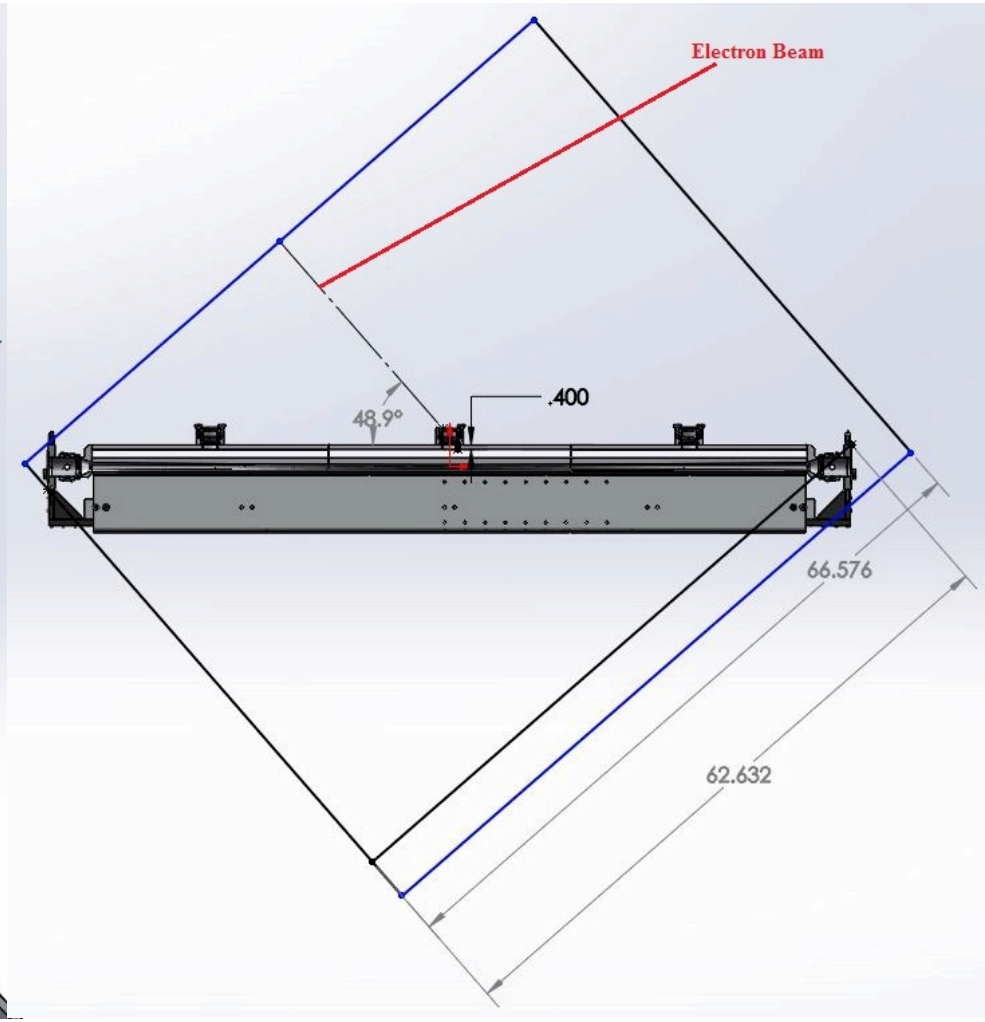

Test Chamber Pump-Down

- Pump: Pfeiffer HiPace 80 (67 L/s)
- Pressure Gauge: Pfeiffer PKR 261
  - Minimum Pressure: $3.74 * 10^{-9}$
- Pressure measurements began after a three day bake at 150°C and four days of vacuum pumping
- RGA partial pressure measurements taken concurrent to pressure and temperature measurements

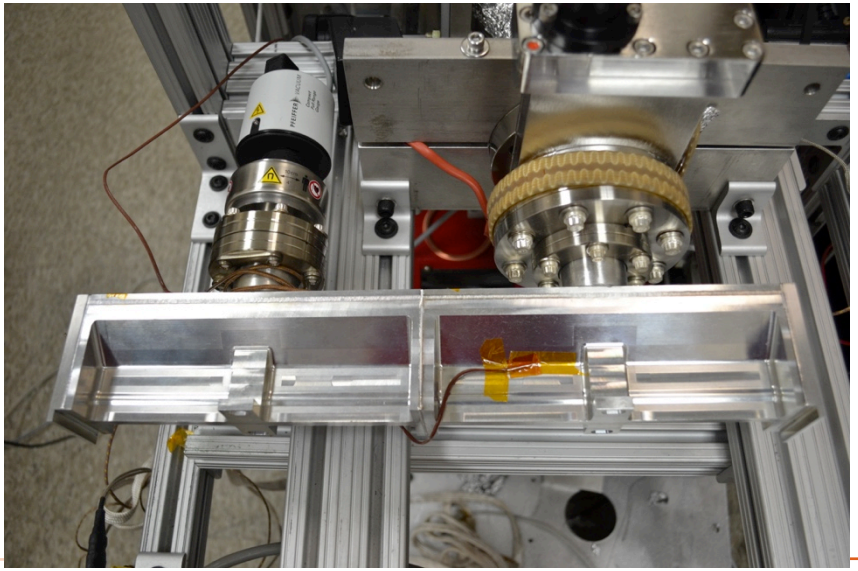

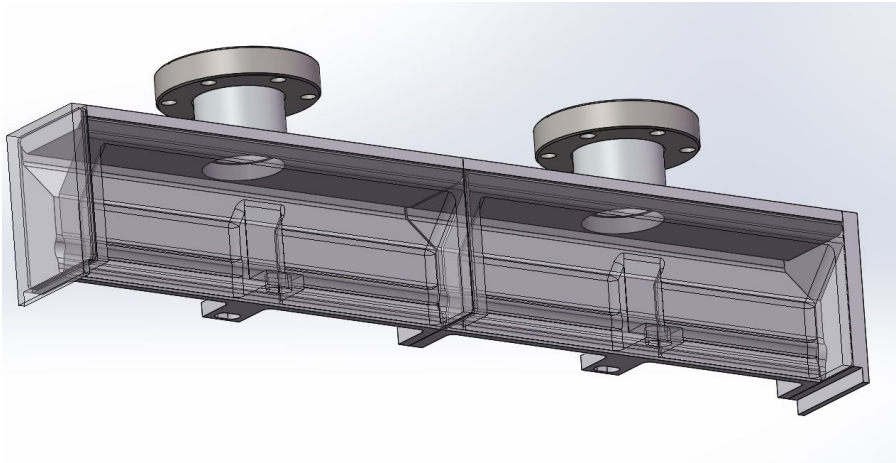

Test Chamber Data

- Internal Volume [V]: 0.3945 L
- Internal Surface Area [A]: 928.8949 cm^2
- Initial Pressure [P]: $5.78*10^{-9}$ torr
- Final Pressure [P]: $1.02*10^{-6}$ torr
- Average outgassing rate
  - $6.54*10^{-13}$ torr*L/s/cm^2 = 8.71 W/m^2

Estimated ultimate pressure of the final chamber

$P = 6*10^{-11}$ torr

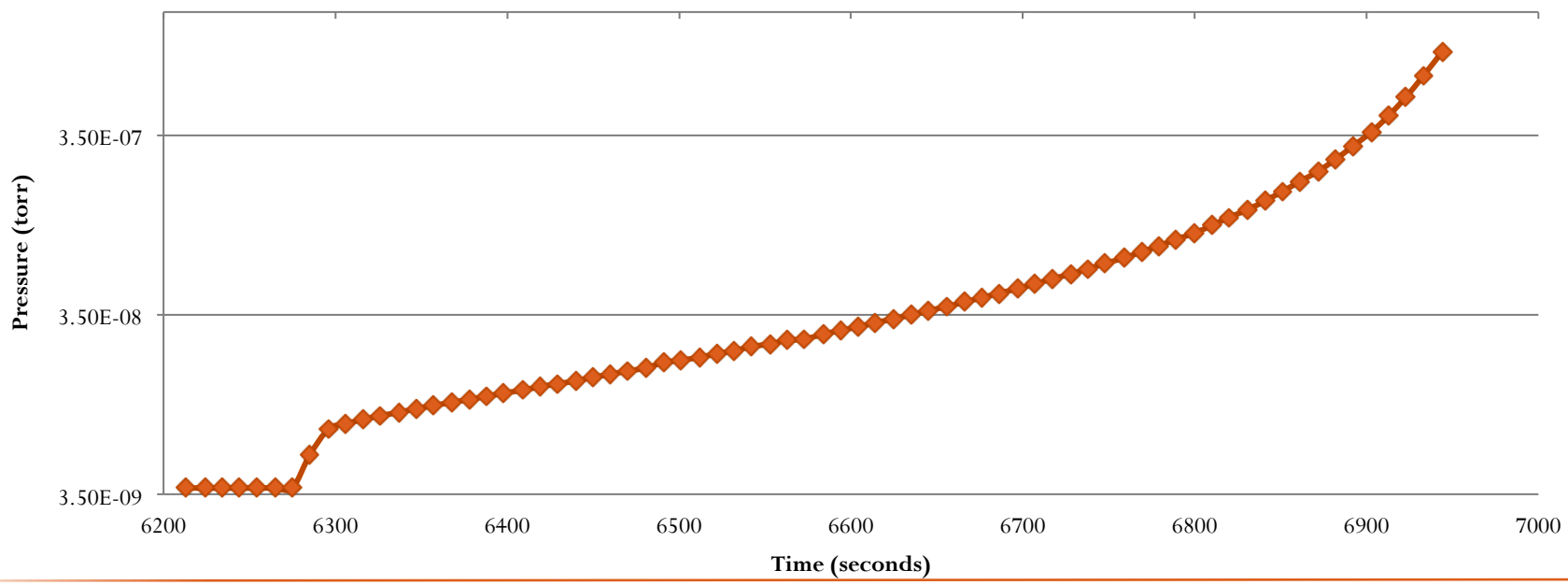

RBT Designed and Built Chambers
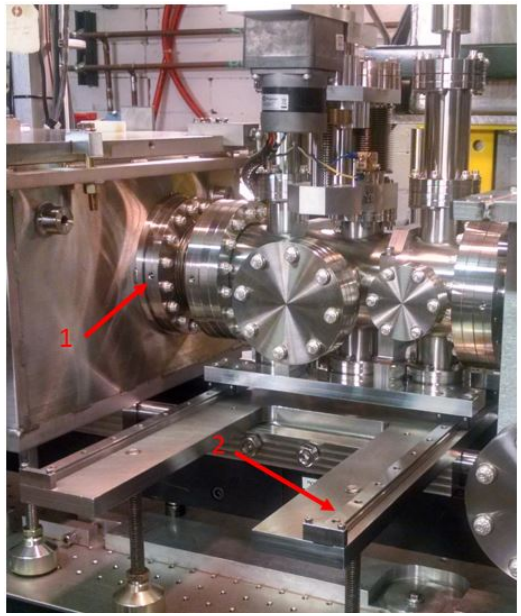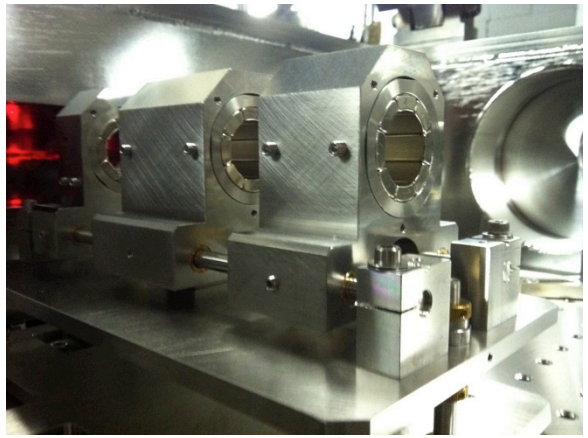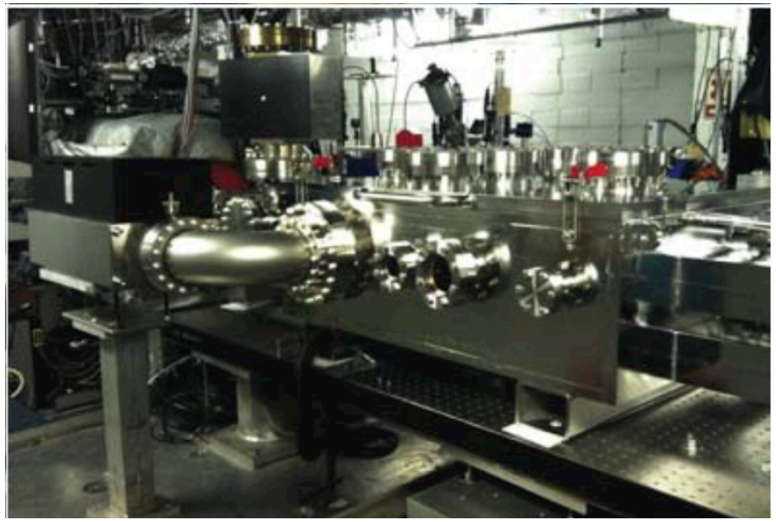
radiabeam TECHNOLOGIES