HUNTER - Heavy Unseen Neutrinos by Total Energy-momentum Reconstruction

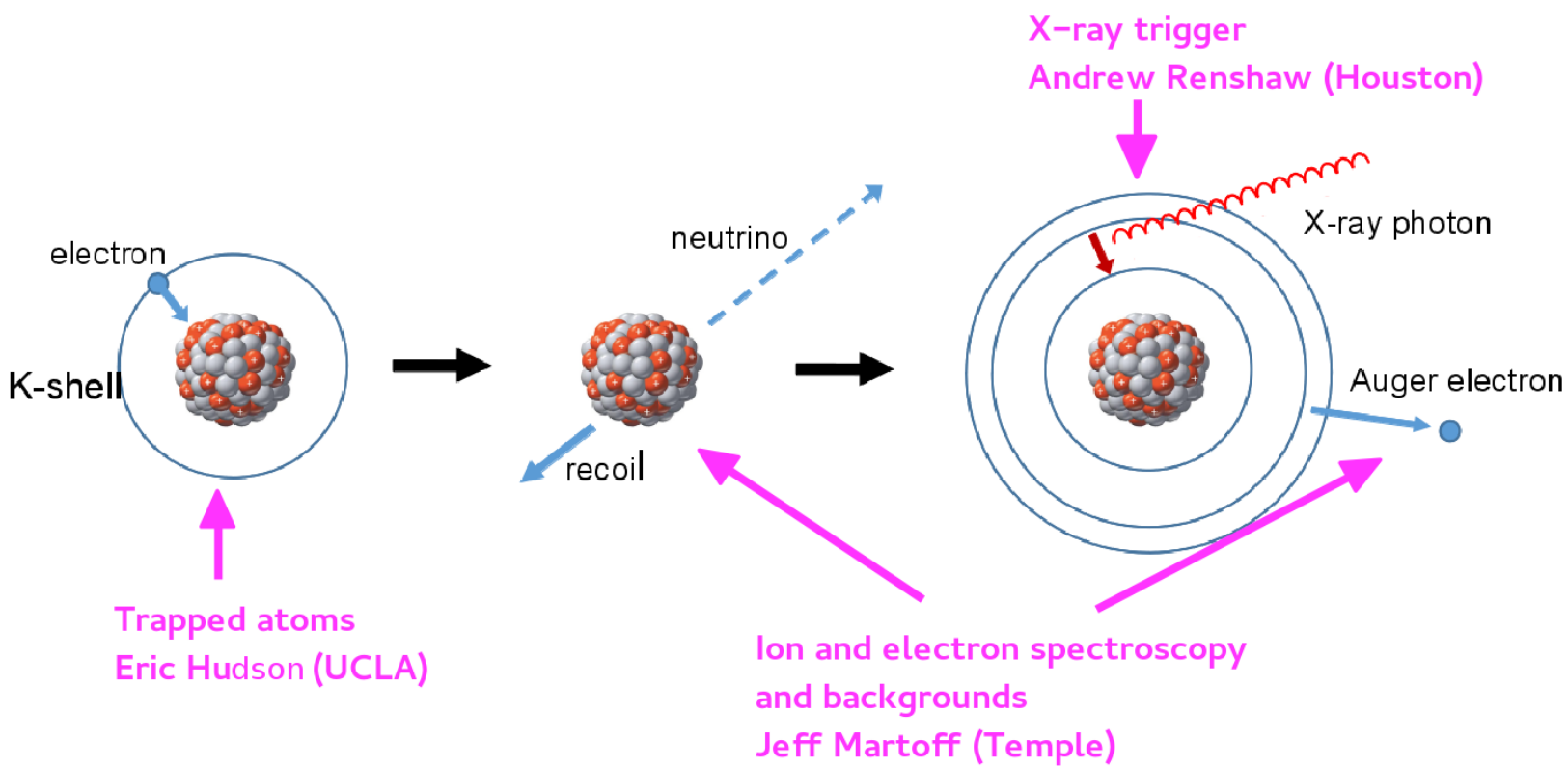

Strong scientific case for existence of keV Mass ‘sterile’ neutrinos

- Elementary particle physics: missing neutrinos needed – awaiting discovery

- Astrophysics: possible solution to the galactic dark matter problem (Shi & Fuller, PRL 82 (1999) 2832)

- Could be detected by a sensitive laboratory experiment without needing accelerators or underground operation

arXiv:1607:06876

Addition of sterile neutrino states

- Pre-1980: neutrinos thought zero mass with only LH states (& anti-neutrinos RH)
- Post-1980: Neutrinos confirmed to have have small but non-zero masses
- Non-zero mass indicates both LH and RH states should exist, but not yet seen

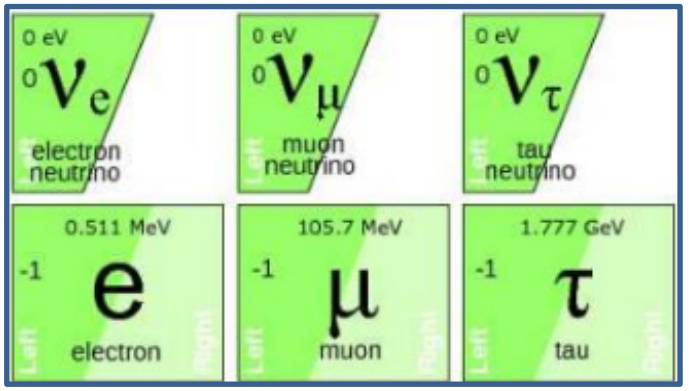

- Thus the missing neutrinos must have either high mass or Interaction strength much weaker than known neutrinos
- Hence named 'sterile' (= 'quasi sterile')
- No clear prediction of mass

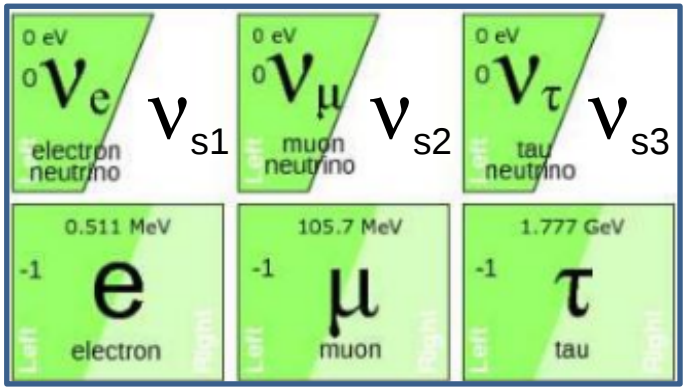

HUNTER Concept

Key technologies enable a ground-breaking search for keV-mass sterile neutrinos using low energy nuclear decays:

Magneto Optical Trap (MOT) => near-perfect, interaction-free source

- Density >10^{10}/cm^3 (~10^{-9} bar, very "thin" source)
- Radius (1 - few) mm
- Trapped atoms 10^8-10^{11} (10^2-10^5 Bq for τ=10 days)
- Trapped atoms temperature 20μK ---> (R&D) 2μK

Reaction Microscope (MOTRiMS)

- Electro-magnetostatic spectrometers, MCP detection
- High accuracy momentum measurements for low-energy charged particles

Large-area x-ray detector with high spatial- and energy-resolution

- Fine-grained SiPM readout of thin LYSO scintillators

Basic Kinematics

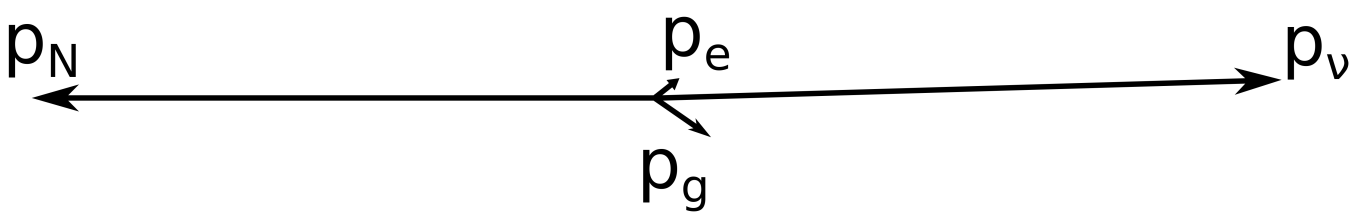

p_N , p_ν ~ .35 MeV/c v_N ~ 800 m/s

p_e ~ .01 MeV/c, p_g ~ .03 MeV/c

$m_\nu^2 = [Q - E_e - E_g - E_N]^2 - [\mathbf{p}_g + \mathbf{p}_e + \mathbf{p}_N]^2$

Ignore e and x-ray, calculate effect of m_ν on p_N:

$p^2/2m_N + (p^2+m_\nu^2)^{1/2} - m_\nu = Q$

Accurate first-order solution: $p= Q(1 - m_\nu^2/2Q^2)$

For m_ν =10 keV, effect is .04% of p !

This sets the scale of measurement accuracy needed.

Note: this δp is equal to the thermal momentum p_{th} at 150 μK.

Trapped atoms must be colder than this by factor 3 or more.

Detector Layout in Modular Vacuum System

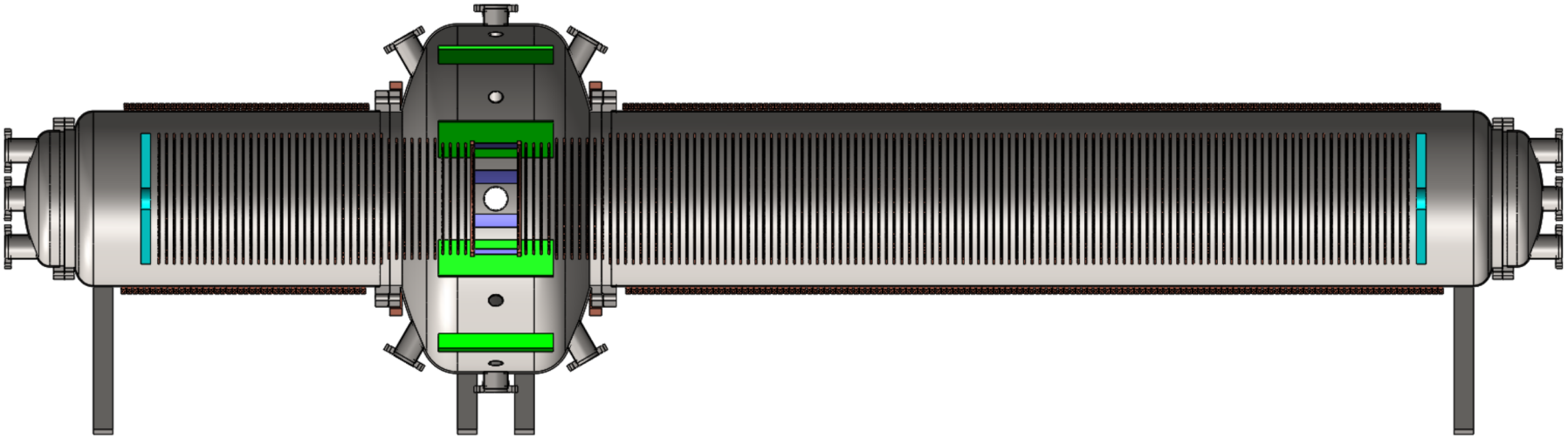

Green: x-ray scintillator arrays
Blue (right): electron microchannel plate(s)
Blue (left) ion microchannel plate(s)
Rings- spectrometers field cages & coils)

Laser Cooling and Trapping

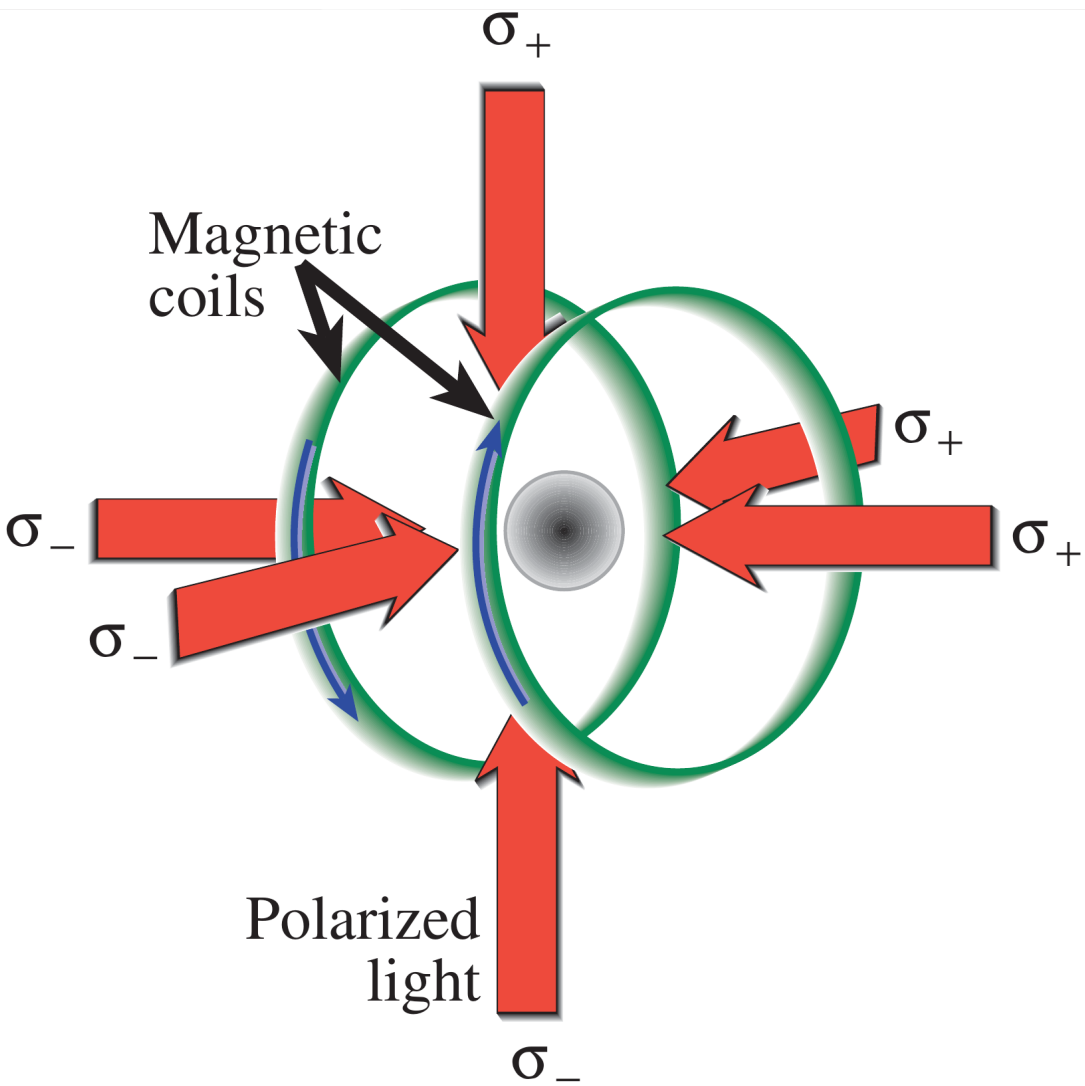

- 3 laser pairs => 3-D damping, cooling
- Addition of Zeeman-shifting **B**-field gradient and polarization trick => **"MOT"** with 3-D <u>restoring</u> force

Spectrometers- "Reaction Microscope"

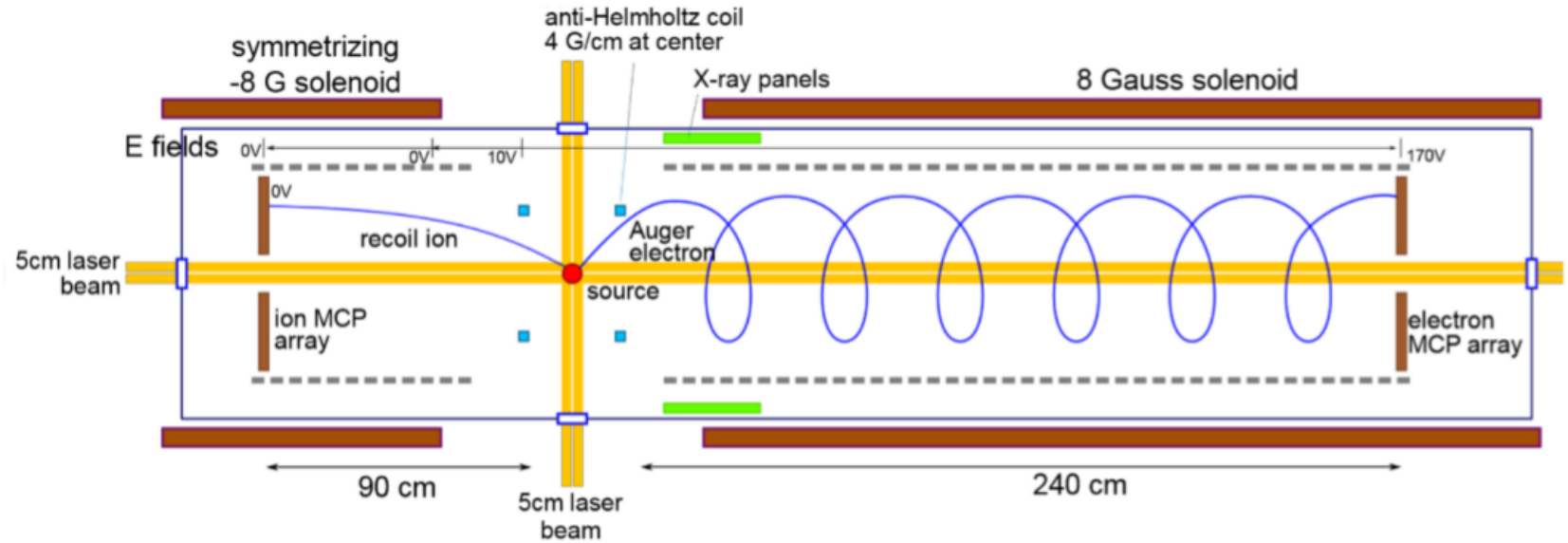

Fig 3.5: Arrangement of detectors and MOT source inside ultra-high vacuum vessel.

- Axial (magneto-)electrostatic spectrometer developed for chemical reaction studies
- Recoil ions collected from up to 4π and steered onto MCP's by axial electric field
- Electrons collected from 6% of 4π into confining axial magnetic field (solenoid)
- x-rays on pixelated scintillator panels provide TOF start
- Very accurate charged-particle vector momenta from TOF and spatial resolution of MCP

Decay and Trigger Details

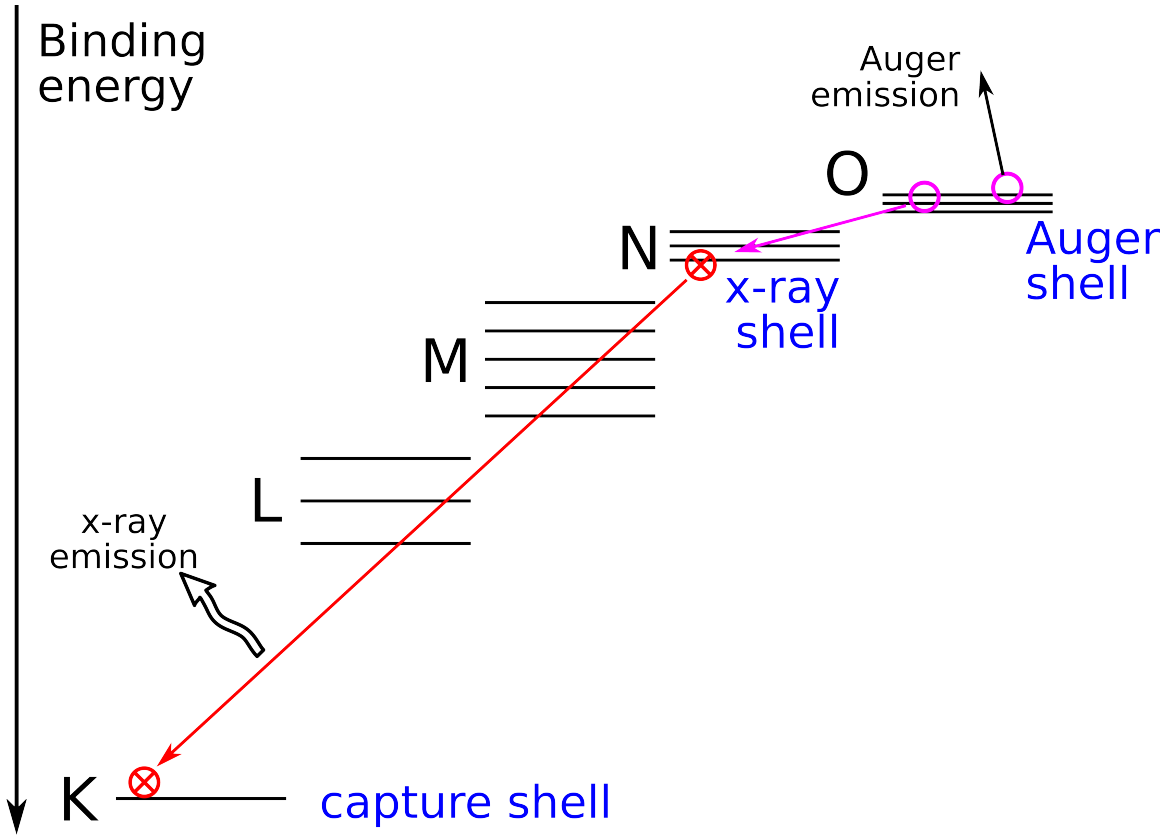

- Initial electron capture mainly from K, L, M shells. "O" is valence shell.
- Re-filling electron can come from any (higher) shell, emits x-ray
- Re-filling vacancy then itself filled, usually with Auger emission(s) instead of x-ray
- Initially select: K-capture, N x-ray, N and O Auger (but only 2.5% of decays!)
  - Higher x-ray energy gives better timing resolution
  - Lower Auger multiplicity gives better detection efficiency
  - Lower Auger energy gives more TOF accuracy

Apparatus Length from TOF Resolution

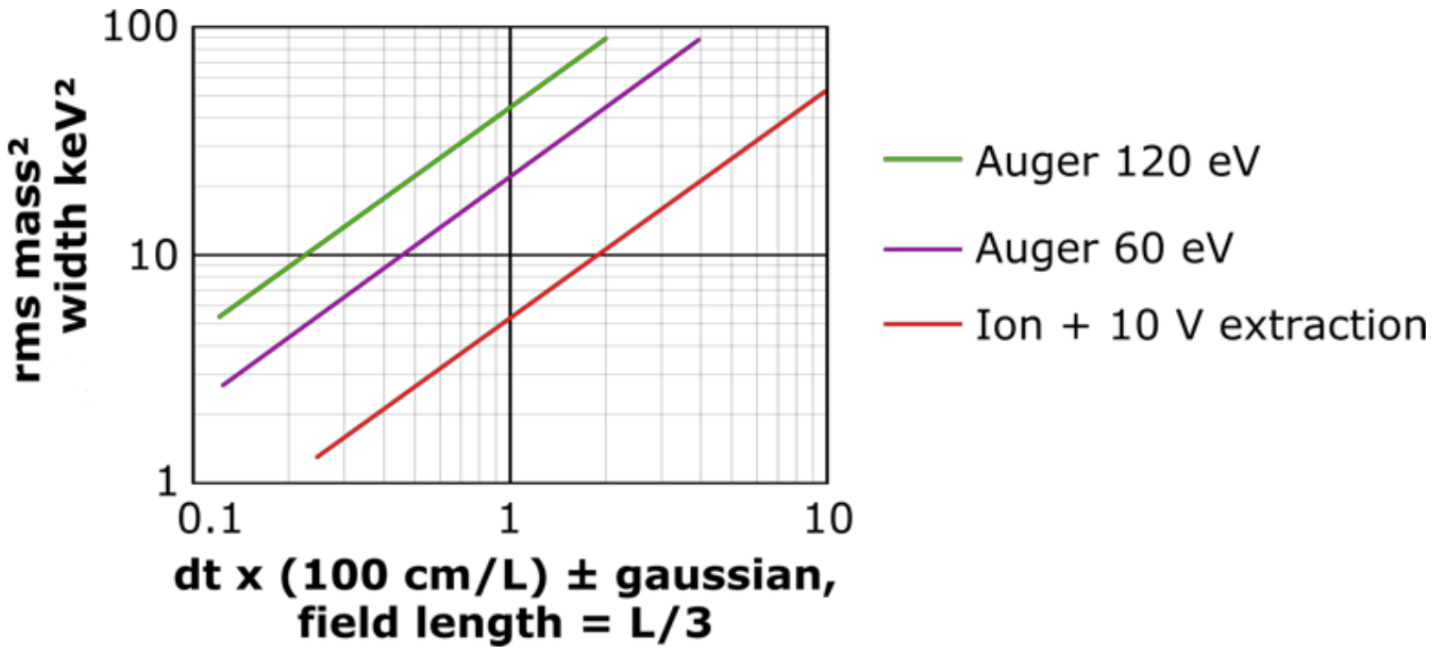

- Detector timing resolutions: x-ray 0.8 ns, MCP 0.3 ns => combined TOF resolution will be ~1 ns
- For a longer flight path, this 1 ns corresponds to smaller velocity (momentum) error
- Reconstruction equation => effect of momentum measurement errors on m_ν^2
- Resulting relationship between mass-squared error, flight path **L** and TOF errors shown above
- For 5-σ separation of $(7\ \text{keV})^2$ peak from zero mass, need 100 cm for ions, 240 cm for electrons

Choice of Isotope

Important considerations for this experiment:

- Prefer EC - low energy visible products => E/**p** by TOF
- Prefer alkali for ease of trapping
- Select $t_{1/2}$> 1 day (no accelerator beam)
- Consider isotope availability (medical)

These reduce >60 possible nuclides to essentially one; 131-Cs.

131-Cs Decay

$t_{1/2}$=9.7 da, EC 100%,

Q_{EC}=355 keV

131-Cs -> 131-Xe (stable)

+ν

+ x-rays (4-35 keV)

+ Auger e-'s (3-150 eV)

No penetrating radiation, no radioactive daughter.

Commercially available

(IsoRay brachytherapy seeds)

$10K/order + $1K/Ci

More About Resolution - Longitudinal

- MOT particle density limited by collisional losses to ~few x $10^{10}/cm^3$
- Thus for high MOT occupancy, must tolerate 1 mm or larger MOT radius
- But extended source => spread in TOF distances !
- Problem has been solved in standard RIM- "Time Focusing"

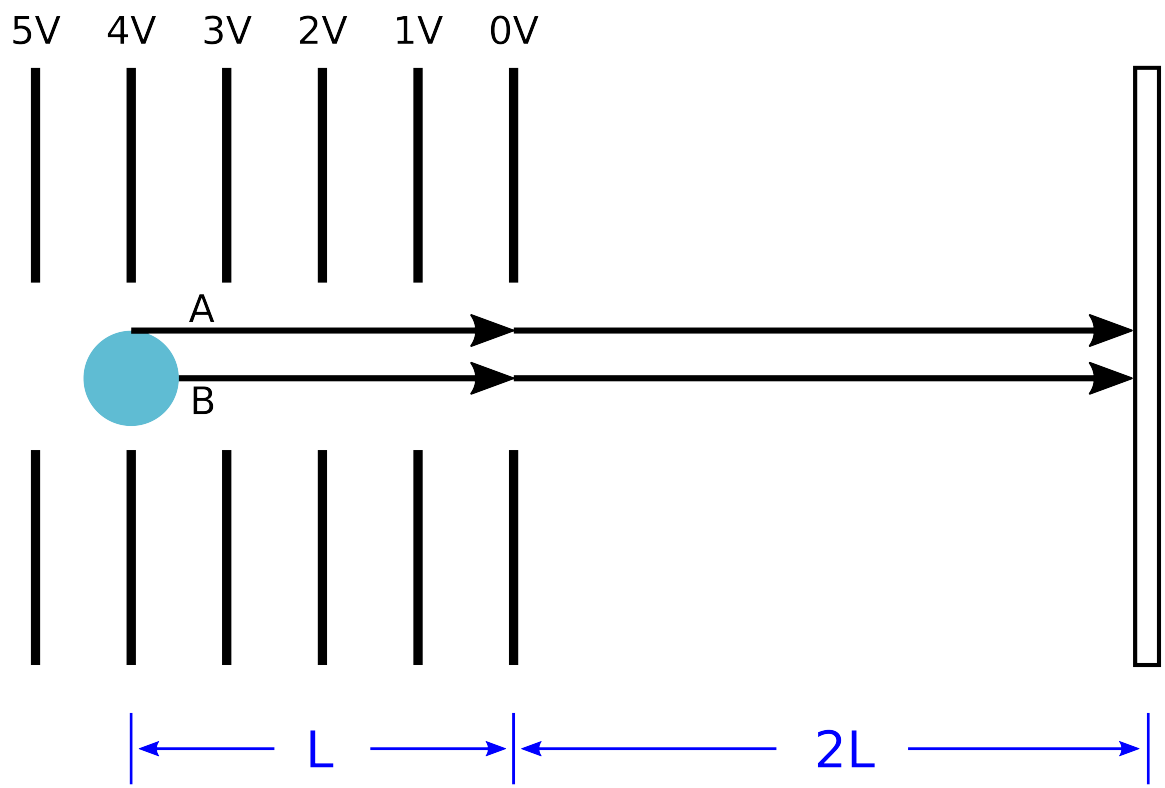

- Uniform accelerating field region nominal length L, drift region 2L.
- "A" is accelerated longer than "B". So A gains more speed than B, flies faster.
- ICBST for L, 2L the TOF is first-order independent of axial origin.

MOT Size and Resolution -Transverse

- Also solved in standard RIM

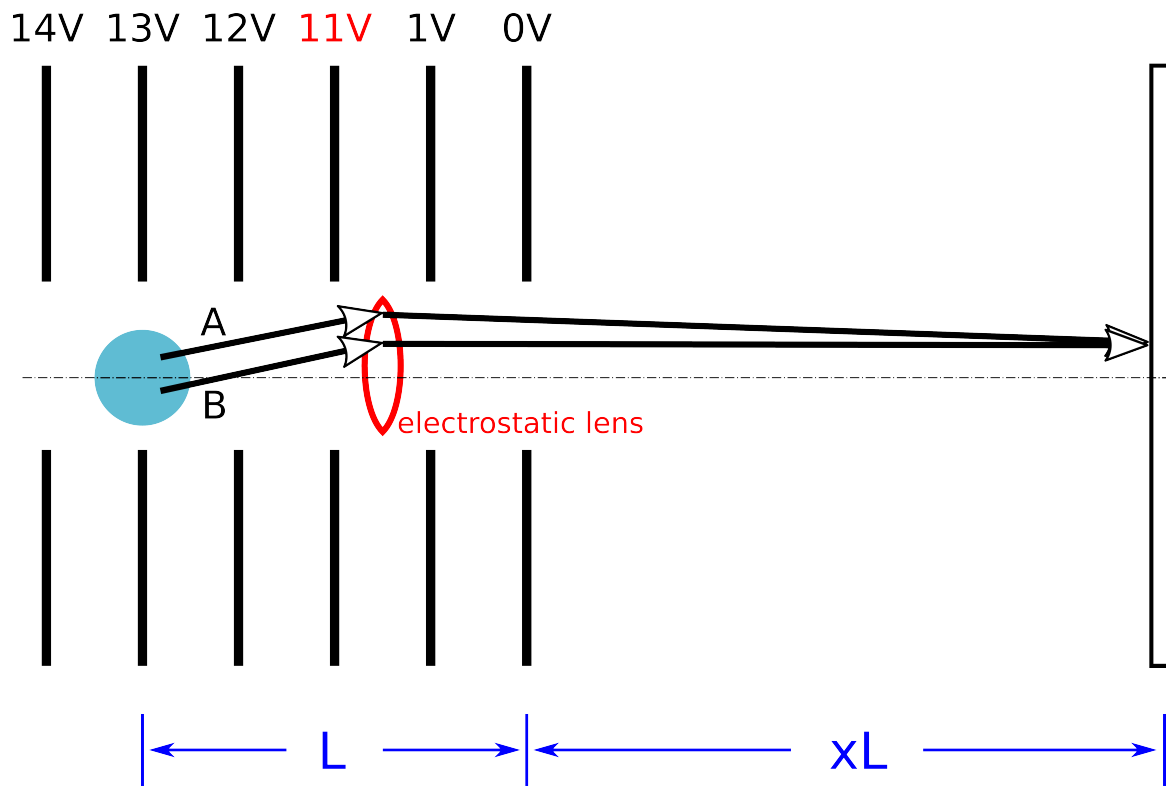

- Electrostatic lens created by large potential step- analogy to optical thin lens
- "A" and "B" have same transverse angle (momentum), different transverse origin
- Lens can focus these parallel rays at a single off-axis position, removing effect of
- transverse source size.
- Magnetostatic lens also possible
- Tune Transverse and "Time" focusing to one image plane via ΔV and "x"

Ion Spectrometer Simulations

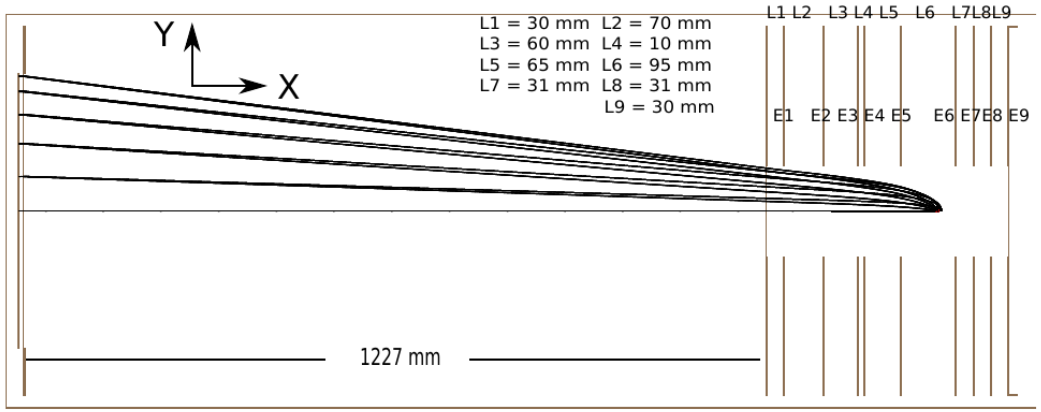

SimIon-Lua Resolution Optimization

Longitudinal:

Momentum(MeV/c)	0.18	-0.18	0.174	-0.174	0.156	-0.156
Relative Resolution(%)	0.0127	0.0210	0.0160	0.0221	0.0243	0.0244
Mean Value (μs)	334.46	303.00	333.90	303.52	332.27	305.05
Standard deviation (μs)	0.0020	0.0033	0.0024	0.0034	0.0033	0.0033

Momentum(MeV/c)	0.127	-0.127	0.09	-0.09	0.0466	-0.0466
Relative Resolution(%)	0.0346	0.0278	0.0476	0.0326	0.0733	0.0462
Mean Value (μs)	329.68	307.49	326.33	310.68	322.50	314.41
Standard deviation (μs)	0.0039	0.0031	0.0037	0.0026	0.0030	0.0019

Transverse::

Momentum(MeV/c)	0	0.0466	0.09	0.127	0.156	0.174
Relative Resolution(%)	0	0.0681	0.0289	0.0319	0.0168	0.0168
Mean Value (mm)	-0.0057	52.664	102.12	145.36	179.45	201.50
Standard deviation (mm)	0.0324	0.0367	0.0301	0.0469	0.0304	0.0337

Electron Spectrometer Simulations

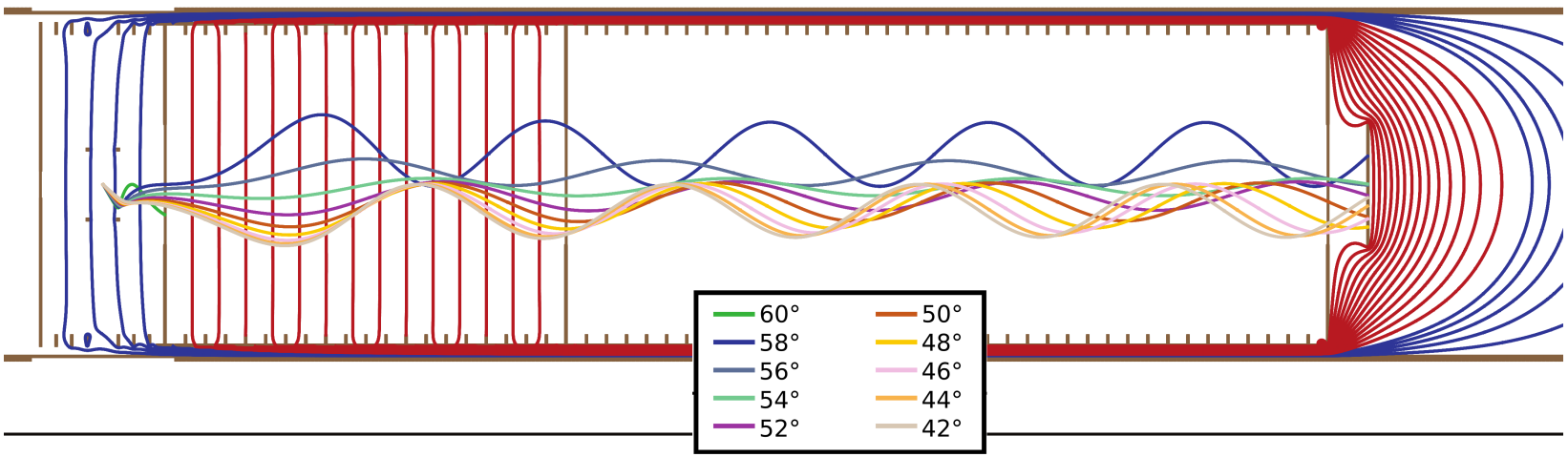

- Resolution requirement is relatively modest since p_e is small
- Tracks spiral in magnetic field to contain transverse extent

Suppressing Trap-Loading Background

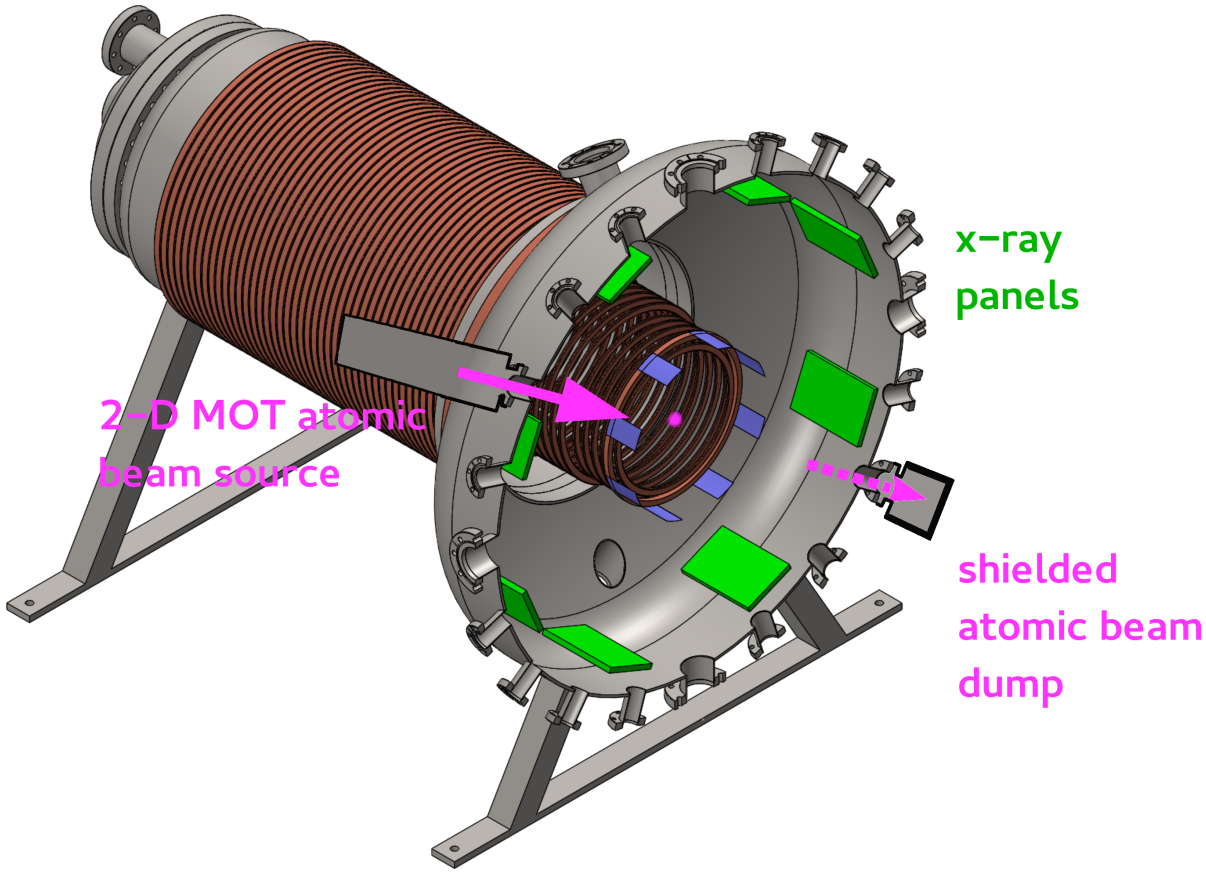

- Trap is loaded continuously from external atomic-beam-like source
- Not all incoming atoms are trapped (R&D subject)
- Un-trapped 131-Cs is contained in a shielded dump

Backgrounds from Finite MOT Lifetime

escaping 131-Cs will stick on detectors
131-Cs will also stick on electrodes

Assume:
- 10^8 atoms in MOT (80/s decays)
- 131-Cs mean life 1.3×10^6 s

True e-x coincidences: .1/sec

Assume MOT trap lifetime only 100 s.
Out-of-MOT decay rates after 1000 s:
- on ion(e-) MCP: .67(.12)/s
- on x-ray scint: 64/s
- on electrodes: 175/s

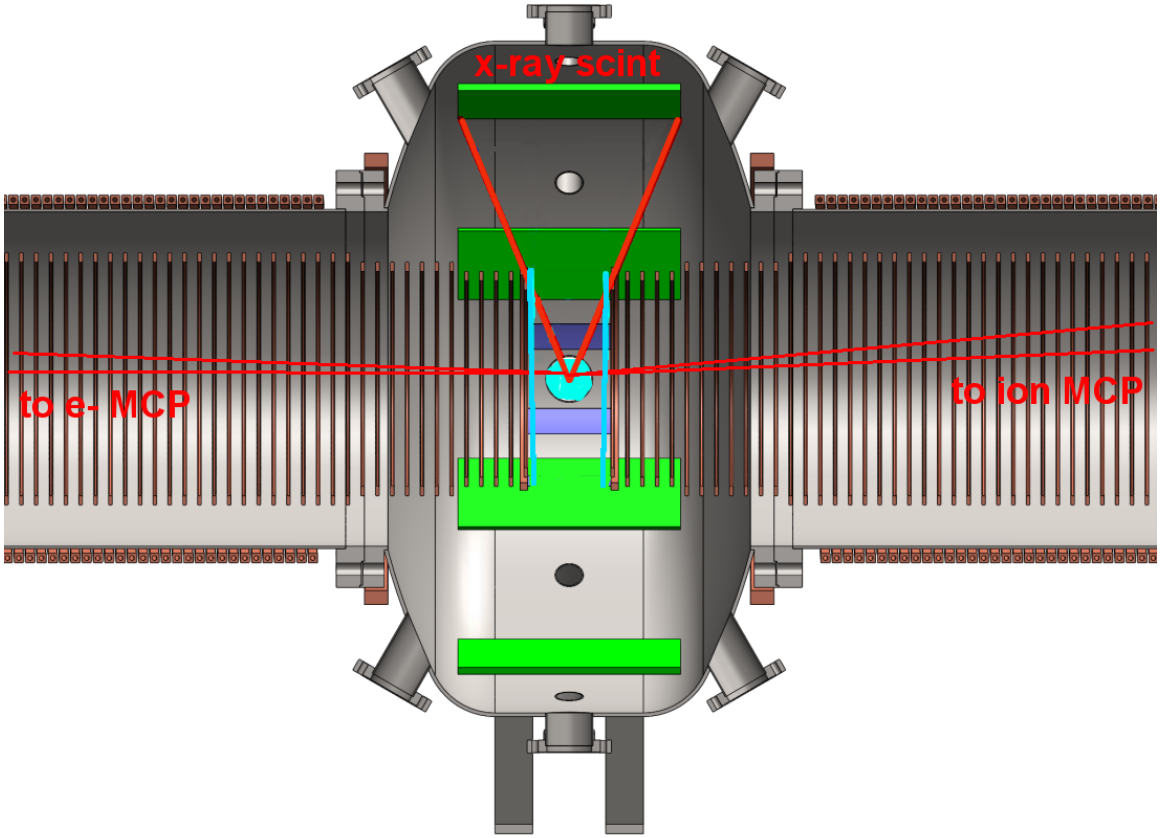

Accidentals (e- MCP * x-ray):
- x-ray singles dominated by decays on panels themselves and on electrodes (15/s)
- e- singles dominated by decays on MCP (.33/s)
- 100 ns gate => accidental rate: ~1×10^{-6}/s

Backgrounds from Finite MOT Lifetime

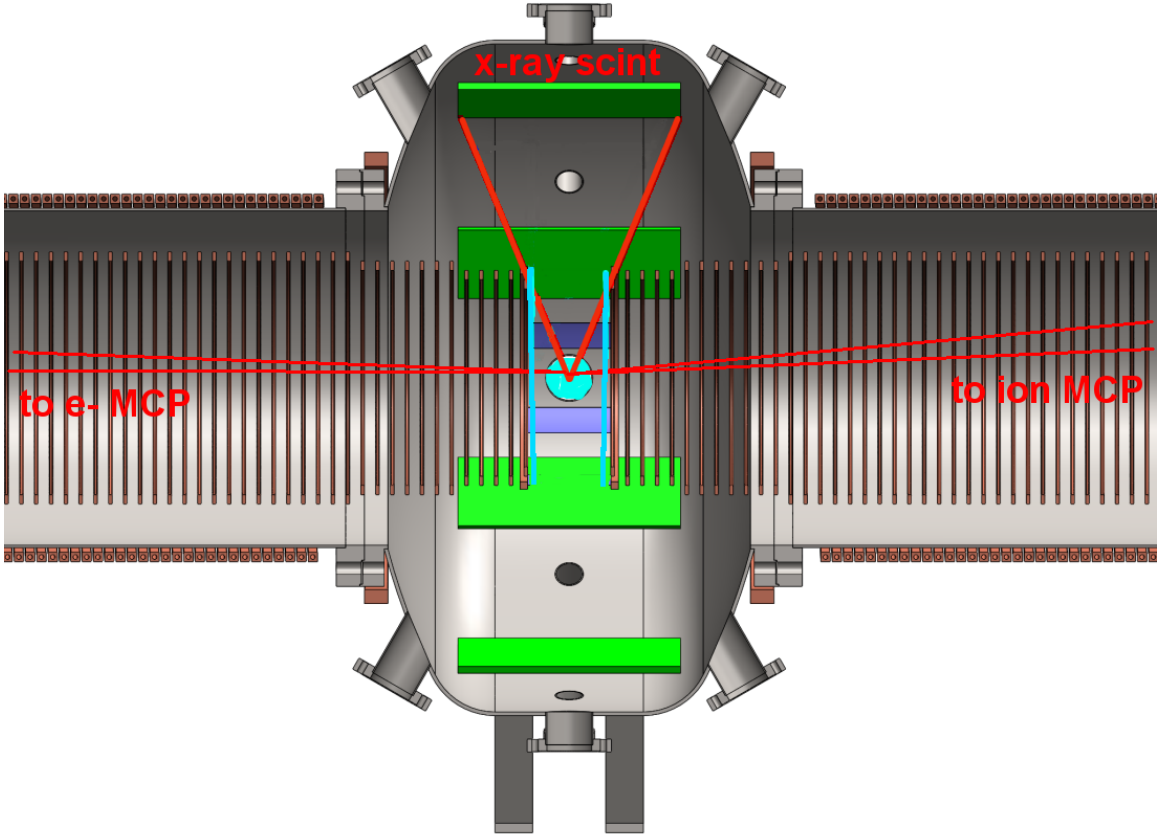

- As 131-Cs escapes build up, accidentals grow with time
- With above assumptions, after 4-5 days, true:accidental ~1 (integrated trap loss .01 mCi)
- Radioactive atoms can then be de-sorbed from electrodes and x-ray panels by UV light
- Changes of geometry (electrodes, baffles) still under study, some development needed

Technical Risks

- Design is based on commercially available components
- However, performance requirements push the envelope

Main technical risks:

1) Chemistry and handling of 131-Cs may limit running time
2) Regulatory/Safety issues, possession limits for 131-Cs may limit running time
3) Resolution requirements for ion spectrometer to reach m_ν=10 keV are very strict
4) Resolution requirements for x-rays to reach m_ν=10 keV are very strict

Mitigation Strategies:

1), 2): Methods adapted from running Radium experiment. 131-Cs operation to be at UCLA site where radioactive materials have been used for trapping before, and trust relationship is established. Permitted activities will likely evolve over time as safety record is established.

3), 4) Detailed modeling and consultations with manufacturers are continuing. Performance will likely evolve as experience is gained and adjustment/calibration procedures develop. Limits for higher masses are still novel and constraining to particle physics models.

Phasing and Upgrades

First phase of experiment is cost limited:

- 1/4 MCP's @ $200K
- 1/10 x-ray array @ $400K

But will demonstrate the method and set new limits over much of the interesting mass range.

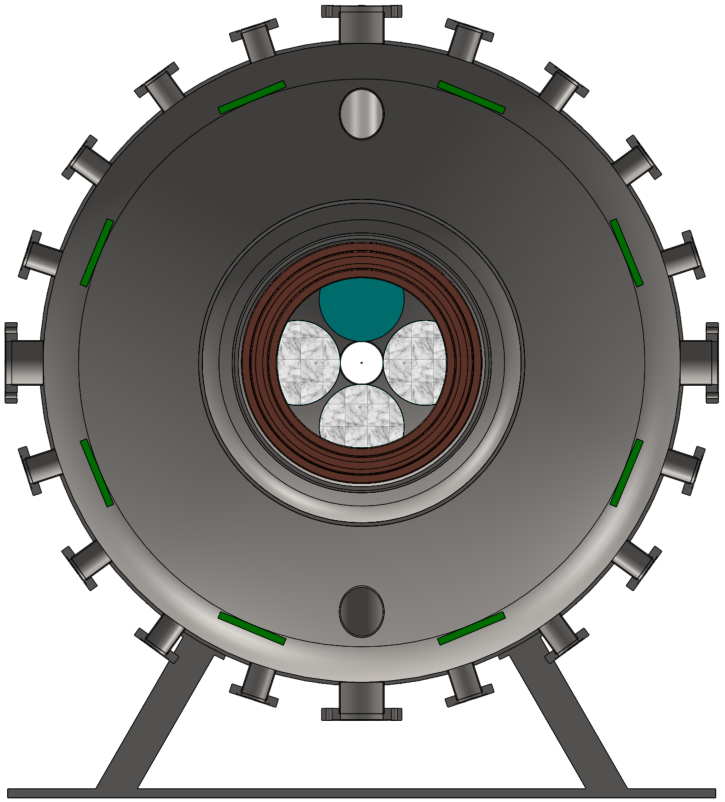

Phasing and Limits

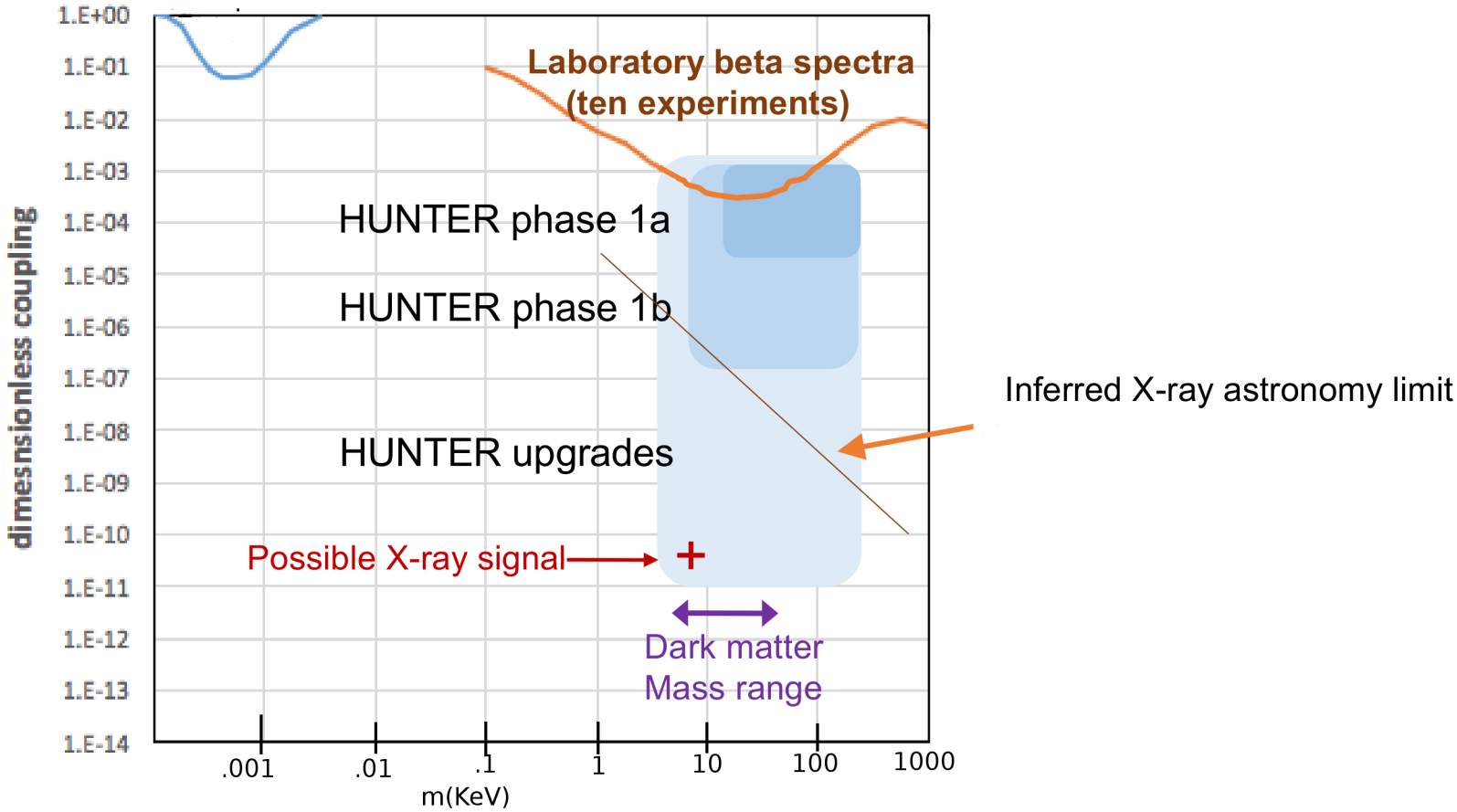

Later phases would include acceptance and trap population upgrades to progressively improve limits.

EXTRAS

Laser Cooling and Trapping

(Raab et al, 1987)

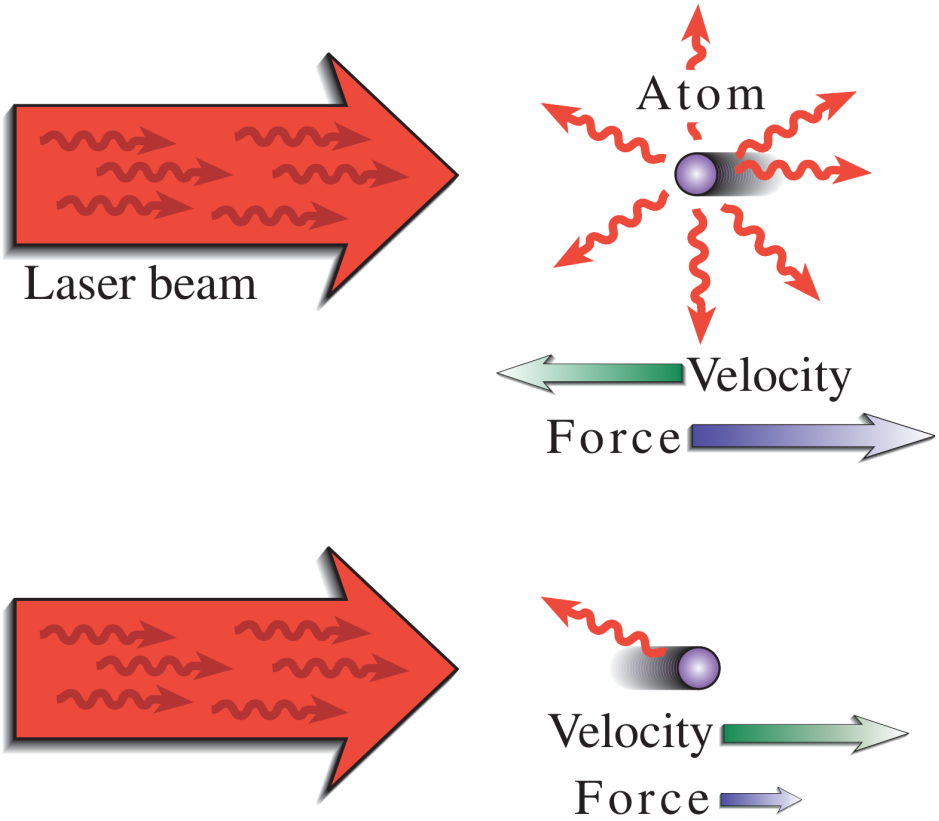

- Absorption & re-emission of light red-detuned from resonance produces a velocity-dependent force, due to Doppler shift tuning.

Laser Cooling and Trapping

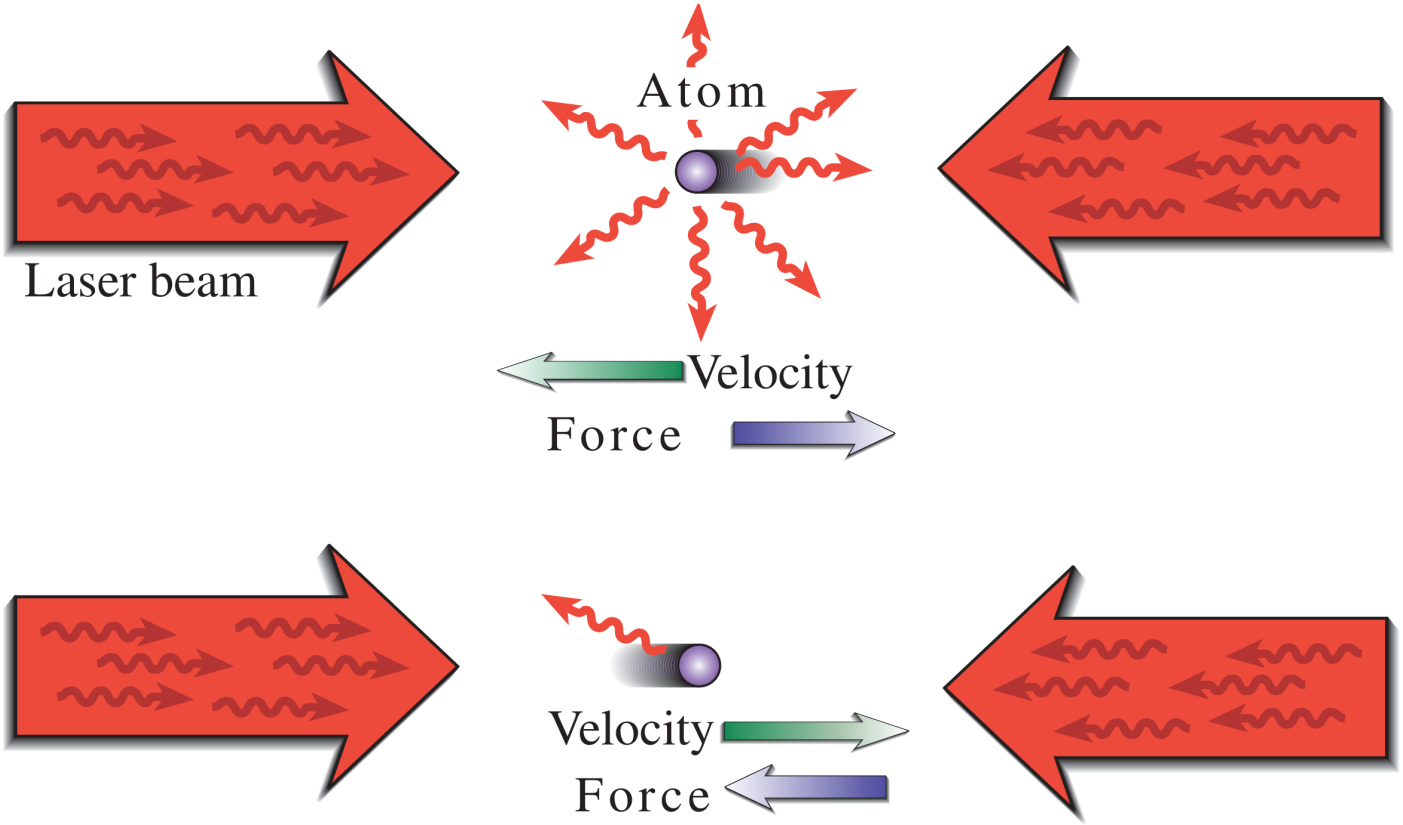

- Adding a counter-propagating laser produces true 1-D damping ("Optical Molasses")

Apparatus Diameter from Spatial Res.

- Reconstruction => effect of angular measurement errors on m_ν^2
- For 5-σ separation of $(7\ \text{keV})^2$ peak from zero mass, need 0.6 milliradian resolution for x-rays and ions, 2 milliradian for typical Augers
- x-ray panel at 40 cm distance with 0.3 mm interpolated position resolution
- ion MCP resolution 30 microns => need 30 cm lateral spread

Electron Spectrometer Simulations

- 4 Gauss/cm gradient at source is required for CW operation of MOT
- Two problems with this:
  - Field matching problem with 6 Gauss solenoid => limits electron acceptance angle
  - Conventional analytic RIM reconstruction assumes homogeneous **B**
- Reconstruction has been made to work using table-lookup
- Rate optimization with AC MOT (periodically turn off gradient) under study

Trigger Scheme

	Phase 1a	Phase 1b	Phase 2a	Phase 2b
capture shells	K	K	K+L	K+L
x-rays used:	N	N	M,N	M+N
Augers: initial vacancy	N2,N3	N2,N3	M,N	M+N
Augers: average number per trigger	1.5	1.580	2	2
atoms in MOT	1.10^{8}	1.10^{9}	1.10^{11}	10x 1.10^{11}
Decays				
Total decays per year per atom = 0.7*365/9.7	26	26	26	26
fraction of decays giving M2,3 or N2,3 vacancy	0.025	0.025	0.1	0.1
trigger x-rays/y/atom	0.65	0.65	2.6	2.6
Efficiencies				
ion capture fraction (2 hemispheres)	0.07	0.3	0.4	0.4
ion detection efficiency	0.55	0.55	0.6	0.6
electron capture fraction (electric field + MCP)	$0.06^{1.5}$	$0.24^{1.5}$	$0.4^{1.5}$	$0.4^{0.5}$
electron detection efficiency (MCP)	0.7	0.7	0.7	0.7
x-ray capture fraction	0.085	0.85	0.85	0.85
overall detection efficiency	0.0003	0.012	0.036	0.036
Processed events/y				
net events/year/source atom	0.0002	0.02	0.023	10x 0.023
processed events per 360 days active running	2.10^{4}	2.10^{6}	2.10^{9}	2.10^{10}
Event rates				
source decays per second	80	800	8.10^{4}	10x 8.10^{4}
Triggers per minute	11	1100	4.10^{5}	10x 4.10^{5}
rate of processed events	2/hour	3/min	60/s	600/s

- Trigger is coincidence between e- and x-ray.
- **K**-capture and **N** x-ray selected for high x-ray energy (better TOF resolution) and low Auger multiplicity
- Auger e- energy(TOF) spread requires~100 ns coincidence gate
- Ion TOF gate is hundreds of microseconds.

	electron captured from shell		
	K	L	M
	85%	12.5%	2.5%
x-rays from shell			
L	69.5%		
M	13.0%	10.0%	
N	2.5%	2.5%	2.5%
x-ray energy range (keV)			
L	29.46 -29.78		
M	33.56-33.63	4.32 - 4.45	
N	34.43	5.32	0.87
Auger ranges from N shell (keV)			
type NNO (68%)	0.04 – 0.08	0.04 – 0.08	
type NOO (32%)	0.10 – 0.14	0.10 – 0.14	

Table 3.1: Electron capture percentages for ^{131}Cs x-ray energies (after decay to Xe), showing percentage transitions from higher shells, and N-shell Auger energy ranges.

Backgrounds

- MOT loading from atomic beam source can be inefficient

- Also, “trapped” atoms actually escape from MOT, with mean life 10's -> 1000 seconds
- 131-Cs decay lifetime >> MOT trapping lifetime
- => most decays occur outside the MOT

However, **131–Cs decays with no penetrating radiation, to a stable daughter.**

Out–of–MOT decays satisfying trigger coincidence can be strongly suppressed.

Backgrounds, cont'd

Actual Roentdek (commercial) spectrometer stack:

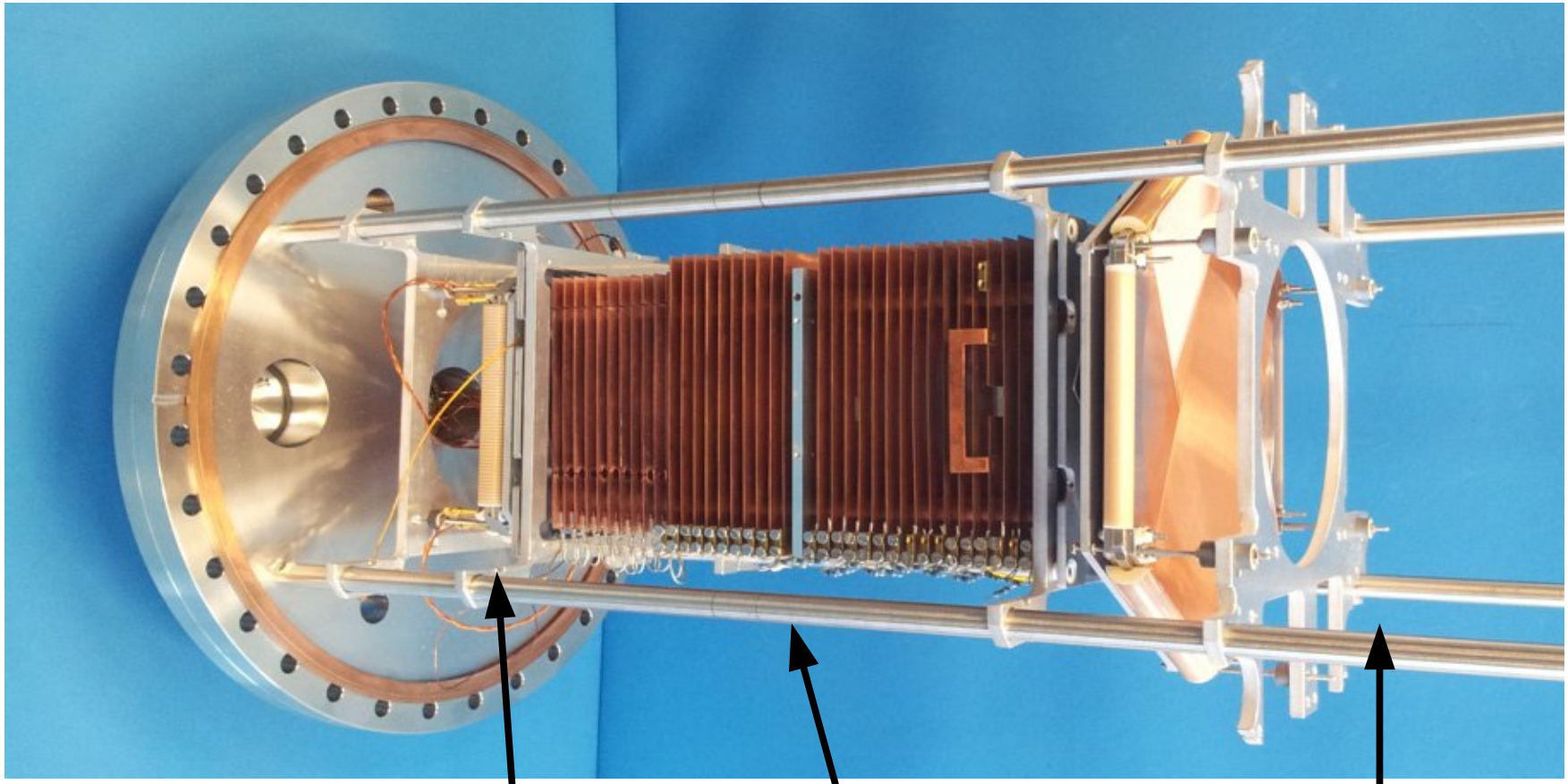

Management Plans

- Proposed schedule and budget are quite aggressive
- Two full-time staff scientist new-hires devoted to project, plus students and PI's
- Delayed start date to allow long-lead preparation (planning, hiring and procurement)
- System design is modular to allow subsystem development at separated sites

<u>Year 1:</u>
Finalize detailed designs
Procurement
Assembly & test of individual subsystems at participating institutions
DAQ and controls software for subsystems
Cs radiochemistry

<u>Year 2:</u>
Mechanical integration of subsystems at one site (UCLA)
Integration of DAQ and controls
Commissioning & calibration with stable Cs (photoionization)
Commissioning with radioactive Cs
Initial operation & calibration
Initial data taking

<u>Year 3:</u>
Further operation
System optimization (MOT operation, spectrometer & detector parameters)
Initial results