Fermilab
50 Years of Discovery

A HP TPC as part of a Hybrid Detector

Alan Bross

DUNE ND WS

9-June-2017

Hybrid Detector concept

- At the recent CM, Alfons summarized the concept for a Multi-purpose Tracker

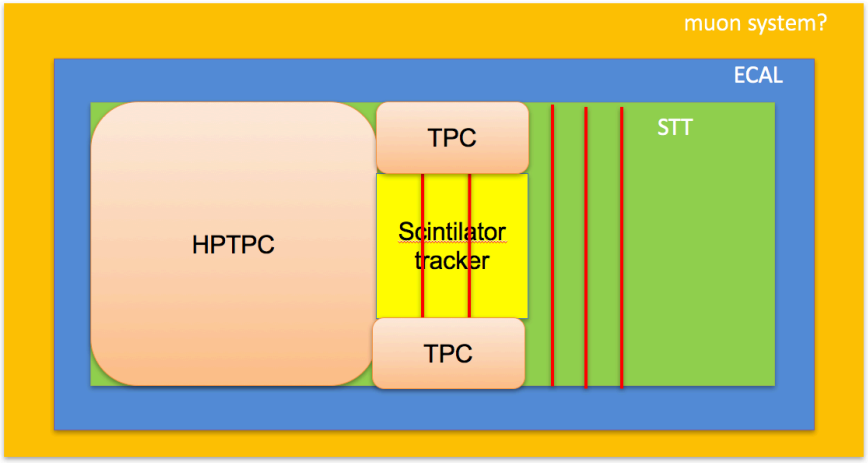

Hybrid Detector concept II

- Although this is truly multi-purpose, I fear that the whole will be less than the sum of the parts and tried to develop a more integrated approach

And in the Chimaera analogy

3 fully functional dragons

Integrated Ar system

- Following the preliminary conclusions from AW I have included in this concept
  - Non-magnetized LAr
    - But 3D – pixel readout
  - Multipurpose detector with large acceptance for muons from the LAr
    - Magnetized Tracker
    - EM calorimeter
    - Muon Tag
- Nuclear targets
  - Difficult to incorporate other than changing TPC_{hpg} gas
    - Introduces compromises otherwise
    - Better served as “stand alone” experiment?
      - 3rd Dragon

Integrated Ar system II

- 4m cube of LAr
  - Assume 2m cube fiducial volume (~11T)
    - Relatively small in order to maximize μ acceptance of TPC_{hpg}
- TPC_{hpg}
  - ~4.5 X 3.2 m with 5 m drift (~ 0.9T fiducial volume)
    - This implies a re-use of ALICE TPC readout chambers & electronics.
- TPC_{hpg} in magnetic field
  - 0.5T via superconducting solenoid
- Muon Tag
  - Steel to contain field. Although not a requirement, great benefit to operations in the hall and to any future (as of now unspecified) experiments that are co-located.
- Philosophy:
  - Measure $(\vec{p}, E, PID)$ of all interaction products
  - And do it redundantly, if possible
    - E/p vs. dE/dx or penetration depth for muons, track curvature vs. calorimetry, etc.

Integrated Ar system III

- Goal is to have two systems which are semi-independent that can individually address the key near detector measurement deliverables (D. Dwyer):
  - Rate, spectrum of inclusive ν_μ charged-current interactions for near/far comp.
    - Provide combined constraint on (flux X cross-section) relevant for oscillation measurement
  - Spectrum of low-ν (low hadronic energy) ν_μ charged-current interactions
    - Provide independent constraint on ν_μ energy spectrum (i.e. flux shape) at near site (~few %)
  - Rate, spectrum of inclusive ν_μ-CC in magnetized low-density tracker
    - Provide independent measurement of (flux cross-section) via different technique
  - Rate of ν-electron elastic scattering interactions
    - Provide independent constraint on absolute flux normalization
- Each system can address all of the above, each has strengths
  - Redundancy

Integrated Ar system: Parametric model

- Magnet (0.5T)
- LAr
- TPC_{hpg}
- EM Cal ($20X_o$)
- Steel ($4\lambda_o$)

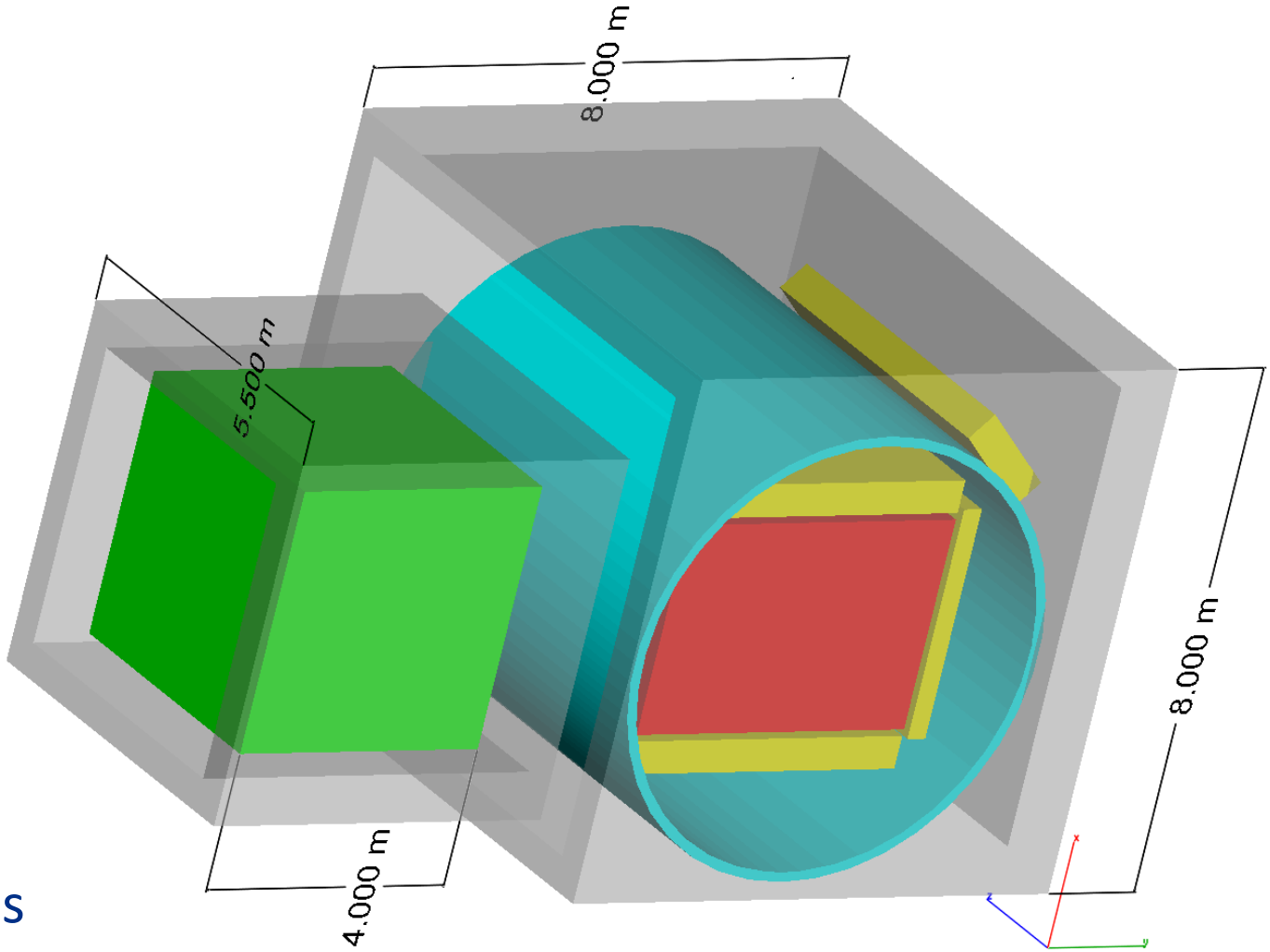

LAr:
with 2 X 2 m FV
~ 7 X_o annulus
~ 1.25 λ_o annulus

Magnet is this model is 6.5m diameter and 7 m long
Maximize acceptance for μ from LAr

Now I will focus on the TPC_{hpg}

TPC_{hpg} strengths

- *The lower density of gaseous argon (85 times less dense, for 10 bar pressure) results in;*
  - *less multiple scattering and hence better momentum resolution*
    - dE/dx resolution superb –excellent particle ID
  - *lower detection thresholds and thus higher sensitivity to soft hadrons produced in neutrino interactions*
    - Vertex visualization & its impact on event E reconstruction
  - *Event pile up not an issue*
  - Does not require any detector R&D
    - Now over 40 years of operation in large-scale experiments, culminating in some of the most powerful detectors on the planet
- From my point-of-view, the first TPC (PEP4) could deliver on the physics (event reconstruction, energy resolution, particle ID, etc.)
  - Available, but bit small for our current needs.

TPC concept

- ALICE will upgrade their TPC during the LHC long shutdown II (beginning summer 2018). 5m diameter X 5 m long (~88m^3 with hole)
  - The readout chambers and front-end electronics will be replaced and might be available for reuse

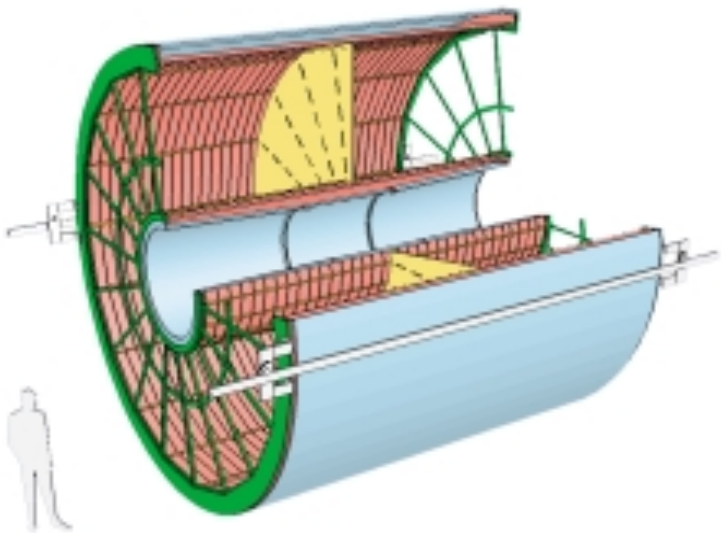

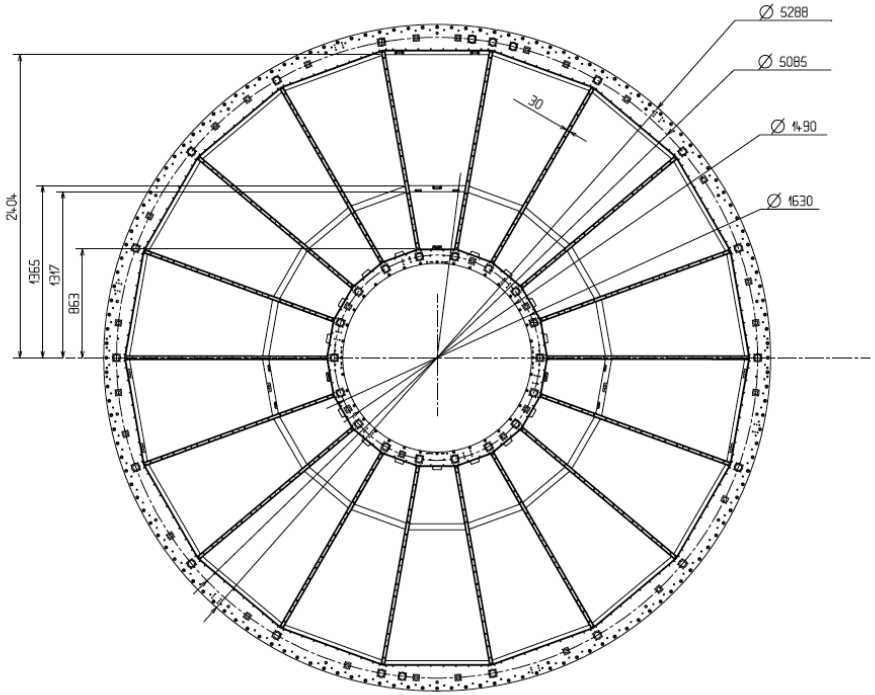

TPC concept II

- Adjacent trapezoidal readout chambers (inner (IROC) and outer (OROC) can be rotated by 180° to form rectangular parallelogram.
- Use of all ALICE chambers could instrument an area roughly 4.5m X 3.2m. With a 2.5m drift in each direction from central HV plane, as in ALICE, would yield ~ 72 m^3 or ~ 1.3T at 10 ATM.

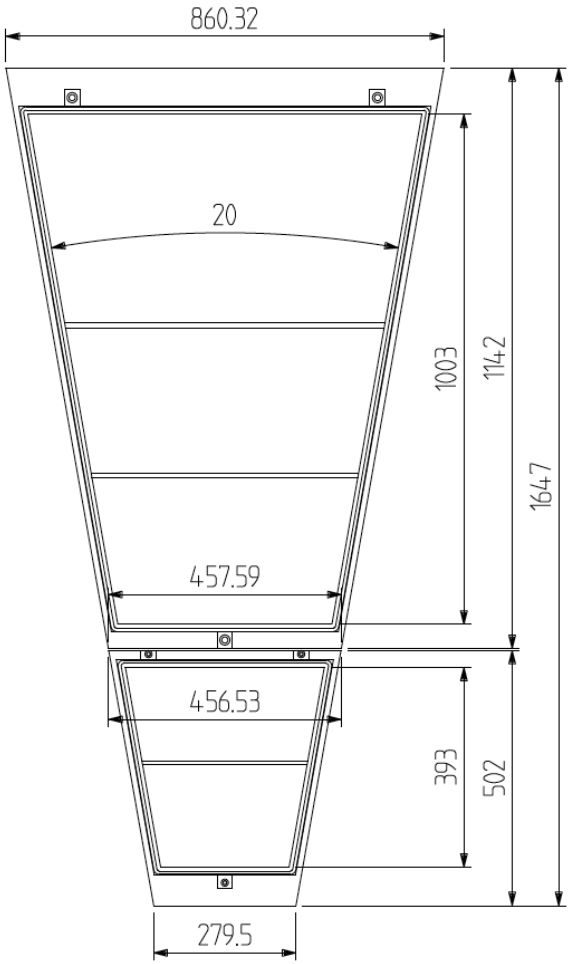

Geometry

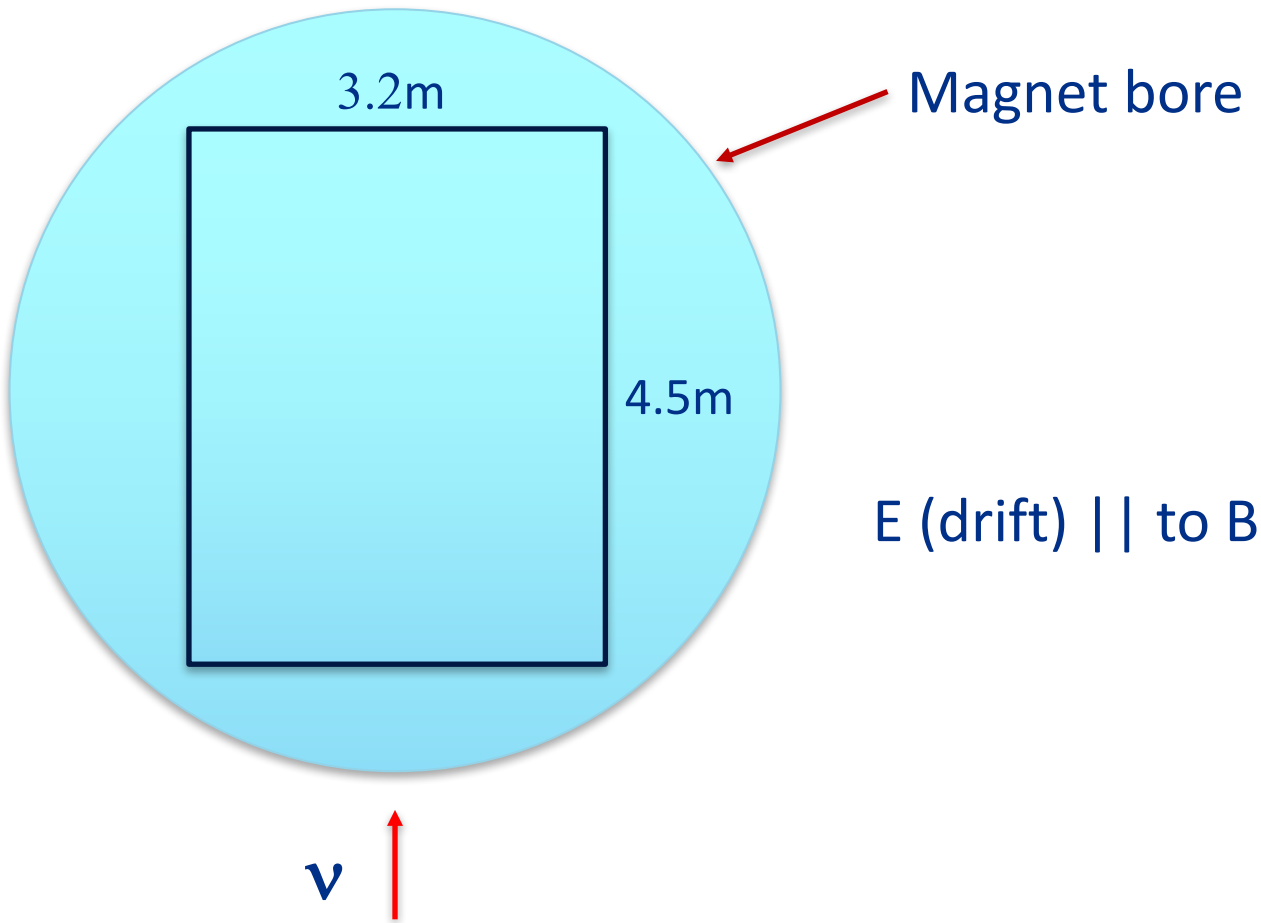

TPC performance

- Although PEP4 was a high-pressure device, most gas TPCs since then have operated at ~ 1ATM
- dE/dx resolution

Param./ Experiment	PEP4	ALEPH	DELPHI	STAR	OPAL	EPI	ISIS2
Nmax	183	340	192	45	120	128	320
D [cm]	0.4	0.4	0.4	13x11.5	1.3	6	1.6
				32x19.5			
p [atm]	8.5	1	1	1	4	1	1
L [cm]	73	136	78	77	160	768	512
Best σ(I) meas.	2.7	4.4	5.7	7.4	3.1	2.55	3.1
Ideal resol., Nmax	2.5	3.8	4.9	6	2.7	2.5	2.5
N = 0.7 Nmax		4.4	5.8	7.1	3.1		2.9

From: H.J. Hilke, CERN-PH-EP-2010-047

ALICE dE/dx performance II: MC

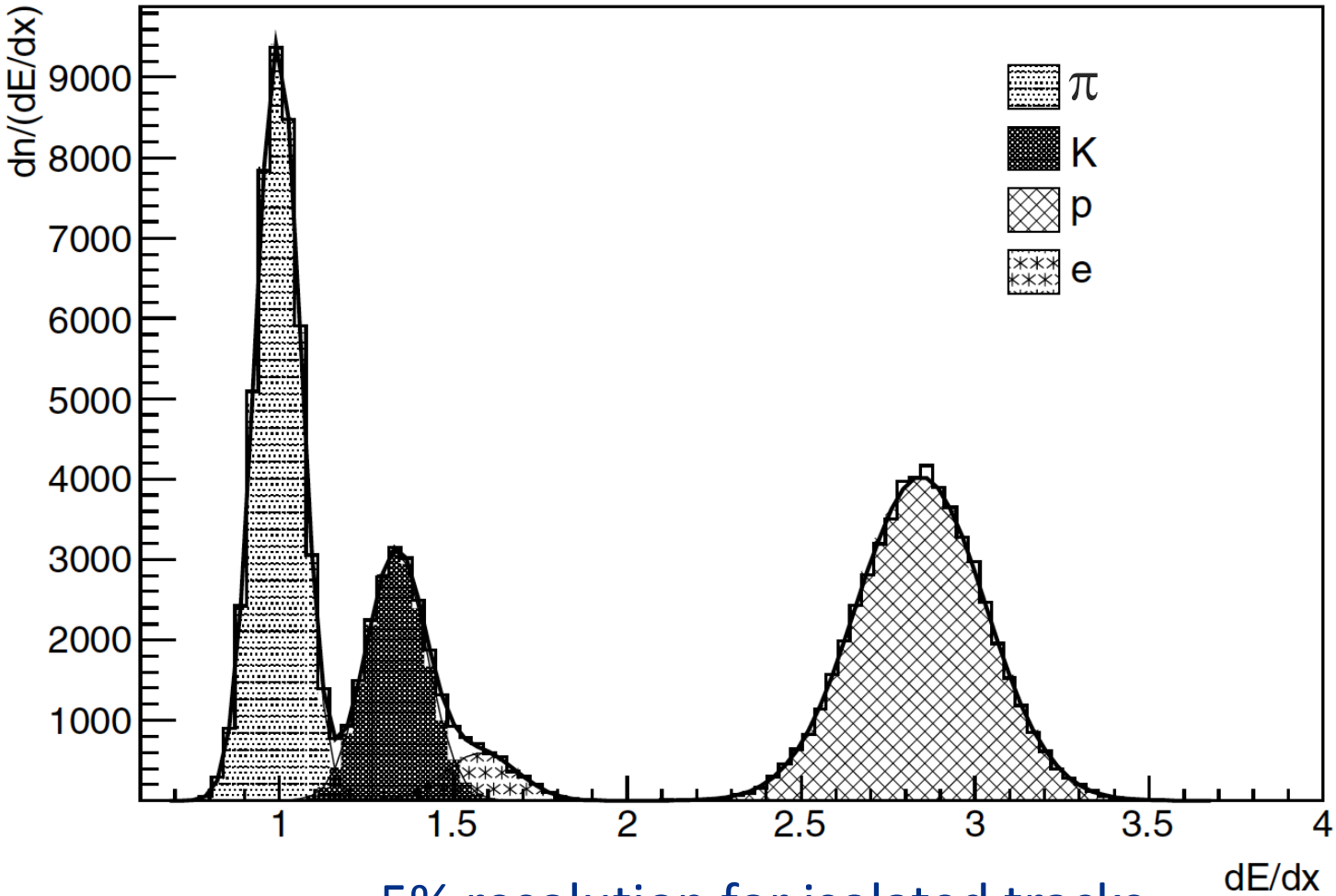

5% resolution for isolated tracks

ALICE dE/dx performance: Data

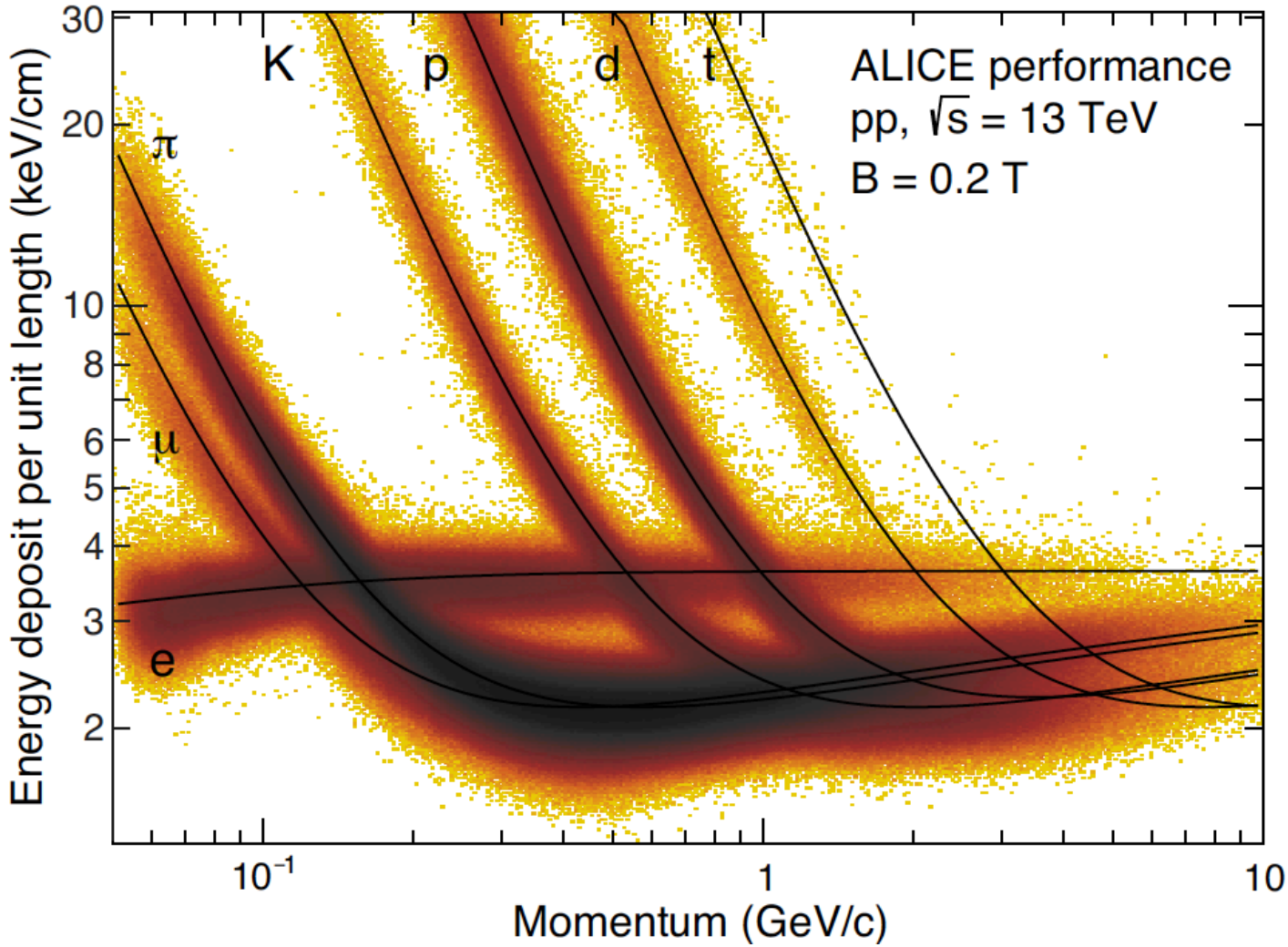

dE/dx in LAr: ArgoNeut

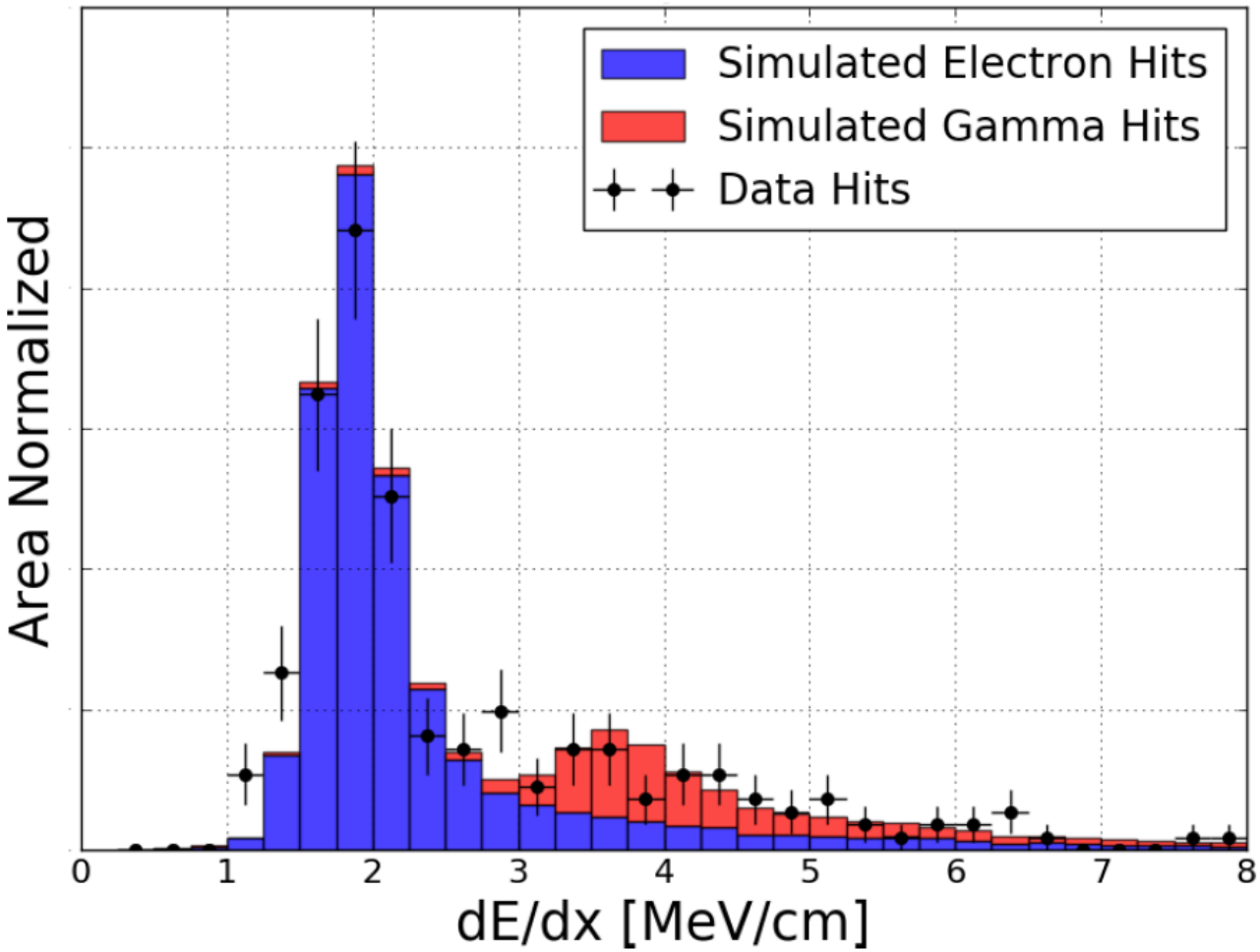

arXiv:1610.04102v2 [hep-ex] 15 Mar 2017

ALICE TPC performance: Pattern recognition

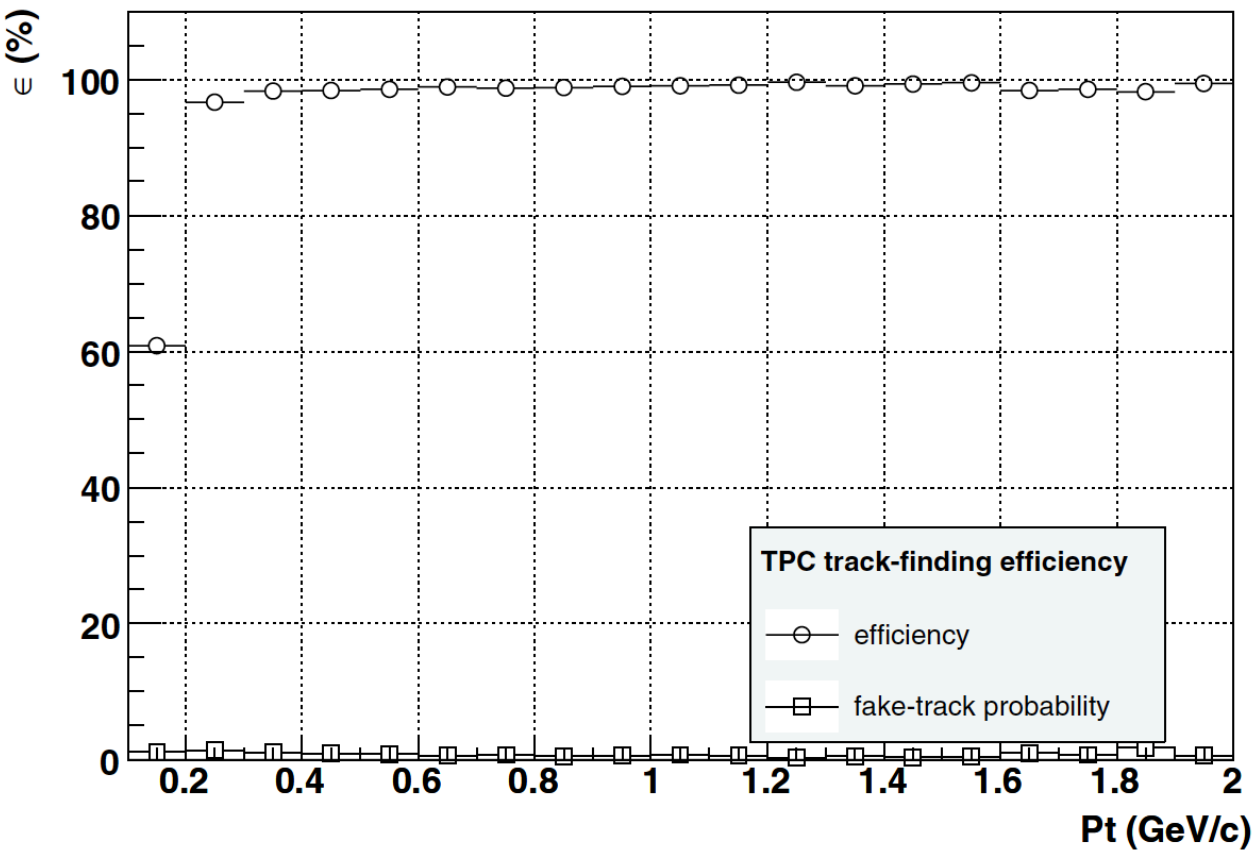

Figure 5.12. Efficiency of the TPC track-finding software as a function of particle transverse momentum for central Pb–Pb collisions ($dN_{ch}/d\eta = 6000$).

ALICE TPC performance: Momentum resolution

dN_{ch}/dy	$\Delta p_t/p_t$ [%] averaged	$\Delta p_t/p_t$ [%] $p_t = 5$ GeV/c
1300	1.6	5.1
4300	2.0	7.6
8300	2.1	8.5

- 10 ATM operation
  - More MCS
- But,
  - Slightly higher field
  - Much lower multiplicity

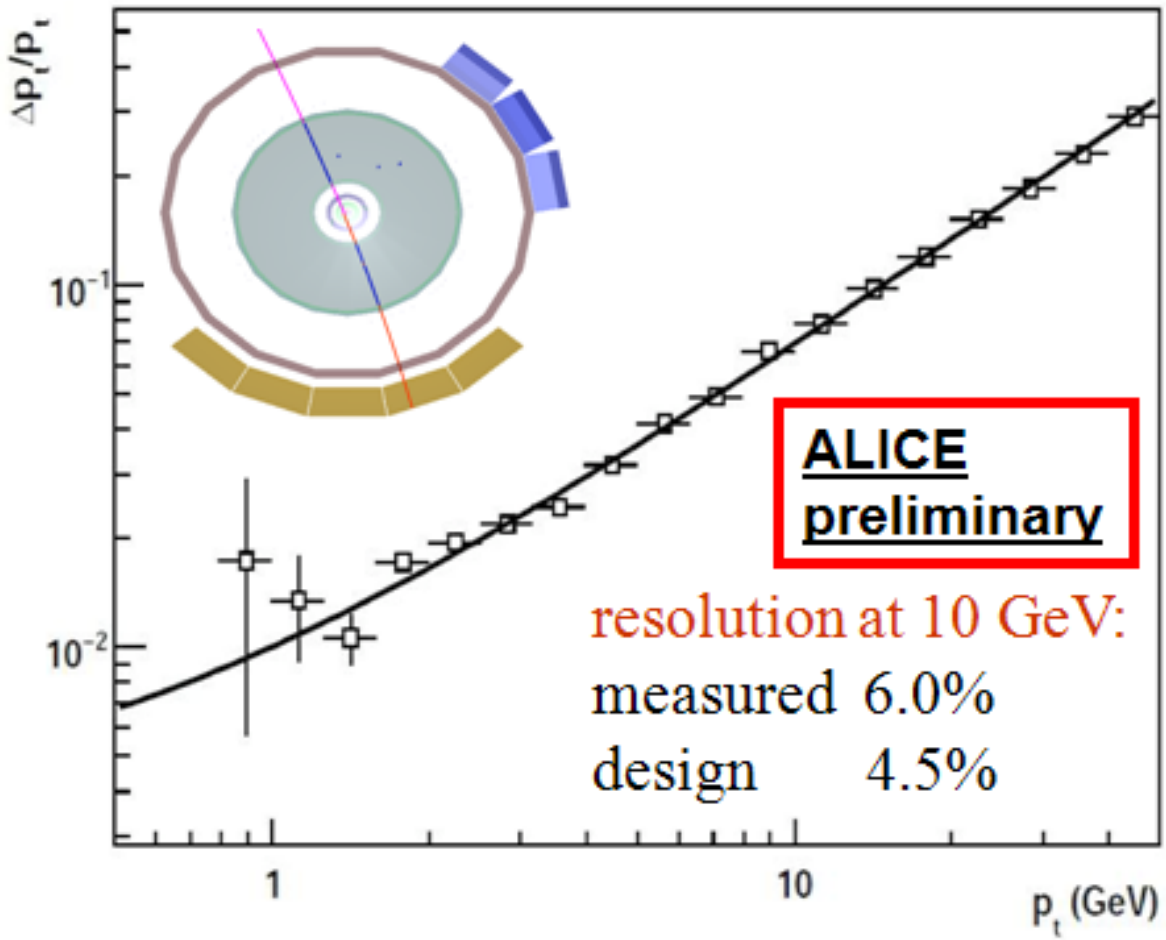

1-2% P_μ resolution in P band of interest

Vertex visualization in TPC_{HPGas} : Low-density totally active detector

- Better understanding of proton distributions could add to understanding of nuclear effects.
- Could possibly help with understanding neutron production also, but
  - Model input needed
  - Need neutrino and anti-neutrino data
  - And other target nucleus
    - Ne, CO_2, but
  - Probably requires the 3rd Dragon

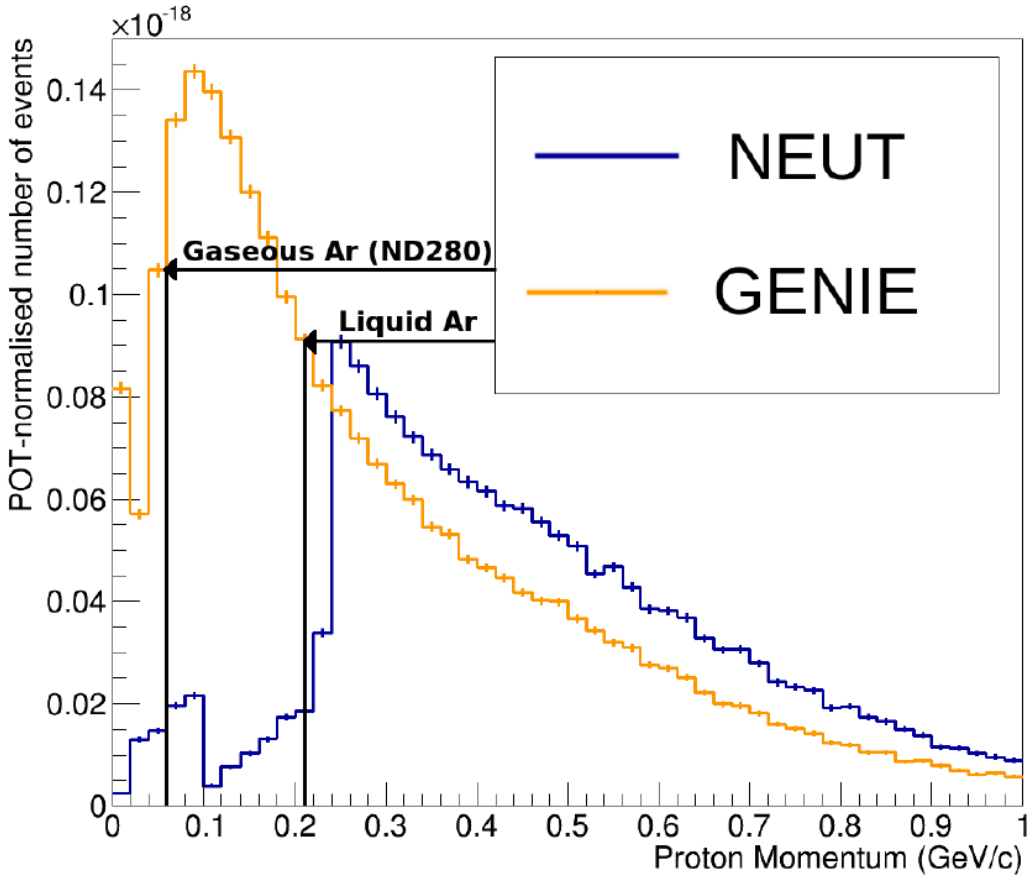

Plots showing the predictions from NEUT and GENIE of protons leaving Ar for CC evts (T2K). Cut-offs for LAr and Ar indicated and show how the extra sensitivity of a gas detector covers the region of maximum tension between the two generators. (**Pip Hamilton's PhD Thesis**)

50 MeV protons: 10ATM Ar vs. Lar (100 evts)

MARS

GAS

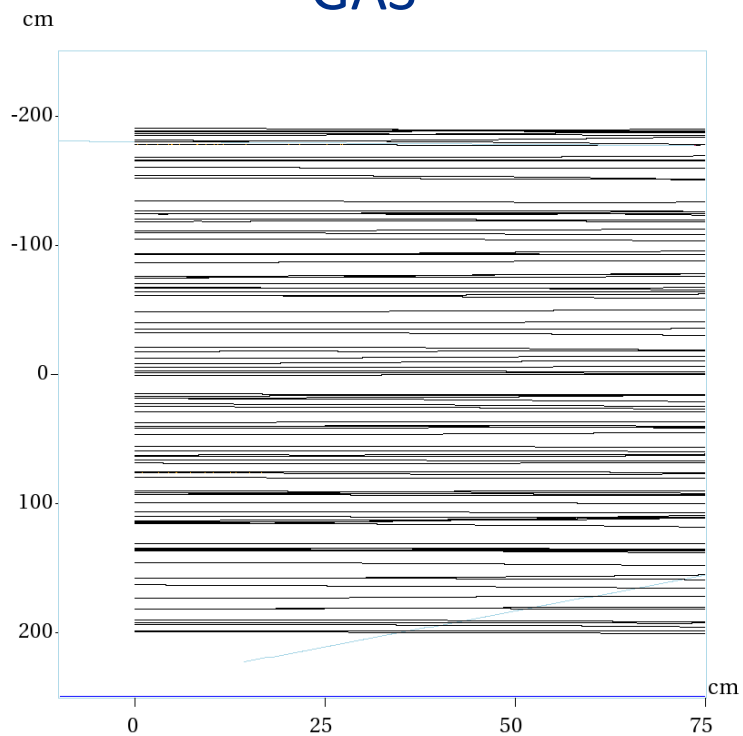

LAr

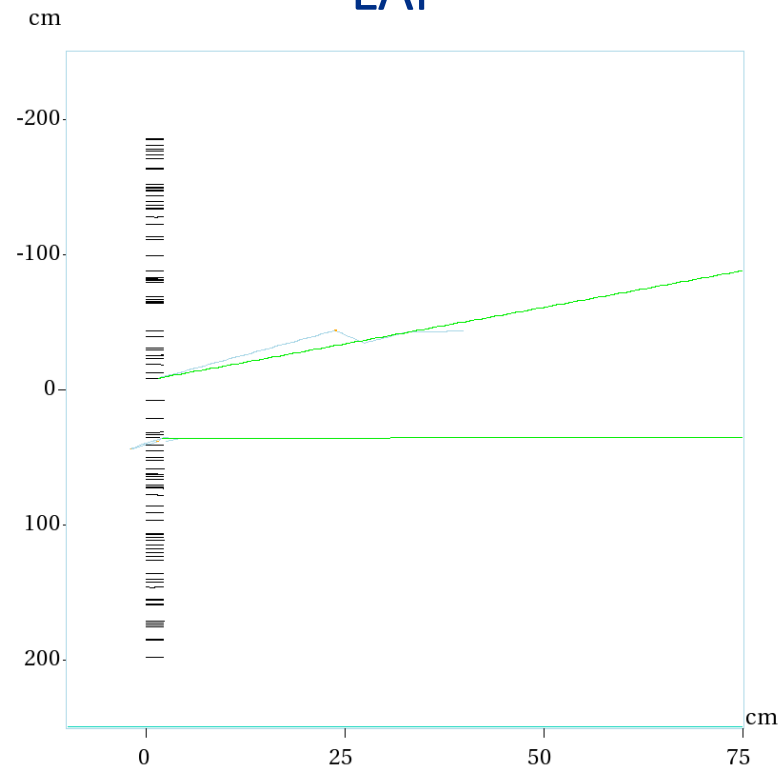

B=0 here, but MCS is on.
r ~ 33 cm for B=.5T
Range ~ 180 cm
50 MeV cut-off from previous can be lowered

TPC_{hpg} event containment

- Neutral energy (γ, n) will not be fully contained within the TPC_{hpg} volume.
  - EM calorimetry
- Neither will charged leptons and hadrons to some degree, however
  - With PID and momentum analysis, Energy flow analysis can likely reconstruct E with excellent precision

Magnetization

- In PEP4, the magnet cryostat was the pressure vessel
  - & was only 0.5 X_0 thick
- Details on magnet design options tomorrow

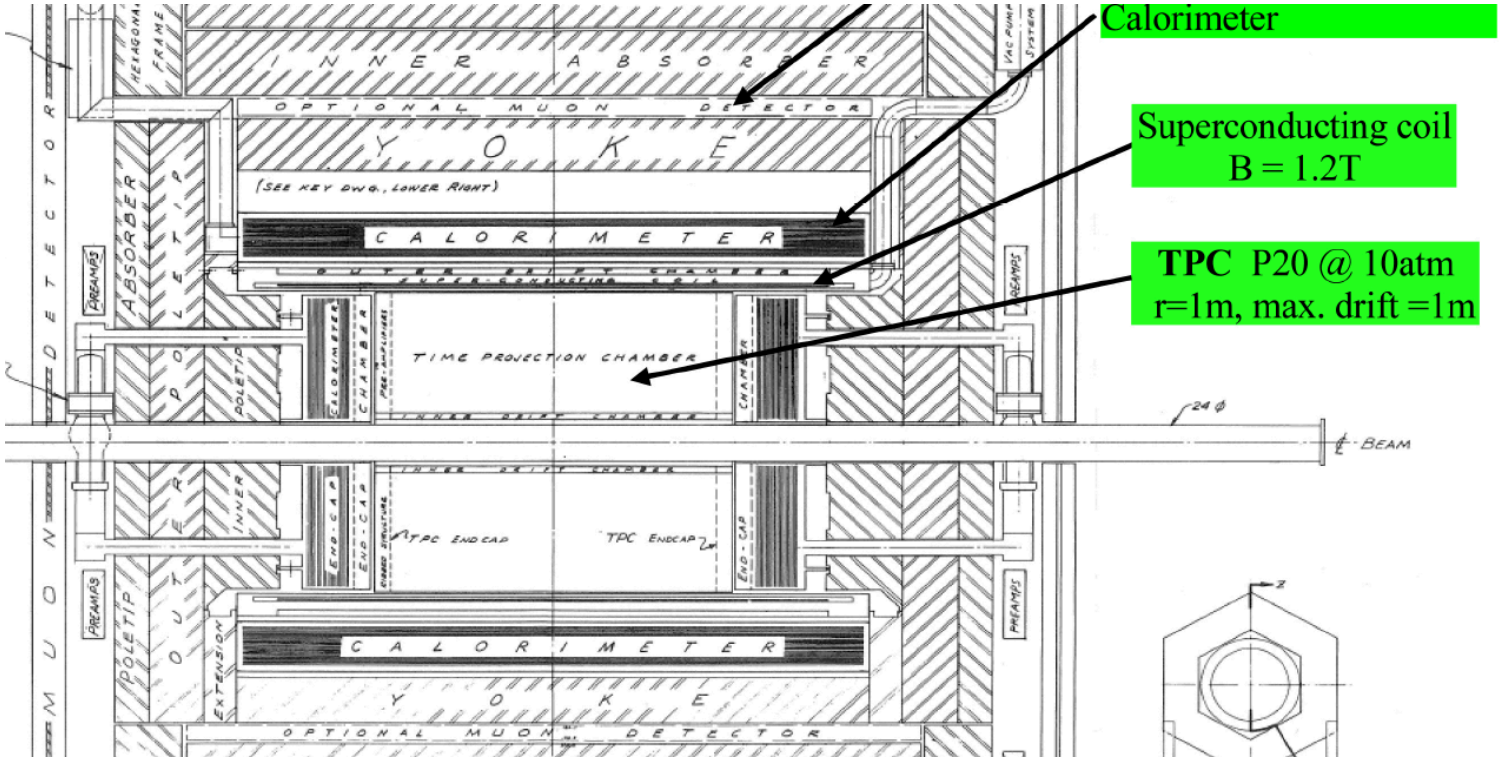

Magnetization: Return Yoke

- Goal:
  - Contain all the field

Vladimir Kashikhin

Model

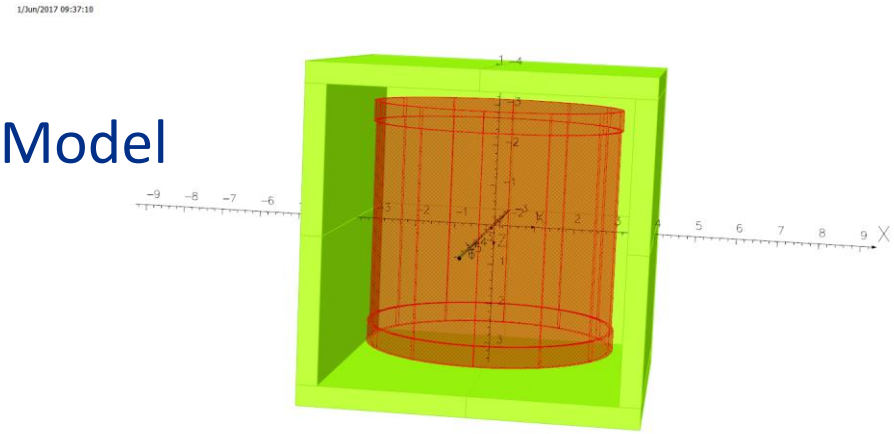

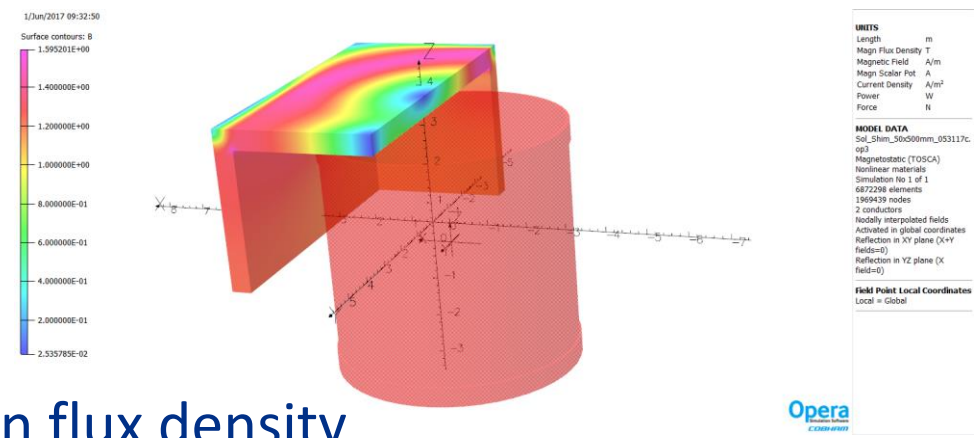

Iron flux density

- Steel is not saturated
- All flux contained
  - Met goal & then some
  - Reduce amount of steel
- Field uniformity -0.4 + 2.0% (from missing one side of the box)
  - E X B corrections will need to be made
    - NA49/61 successfully dealt with 60% non-uniformity
    - MIPP did not do as well.

Return Yoke and backgrounds

- Concerns have been raised about backgrounds from ν interactions in the steel.
  - Muons: easily rejected
  - What about photons?
  - γ conversions in TPC_{HPGas} and LAr very different

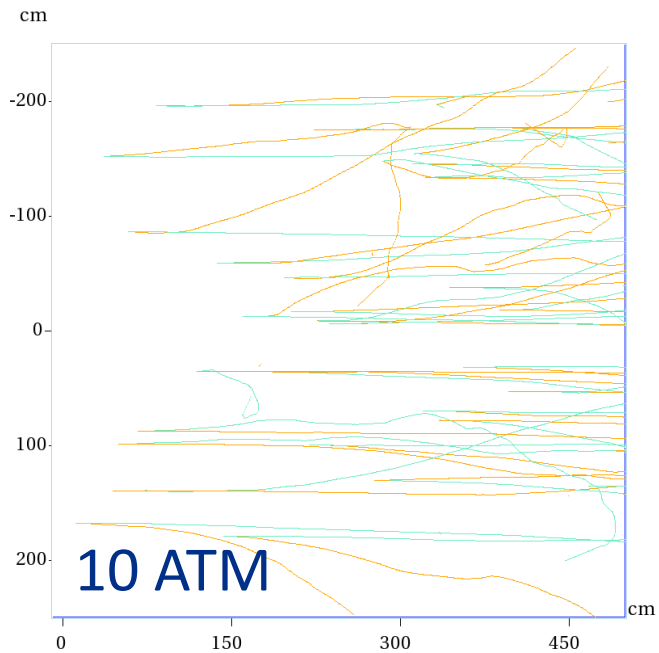

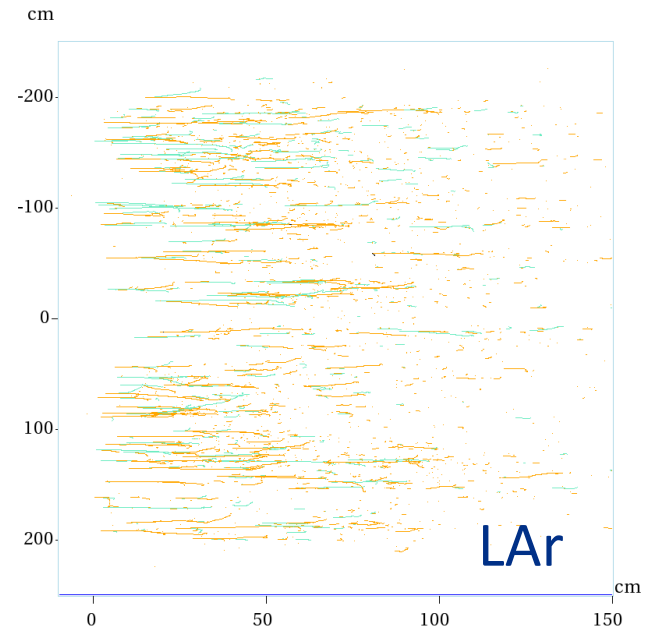

Conclusions

- An integrated near detector system for DUNE utilizing a LAr + a magnetized TPC_{hpg} looks promising
  - LAr: R&D required, but natural evolution of the technology
  - TPC_{hpg}: Well established and robust with unmatched performance
- Utilization of ALICE readout chambers and front-end electronics might present a significant cost savings.
  - Approaches 1T fiducial mass
  - Can reproduce exquisite ALICE TPC performance
    - δ/p, dE/dx, pattern recognition, etc.
    - Offers tremendous background rejection capability
- EM calorimetry needs to be specified…
- neutron detection?
- Muon tag integrated with return Fe
  - Minimize/eliminates stray field

Conclusions II

- LAr + magnetized TPC_{hpg} fulfills detector goals as outlined at the recent CM
  - Nuclear targets limited to alternate gas fills, however.
- Both systems have capability to run at high rate (LAr needs vetting)
  - These detectors can very likely be effective at any of the near detector hall base line distances currently being discussed
    - Although given Mark's comments (Tom Hamernik's analysis) this morning, overall cost optimization analysis is even more complicated
- To test/optimize the design a limited challenge test is needed
  - Some subset (simplification) of the scheme that Mike described this morning.
- Then cost optimization
  - Usually means: Cheaper

END

THANK YOU

BACK UPS

First step – get the required Luminosity – Target Mass

- I am assuming a 1T fiducial mass and a position at ND360
  - Assume detector can take the rate and that the hall cost is a wash (ND570 vs. ND360).
- 3 years ν running
  - νe elastic scattering 10^3 evts.
  - Inverse muon decay 10^3 (overestimate with latest beam?)
  - Total CC 10^7
- This does not take into account reconstruction efficiencies, etc.
  - Note: I used "DUNE optimized" flux
    - 2 horn
- Although ND requirements are still being developed, I think that these numbers will turn out to be sufficient.