Upgrade of the ATLAS Hadronic Tile Calorimeter for the High Luminosity LHC

Kevin Hildebrand
University of Chicago
On behalf of the ATLAS TileCal Community

Introduction

- The ATLAS detector is a multi-purpose detector at the Large Hadron Collider (LHC) at CERN.
- The Tile Calorimeter (TileCal) is a hadronic calorimeter that covers the central region of ATLAS.
- It consists of a central barrel and two extended barrels, each made up of 64 modules, each covering the azimuthal angle,φ, 2π/64 ~ .1

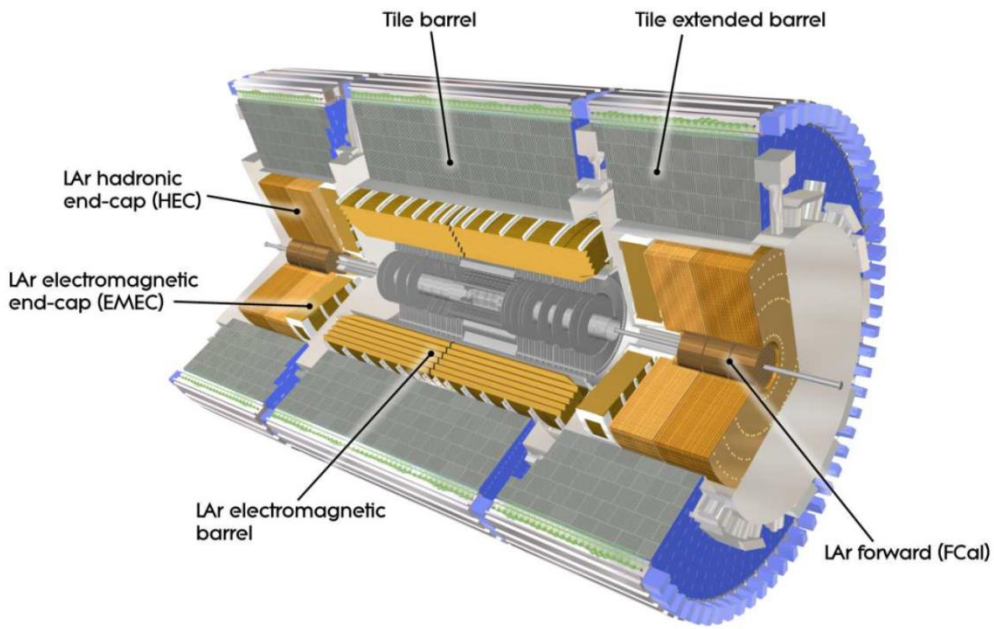

Introduction

- Modules are made of alternating layers of iron plates and scintillating tiles
- The modules are divided up into cells
- The energy deposited in each cell is readout by 2 photomultiplier tubes (PMTs)
- Drawers containing the Front-End electronics and PMTs are inserted in the outermost part of the module

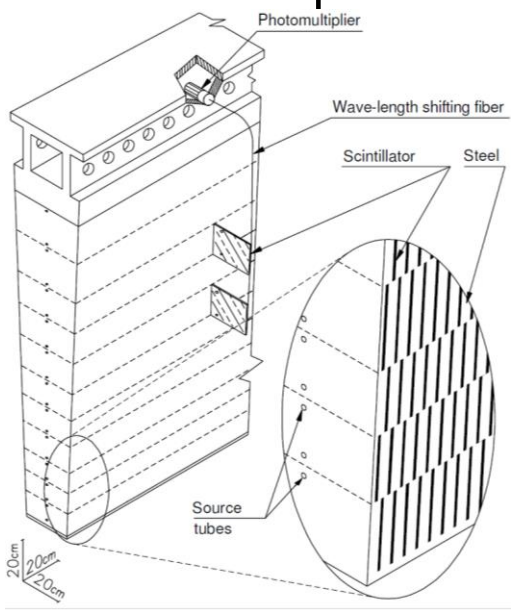

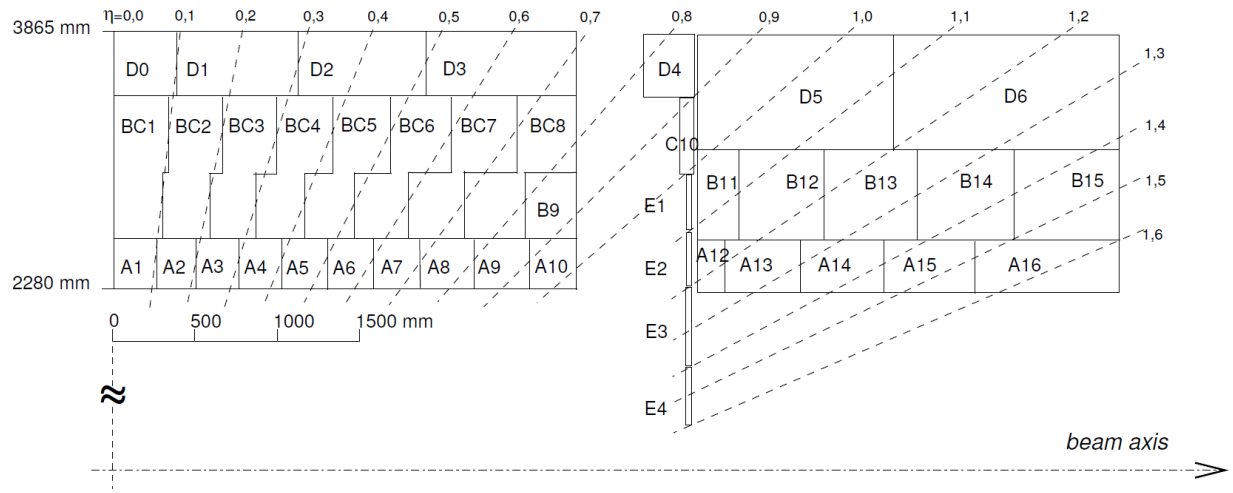

Half a Central Barrel Extended Barrel

Current System in ATLAS

- Signals from the PMTs are shaped and amplified in two gains with relative ratio 1:64 by so-called 3-in-1 cards
- Each signal is then digitized at 40 MHz using 10-bit ADCs and stored in the front-end pipeline memory
- A low-granularity analog sum is sent to the level 1 trigger
- Upon arrival of a trigger, the signal is sent to the back-end electronics where energy and time are reconstructed

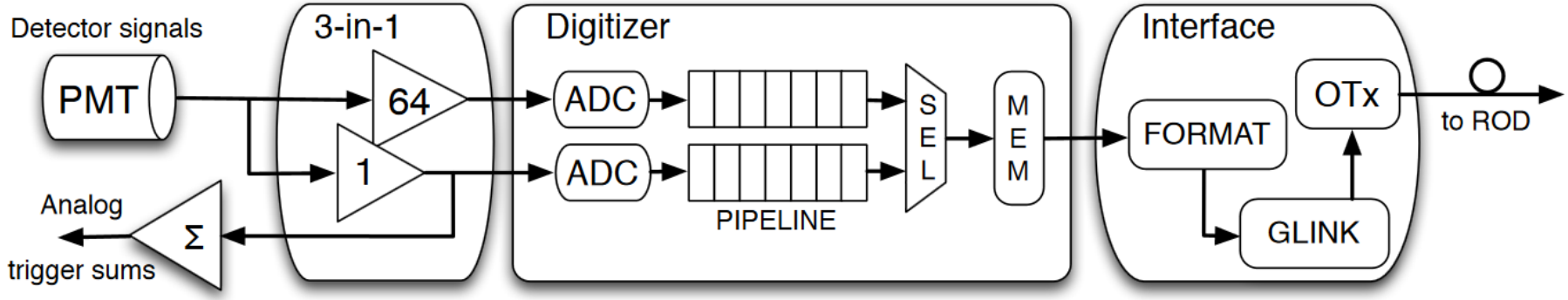

Current System in ATLAS

- Low voltage for a drawer is supplied by a single Low Voltage Power Supply (LVPS)
- High Voltage (HV) for the PMTs is supplied to each drawer by a single cable
- HV Opto boards located in the drawer are responsible for regulating and monitoring the HV for each individual PMT

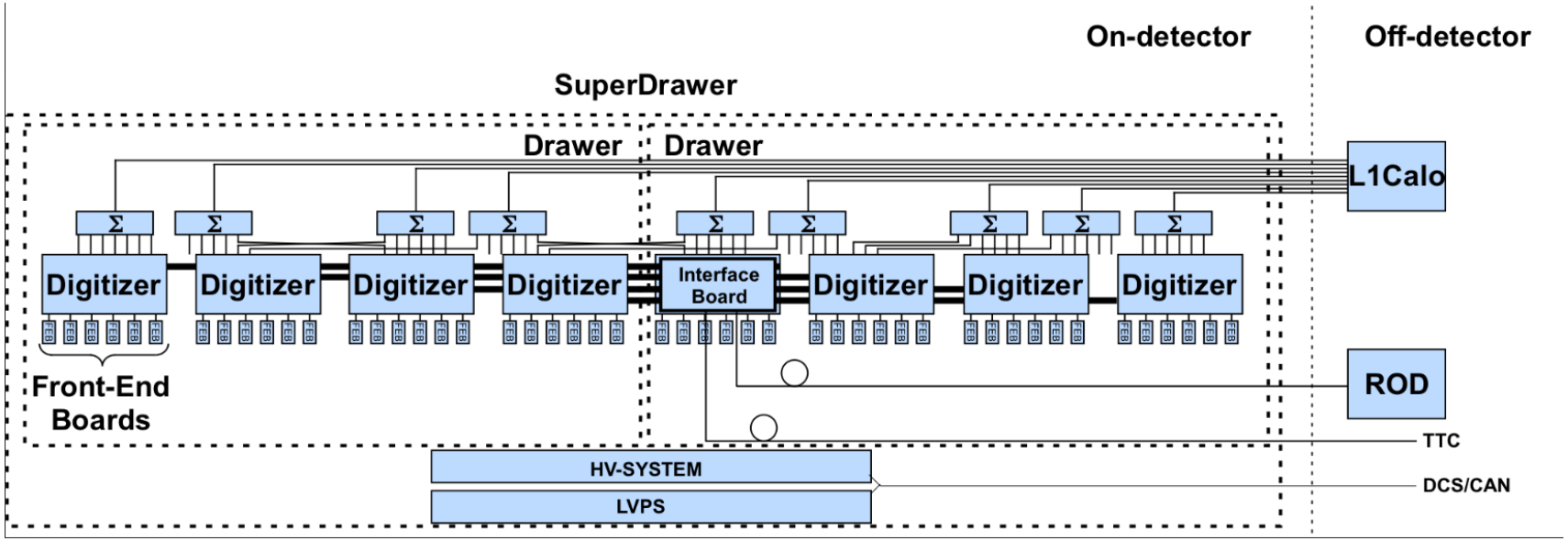

High Luminosity LHC

- The LHC will undergo a series of upgrades towards a High Luminosity LHC (HL-LHC) that will deliver five times the LHC nominal instantaneous luminosity
- The ATLAS Phase II upgrade, in 2024, will accommodate the upgrade of the detector and data acquisition system for the HL-LHC
- TileCal detector components (steel absorbers, scintillating tiles, and fibers) will not be replaced
- TileCal on- and off-detector electronics must be replaced to meet new trigger requirements and improve reliability

The Upgrade Design

- Three separate front-end designs were proposed, built, and tested at test beams.
- The upgraded 3-in-1, similar to the current design, was selected for the upgrade.
- Each drawer is made up of four independent mini-drawers
- A mini-drawer consists of a main board, daughter board, and twelve 3-in-1 cards

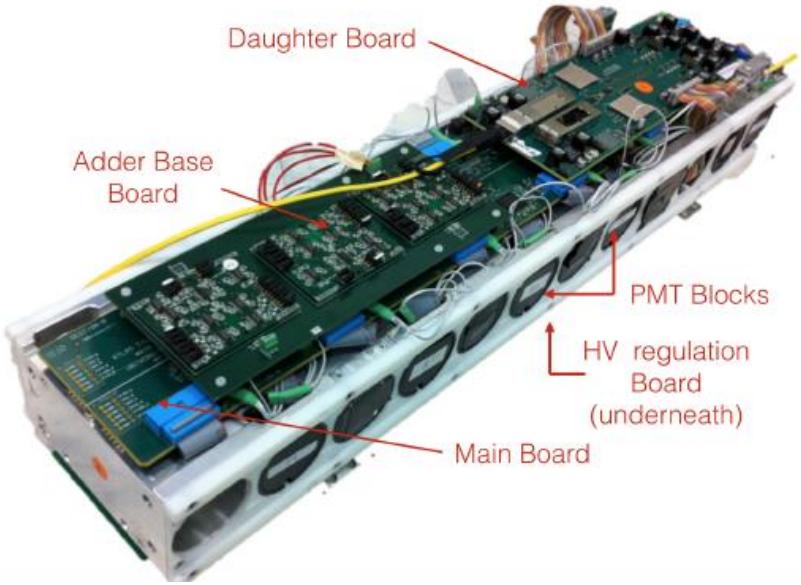

The Upgrade Design

- The 3-in-1 card shapes and amplifies the signals from the PMTs, which are then digitized at 40 MHz using 12-bit ADCs
- The full digital signals from all channels will be sent to the trigger
- Each mini-drawer has two LVPSs which supply LV to each side
- If one side's LVPS fails the other is capable of supplying LV to both sides of the mini-drawer.

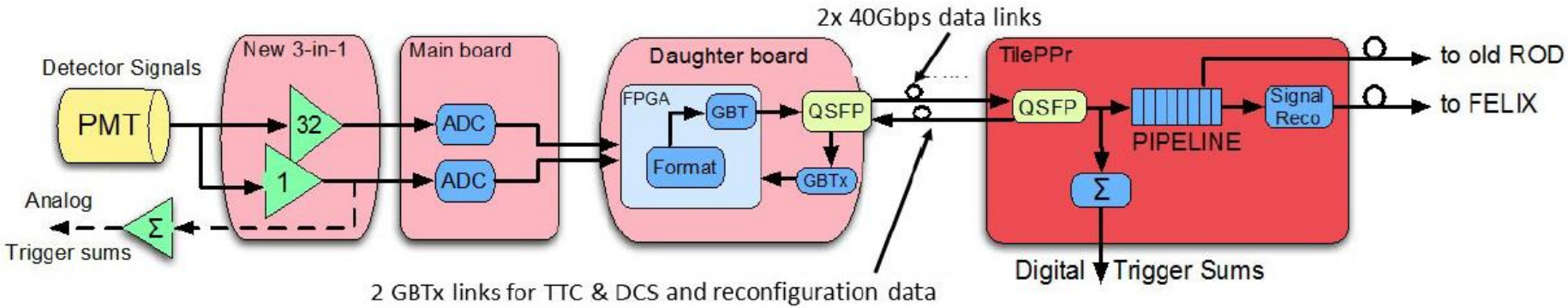

The Upgrade Design

- Two HV options were considered
- The one selected is the remote HV option in which the HV is supplied to each PMT separately from off the detector
- The other option was the HV opto boards which is what is being used in the current system

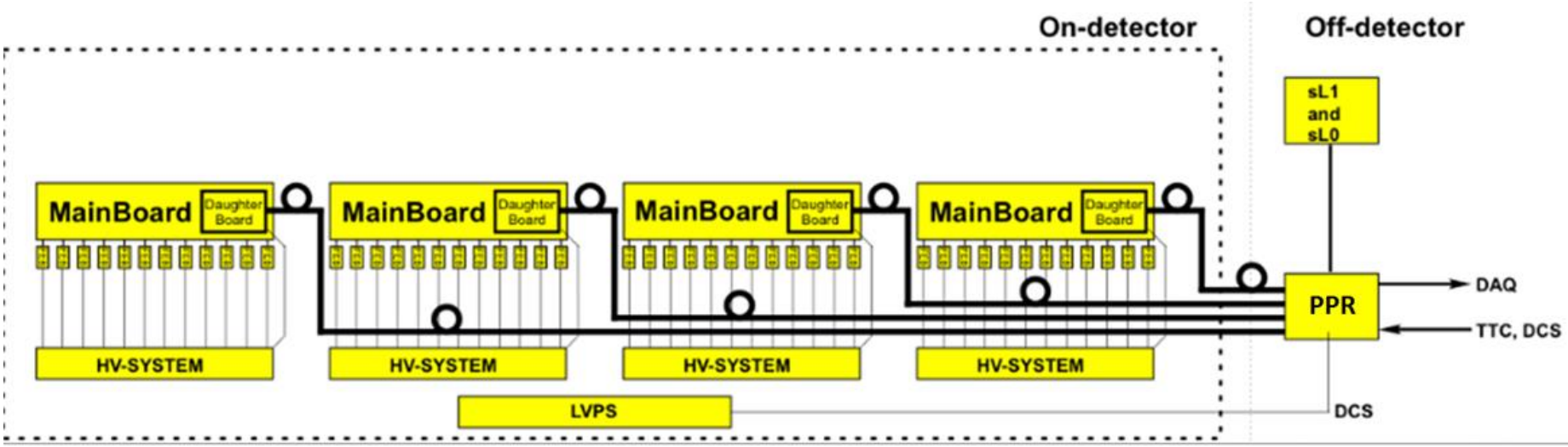

Demonstrator Test Beam Results

- To test the upgraded 3-in-1 design a demonstrator drawer was built
- The Demonstrator is a hybrid drawer of the upgraded 3-in-1 design that is also compatible with the current system in ATLAS.
- The Demonstrator could be inserted in the current system during one of the short LHC shutdowns during Run 2.
- It has been tested in five separate test beams

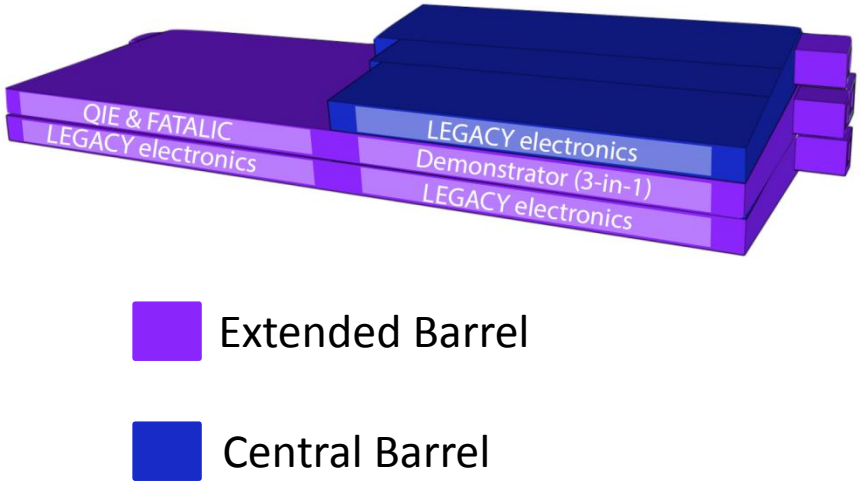

Demonstrator Test Beam Results

- During test beams, data was collected using muon, electron, and hadron beams
- The Demonstrator shows good separation between pedestal events and muon signal

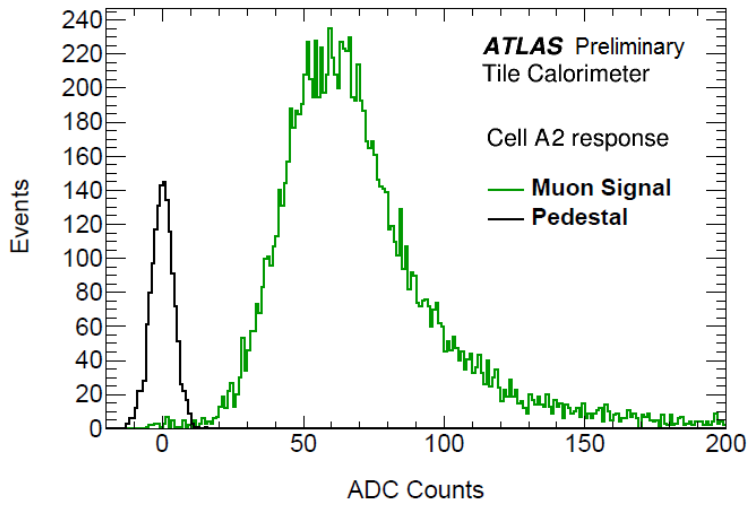

Energy in a Single Cell with Muon Beam

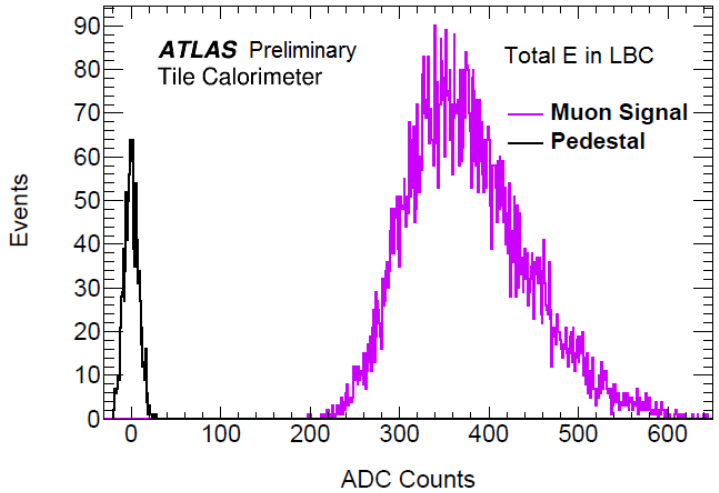

Total Energy in Demonstrator with Muon Beam

Demonstrator Test Beam Results

- The Demonstrator along with the two legacy drawers it was inserted between were used to identify different particles in the beam (electron beams were not very pure)

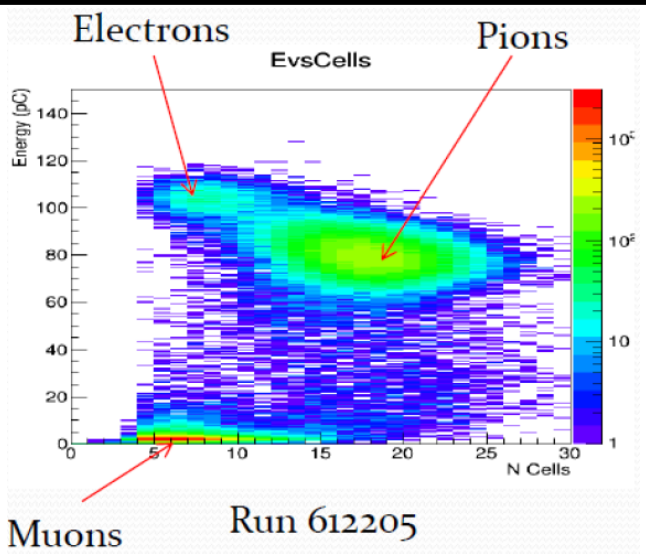

Scatter plot of energy versus number of cells over threshold, used to identify electrons in the test beam

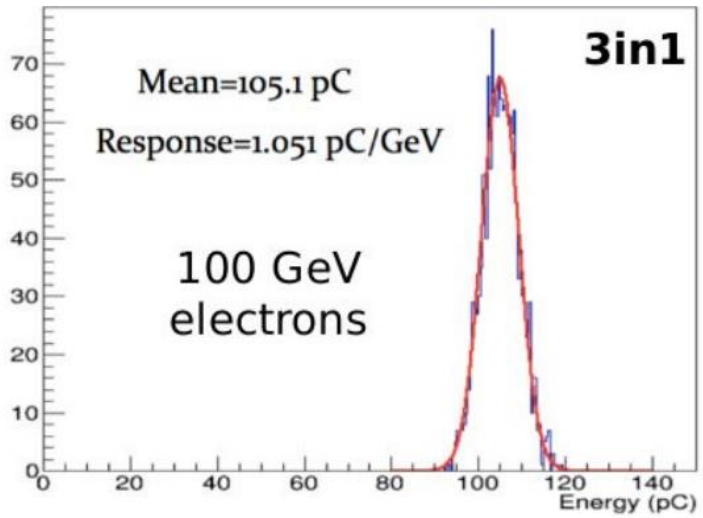

Energy distribution for 100 GeV electrons after applying cuts to isolate electrons

Final Remarks

- The design, building, and testing of the upgrade design is the result of the collaboration of many institutions.
- Analysis of data taken during test beams is still on going
- A task force will be put together to assess the readiness and pros and cons of the Demonstrator insertion into ATLAS

Backup Slides