High Power Beam Dump Drum for FRIB Primary Beam: Challenges and Solutions

Frederique Pellemoine

Facility for Rare Isotope Beams, MSU

This material is based upon work supported by the U.S. Department of Energy Office of Science under Cooperative Agreement DE-SC0000661, the State of Michigan and Michigan State University. Michigan State University designs and establishes FRIB as a DOE Office of Science National User Facility in support of the mission of the Office of Nuclear Physics.

Outline

- FRIB High Power Beam Dump Concept
- Beam Dump Simulations
  - Thermo-mechanical Simulations in Support of the Beam Dump Design
  - Fluid Flow Simulations
- Material and Mechanical Studies
- Engineering Challenges
- Beam Dump Delivery
- Acknowledgements

Facility for Rare Isotope Beams

- Rare isotope production with primary beams up to 400 kW, at 200 MeV/u for 238U (>200 MeV/u for lighter ions)

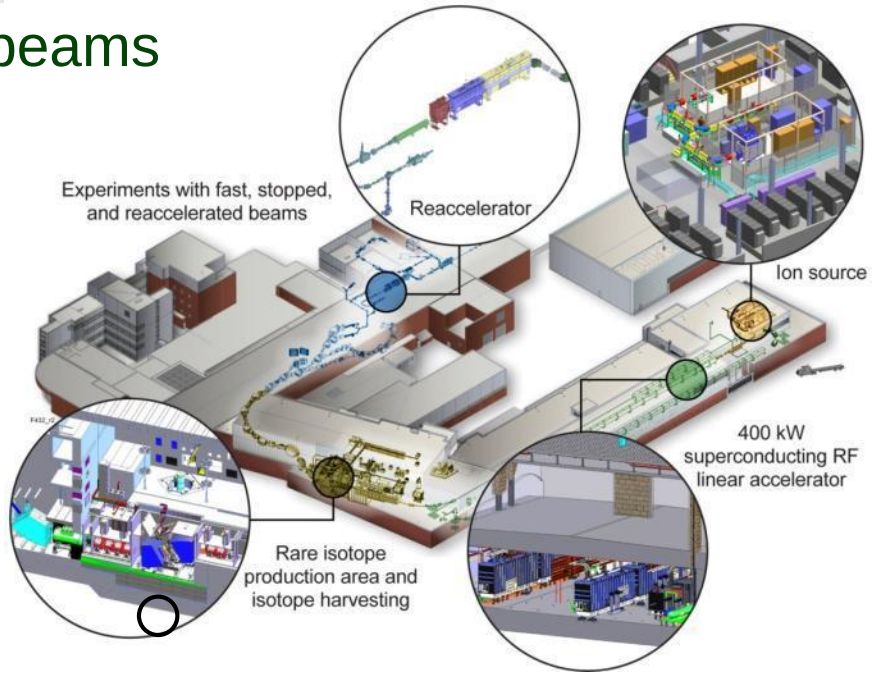

Challenging Equipment in Experimental System Area

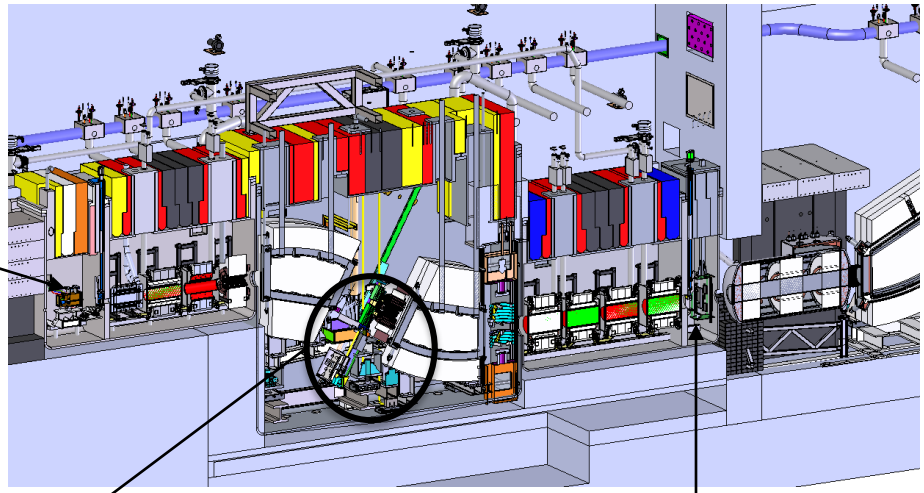

Production target (graphite)

E = 202 – 260 MeV/u
P_{beam} = 400 kW
$P_{deposited}$ ~ 100 kW
$\sigma_{x\ beam}$ = 0.24 mm
$\sigma_{y\ beam}$ = 0.29 mm
P = 60 MW/cm³
Dose ~ 8 dpa

INTDS-2010
INTDS-2012
INTDS-2014

Beam dump drum (Ti-alloy)

E = 156 – 260 MeV/u
$P_{deposited}$ ~ 300 kW
$\sigma_{x\ beam}$ = 1-10 mm
$\sigma_{y\ beam}$ = 2-50 mm
P = 30 MW/cm³
Dose ~ 7 dpa

INTDS-2018

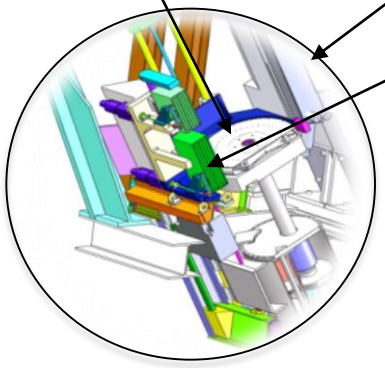

Fragment catcher (Al-alloy)

E = 156 – 260 MeV/u
$P_{deposited}$ < 10 kW
$\sigma_{x\ beam}$ = up to 15 cm
$\sigma_{y\ beam}$ = up to 5 cm
P = 9 kW/cm³
Dose ~ 2.5 dpa

Wedge (Al-alloy)

E = 156 – 260 MeV/u
$P_{deposited}$ < 2 kW
$\sigma_{x\ beam}$ = up to 5 cm
$\sigma_{y\ beam}$ = up to 5 cm
P = 13 kW/cm³
Dose ~ 1 dpa

FRIB Primary Beam Dump
Water-filled Rotating Drum

- Stop the unreacted primary beam
  - Heavy ion beams (Oxygen to uranium)
  - Energies >150 MeV/u
- Beam dump requirements
  - High power capability up to 325 kW
  - 1 year (5500 h) lifetime desirable
  - Remote replacement and maintenance

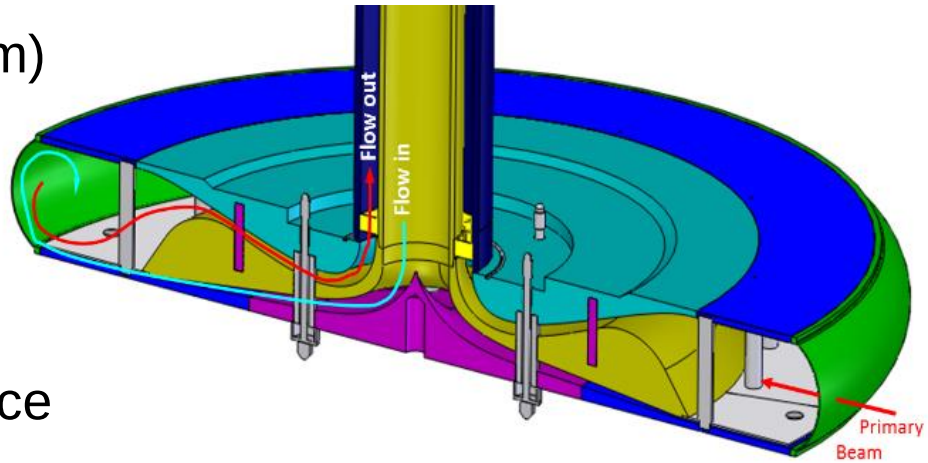

- High power density challenge met by choice of water-filled rotating drum
  - Using water to stop the primary beam and absorb beam power

FRIB Primary Beam Dump
Challenges Addressed in Simulations and Tests

- Extreme conditions due to heavy ion beams
  - Energy loss of U beam at 156 MeV/u in Ti-alloy shell is 4 order of magnitude higher compare to proton beam at 1 GeV
- High power – up to 60 kW in the shell
  - Thermal stress
  - Water near the boiling point limits the maximum temperature of the shell
  - Sufficient wall heat transfer required
- Rotating drum: 600 rpm
  - Temperature variation at each turn ⇨ Fatigue, stress wave through the drum shell
  - Elevated mechanical stress due to internal water pressure
  - Vibration and mechanical resonances
- Water
  - Corrosion, Cavitation
- Swift heavy ions
  - Radiation damage in material
  - Sputtering
  - Radiolysis (gas production)

Sufficient Wall Heat Transfer Required to Avoid Nucleate Boiling near the Shell

- Thermal analysis
  - To avoid nucleate boiling at 8 bar water pressure, maximum temperature of the shell is limited to 150 ºC
  - Computational Fluid Dynamics simulations take into account the power deposition both in the shell and in the water
  - Larger contribution from the shell heating
  - Max. water temperature of 150 ºC found for 100 kW 238U beam (σ = 10 mm)
  - Lower temperature (<100 ºC) for 400 kW 16O beam
- High Wall Heat Transfer Coefficient (WHTC) with high turbulent water flow needed to remove heat from beam dump shell
  - New geometry with double shell and force convection is considered for the full power with heaviest beams

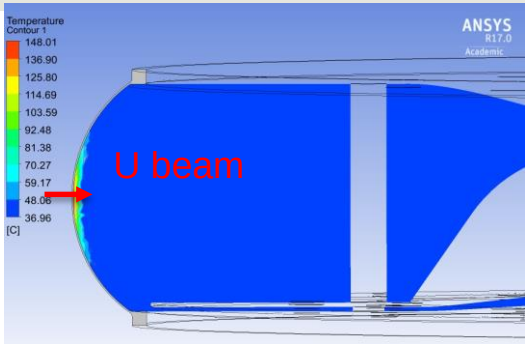

100 kW – U beam σ = 10 mm

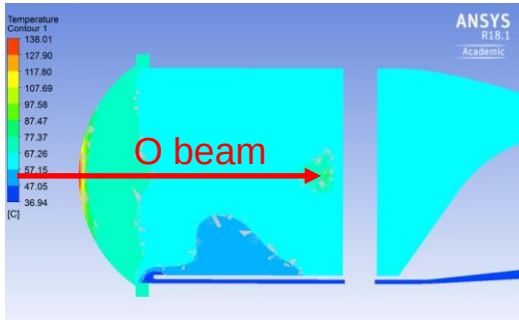

400 kW – O beam σ = 4 mm

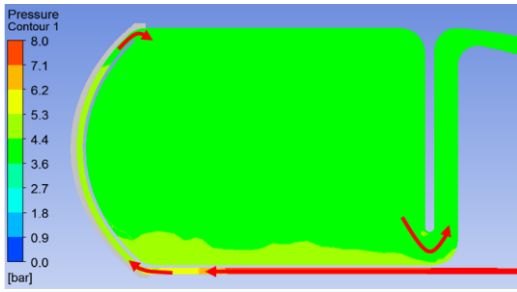

Double shell geometry

M. Avilov et al., NIMB 376 (2016) 24-27

Beam Dump Drum Design
Staged Approach for Full Power

- Robust single shell beam dump with 1mm-thick machined wall
  - Single shell geometry with single-phase fluid flow
    - » Suitable for full power for light beams (mass < 36) and up to 50 kW for ^{238}U beam
- In parallel: development of 0.5 mm shell drum using 3D printing Ti-6Al-4V
  - Single shell suitable for full power for light beams (mass < 64), up to 100 kW for 238U beam
  - Double shell for all primary beams at full power
    - » Build double-shell drum based on experience with single-shell drum during power ramp-up

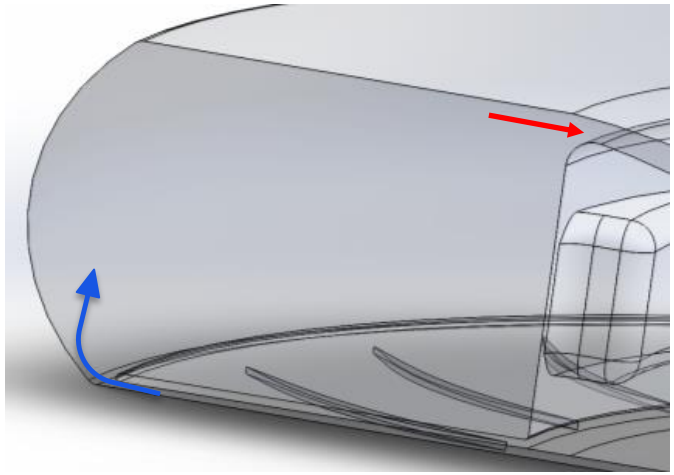

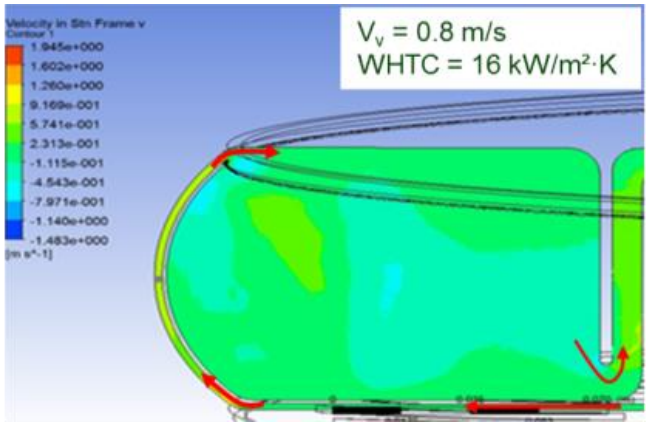

Test to Validate Heat Removal Assumptions [1]

- Testing with high energy electron beam at Novosibirsk with ¼ scale mock-up: a 0.5 mm thick shell made of 3D printed Ti-6Al-4V
  - High energy electron beam 0.8 – 1.2 MeV, power up to 90 kW sufficient to represent the BD thermal conditions
  - Up to 6 gpm flow rate and up to 1200 rpm rotational velocity sufficient to simulate the fluid flow similar to that in a real beam dump
  - Both single and double shell designs were tested
- Validate the maximum heat flux in the beam dump shell
- Determine Wall Heat Transfer Coefficient (WHTC) in rotating system

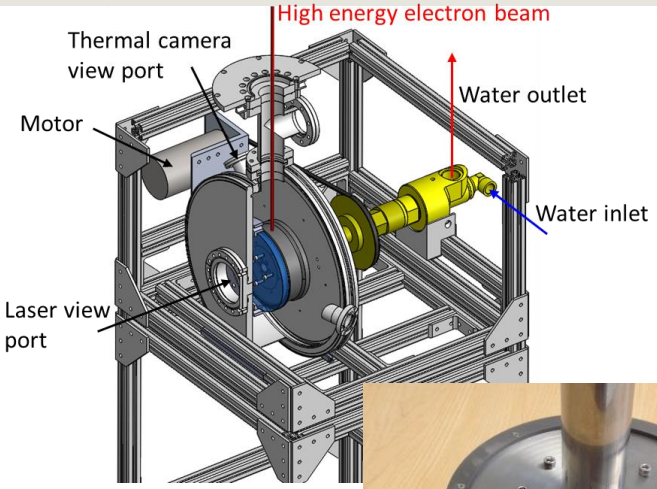

Single shell geometry

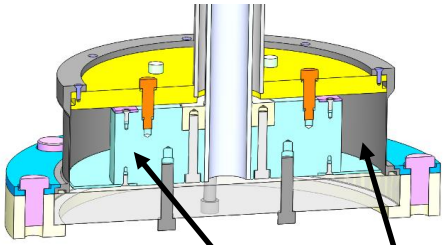

Double shell geometry

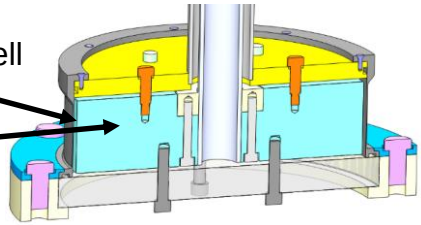

Ti alloy Shell

Al hub

Budker Institute of Nuclear Physics

Test to Validate Heat Removal Assumptions [2]

- Good agreement between experimental data and simulation results for single shell geometry (independent of the beam size) and for double shell geometry (small beam)
- Disagreement between experimental data and simulation for one case (double shell, large beam)
  - Difference is likely due to some complex water flow pattern that is not taken into account in ANSYS

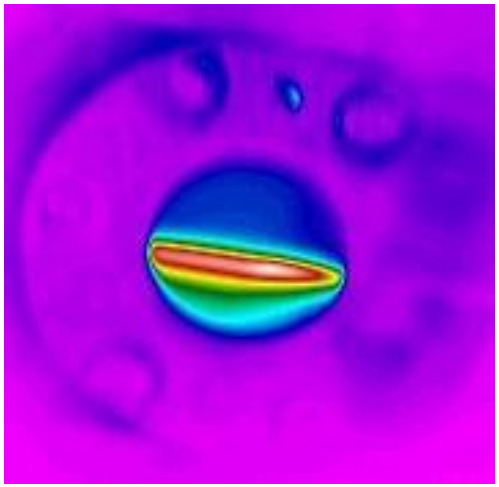

Small beam – Double shell

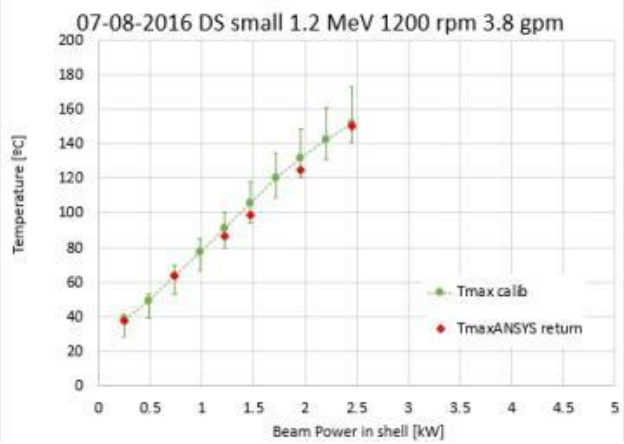

Small beam – Double shell

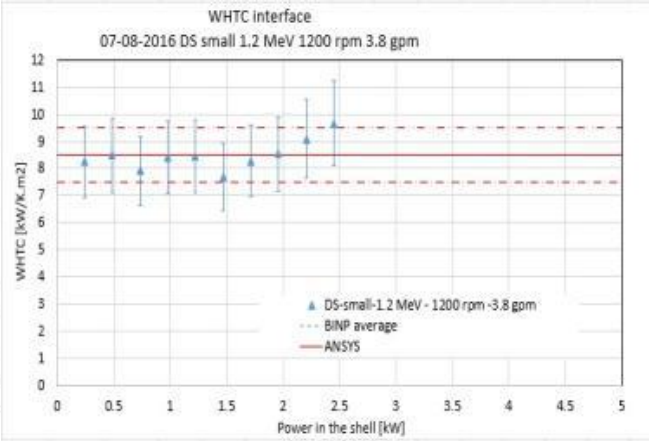

Large beam – Double shell

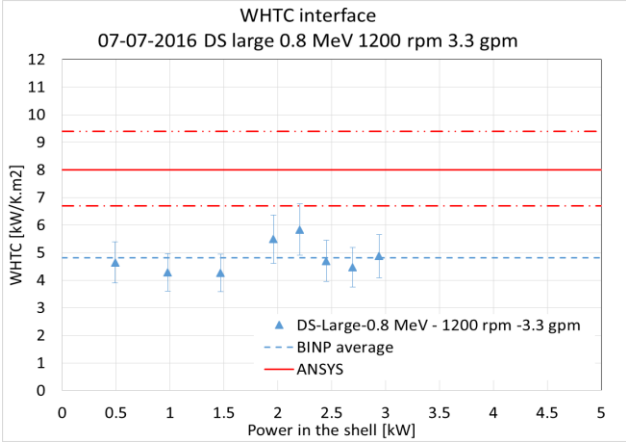

Thermal, Mechanical Analyses
Beam Dump Shell Stress Far Below the Stress Limit

- Thermal analysis
  - To avoid nucleate boiling at 8 bar of water pressure, maximum temperature of the shell is limited to 150 ºC
- Mechanical analysis
  - Safety factor ~ 4 at 8 bar water pressure near the shell. Shell profile optimized to mitigate mechanical stress
- Thermo-mechanical analysis
  - stress induced by the temperature variation at each turn is significantly lower than from pressure (~ 80 MPa)
  - stress wave contribution less than 10% of the total stress
- Fatigue analysis
  - safety factor ~ 3 for 8 bar pressure
- Modal analysis
  - First natural frequency 15.2 Hz found above the operational rotation frequency of 10 Hz

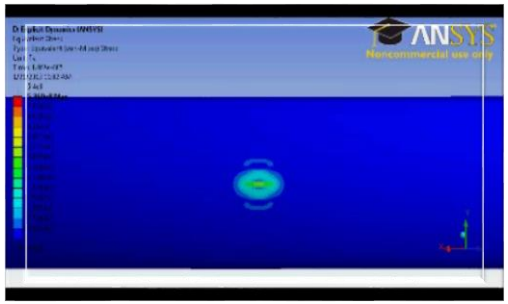

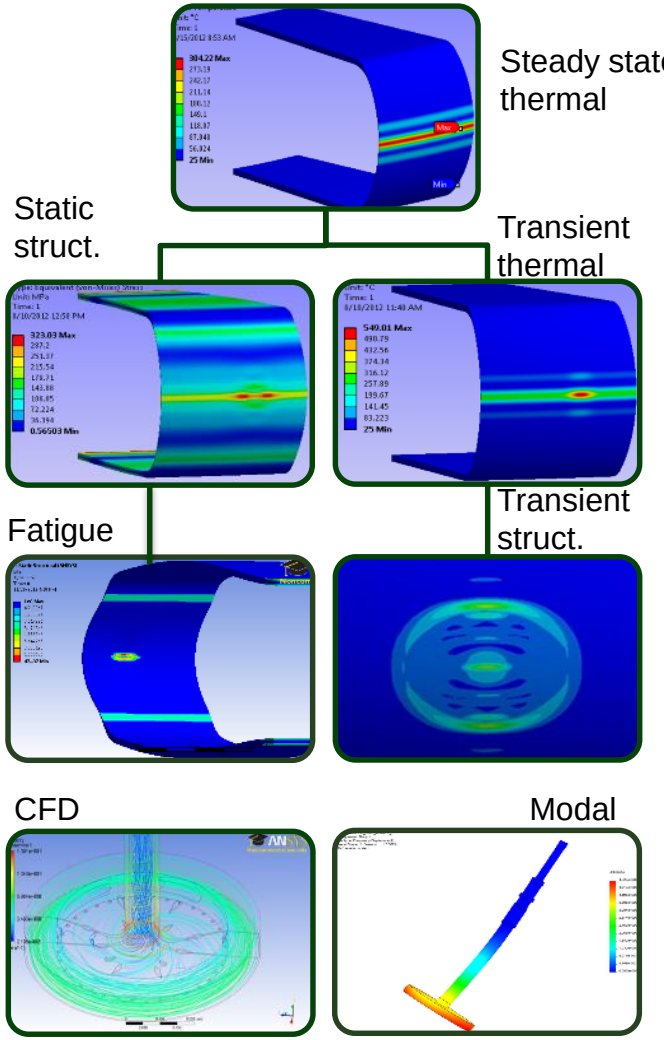

Radiation Damage in Material

- Irradiation induces material changes that could decrease the Beam Dump performance
  - Thermo-mechanical properties (thermal conductivity, hardening, embrittlement), electronic properties (resistivity), Structural properties (microstructure and dimensional changes), sputtering
  - Combined effects
    - » Thermal and radiation enhanced creep, reduction of creep life
    - » Corrosion combined with radiolysis
    - » Gas production enhanced embrittlement
- Data exists for neutron and proton irradiation but no data were found for heavy ion irradiation in Ti-alloys
- No heavy ion beam facility exists that allows us to test all extreme conditions combined together
- Perform studies that combine some material challenges using existing facilities
  - Electron beams, neutron beams, Swift Heavy Ion (SHI) beams
  - Radiation damage, corrosion, creep

F. Marti et al., Proceedings of Linear Accelerator Conference LINAC2010, Tsukuba, Japan, TUP105, 2010.

Material Studies
Impact of Irradiation on Beam Dump Drum Lifetime

- Material study of Ti-6Al-4V alloys under irradiation to assess beam dump shell lifetime and understand the 3D printed material behavior compared with standard Ti-6Al-4V
- Low energy heavy ion irradiation at University Notre Dame and GANIL-IRRSUD facilities performed to study mechanical property changes of Ti-alloys with radiation damages
  - Reach high dose (up to 10-20 dpa/day) without activation of the samples
  - Low range limits the analysis to few characterizations (,XRD, SEM, TEM, EBSD, Nano-indentation,…)
- Test at BNL-BLIP with RaDIATE collaborators
  - Irradiation with high energy protons during 8 weeks (up to 1 dpa in Ti samples) and characterize property changes due to proton induced damage
  - FRIB and KEK will irradiate DMLS and conventional Ti-alloy (Grade 5 and 23), compare and share results

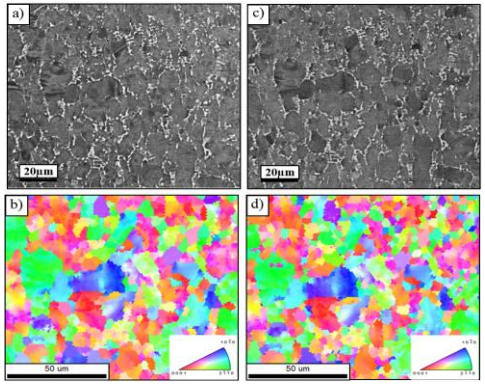

Backscatter Electron images and Inverse Pole Figure maps before and after irradiation, 92 MeV ^{131}Xe, T= 25ºC fluence 2.10^{14} ions/cm^{-2}

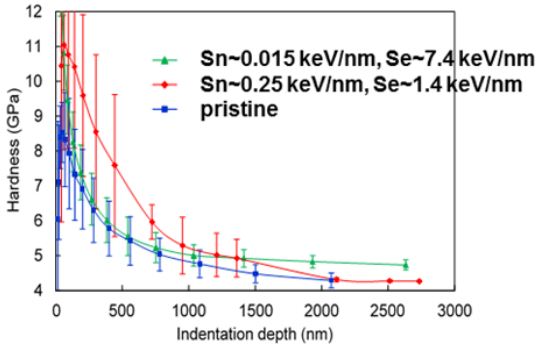

Nanoindentation Hardness ,^{36}Ar @ 36 MeV – T_{irr} = 350°C – fluence of 10^{15} ions/cm²

A. Amroussia et al., NIMB 365 (2015) 515-521

Material Study with High Energy Heavy Ions
Corrosion Test for a Better Understanding of Lifetime

- Short irradiation at NSCL with high energy heavy ion beam
  - Windows made of 3D printed Ti-6Al-4V
  - Water cell fabricated
  - Benchmark gas production in water
  - Study first stage of corrosion on Ti-6Al-4V

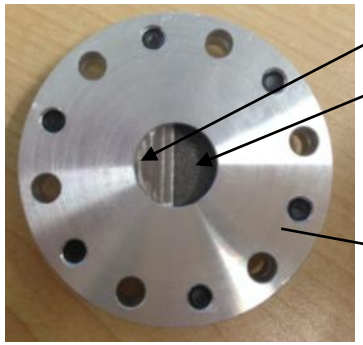

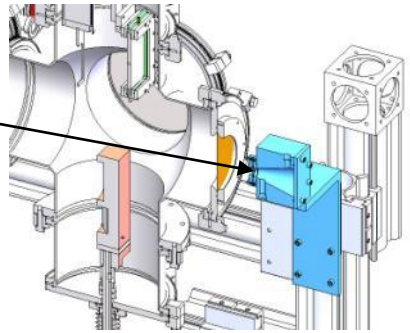

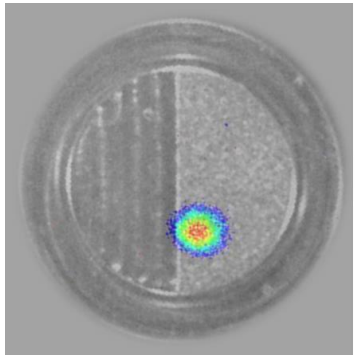

Optical Image
IVIS Lumina LT

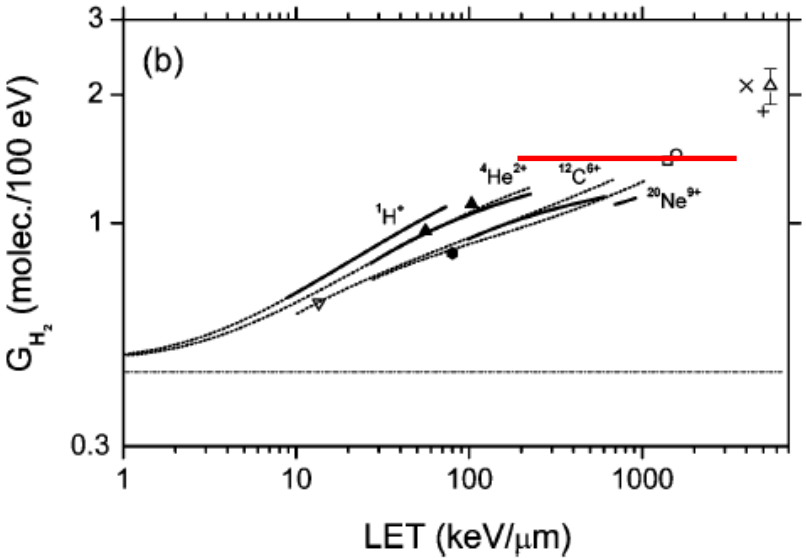

Meesungnoen, J.; Jay-Gerin, J. P. J. Phys. Chem. A., ***2005****, 109, 6406 – 6419.*

- LET range: 200 keV/μm to 3500 keV/μm
- Average LET ≅ 800 keV/μm
- Average G-value ≅ 1.5

47-G. Severin – Friday morning

Beam Dump Drum Rotation Module

- The beam dump drum itself is a challenging part but the beam dump assembly has its own challenges
  - Rotating water seal needs to be compatible with vacuum and irradiation environment
  - Motor needs to be compatible with vacuum and irradiation environment

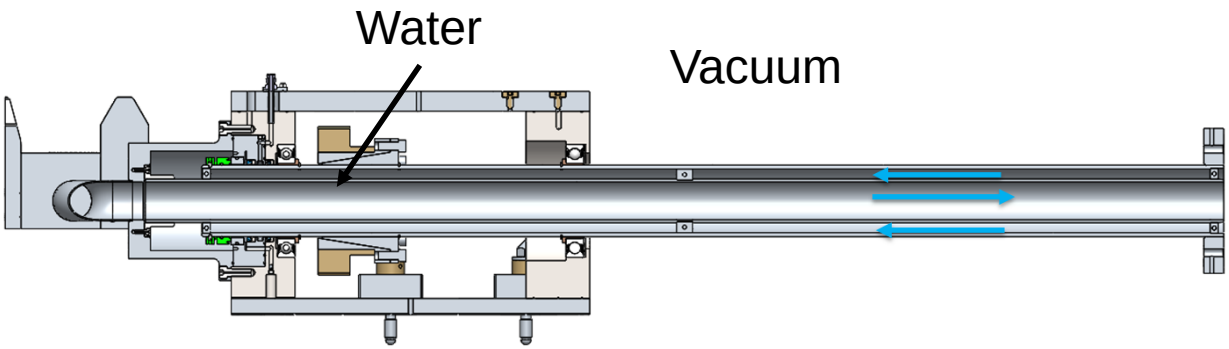

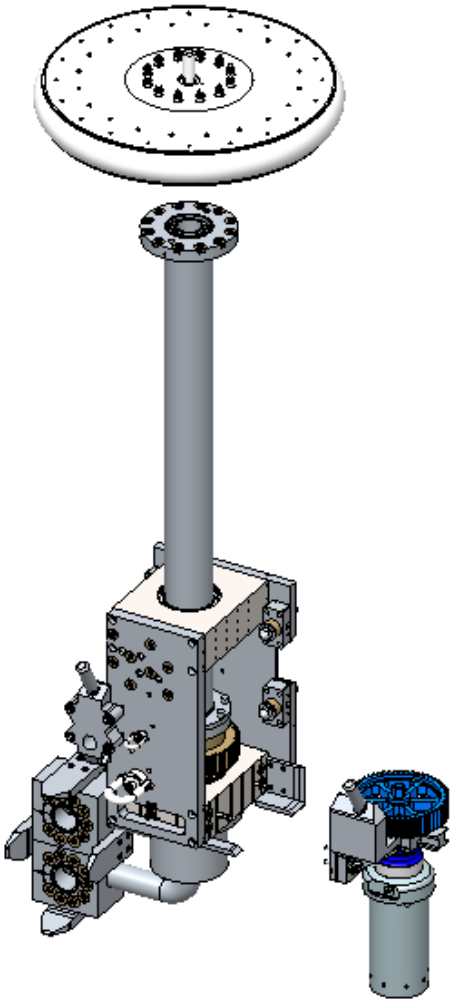

Mechanical Testing
Beam Dump Rotating Seal Testing

- Successfully operated up to 400 rpm (2/3 of specification for full power operation, 600 rpm)
- System (drum rotation module within the vacuum chamber) shows acceptable leak rate of ~ 3e-4 Torr L/s
- No significant water leak observed during operation of the system up to 400 rpm and for other FRIB conditions

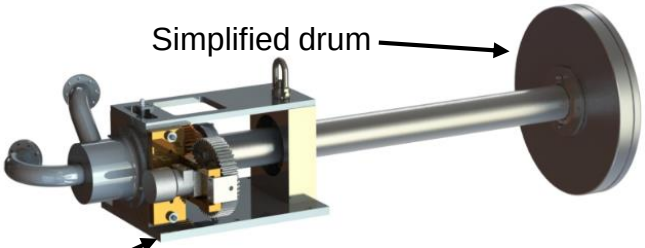

Rotation module

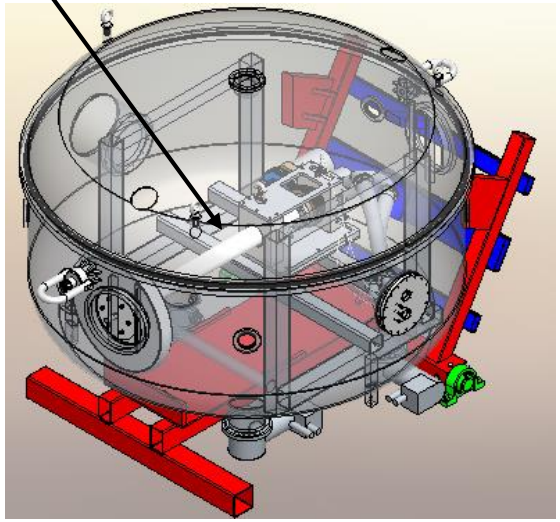

Acknowledgements

- MSU Department of Chemical Engineering and Material Science
  - A. Amroussia, C. Boehlert, S. Balachandran Nair, P.Kwon, A. Lee
- GANIL-CIMAP
  - F. Durantel, C. Grygiel, I. Monnet, F. Moisy, M. Toulemonde
- Notre Dame University
  - T. Ahn, D. Robertson, E. Stech
- University of Michigan
  - R. Ewing, M. Lang, W.X. Li, F.X. Zhang, G. Was
- Budker Institute of Nuclear Physics
  - S. Fadeev, M. Golkovsky, N. Kuksanov, R. Salimov, I. Chakin
- Radiate Collaboration
- NSCL
  - G. Severin
- FRIB
  - M. Avilov, S. Fernandes, P. Ferrante, B. Forgacs, B. Furr, J. Kramer, M. Larmann, W. Mittig, H. Patel, B. Peruski, B. Phillips, M. Schein, G. Severin

This work was partially supported by the U.S. Department of Energy, Office of Science under Cooperative Agreement DE-SC0000661. This work was also supported by Michigan State University under the Strategic Partnership Grant “FRIB - Materials in Extreme Environments”.
The in-situ TEM irradiation was supported by the U.S. Department of Energy, Office of Nuclear Energy under DOE Idaho Operations Office Contract DE-AC07-051D14517 as part of NSUF experiment.

Summary
Beam Dump Assembly Delivered

- Despite many challenges during fabrication, we delivered the beam dump assembly on 28 September 2018
  - Integration frame assembly
  - Beam dump rotation module assembly
  - Drum translation module assembly
  - Diagnostic translation module assembly

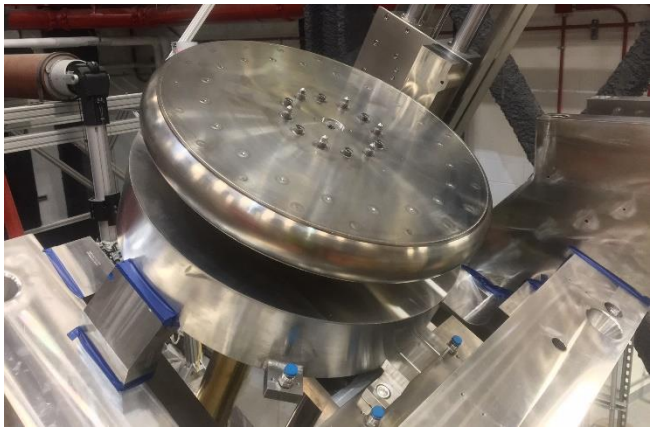

Ti-alloy drum assembled on the beam dump rotation module

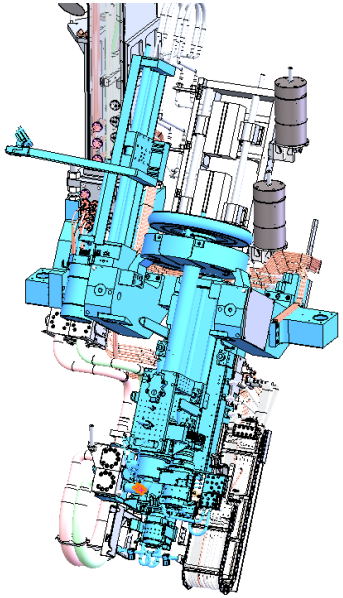

Beam dump assembly

Thank you for your Attention!

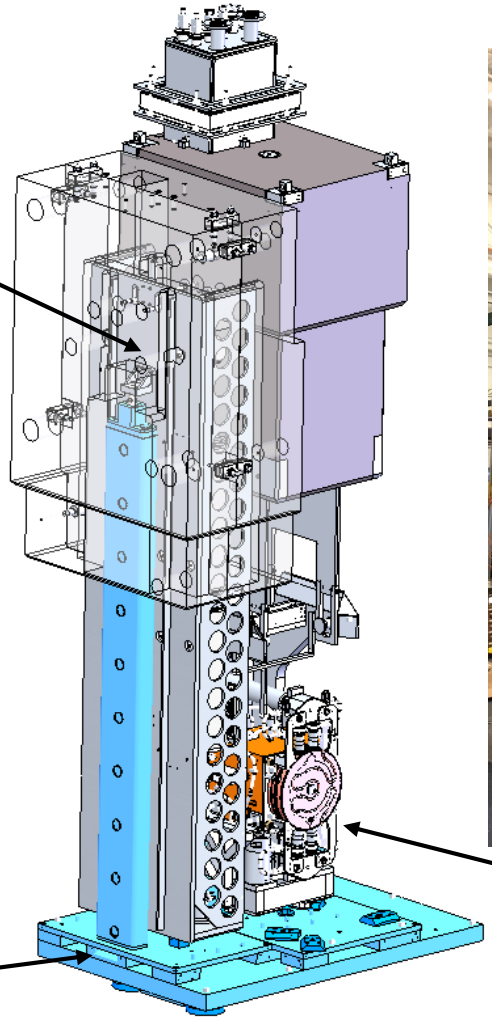

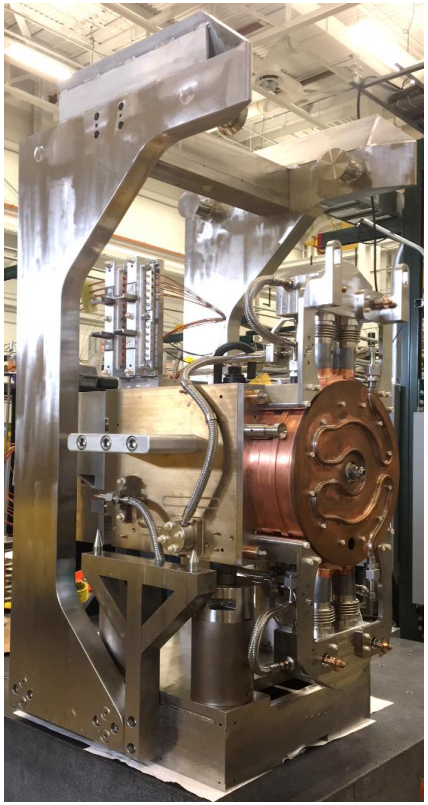

Back-up Slides

Beam Dump Drum Support Progress
3D Printed Material for Beam Dump Drum

- 3D printer technology is alternative manufacturing method and likely the best approach for drum shell fabrication for high power
- Several technologies exist to support beam dump drum fabrication
  - ARCAM EBM® (Electron Beam Melting) one of the most promising
    - » Arcam EBM® process takes place in vacuum and at high temperature, the components produced are free from residual stress and have material properties better than cast and comparable to wrought material.
    - » First scale 1 segment was built without stress concentration