LBNF Nitrogen System Status & Schedule

David Montanari

LBNF/DUNE FS Interface Meeting

1 November 2018

Scope

- **Design-Build** project (Engineering, Procurement, Construction - EPC) consisting of all items and costs for labor, equipment, transportation, overhead, bonding, safety oversight, QC oversight and supervision for the engineering, design, fabrication and mobilization required to procure, install and commission a Nitrogen System composed of a LN2 Refrigeration System and LN2 Storage.
- **LN2 Refrigeration System** (inclusive of capital spares and 2-year operational spares):
  - Nitrogen Compression (4 GN2 compressors, above ground).
  - Nitrogen Refrigeration (4 units, comprised of cold boxes and expanders, each one 100 kW cooling, underground).
- **LN2 Storage**:
  - 52,834 gal (200 m^3) of buffer backup storage underground.
- **Argon condensers** (supplied by Others):
  - To condense/recondense Argon via heat evaporation of LN2 in heat exchangers. Underground.
- **LN2/GN2 Interconnecting Piping** (supplied by FRA).
  - GN2 from above ground to underground.
  - LN2 from buffer storage to condensers.
  - GN2 from condensers back to Nitrogen Refrigeration System
  - All supplied by FRA.

Nitrogen System Block Diagram

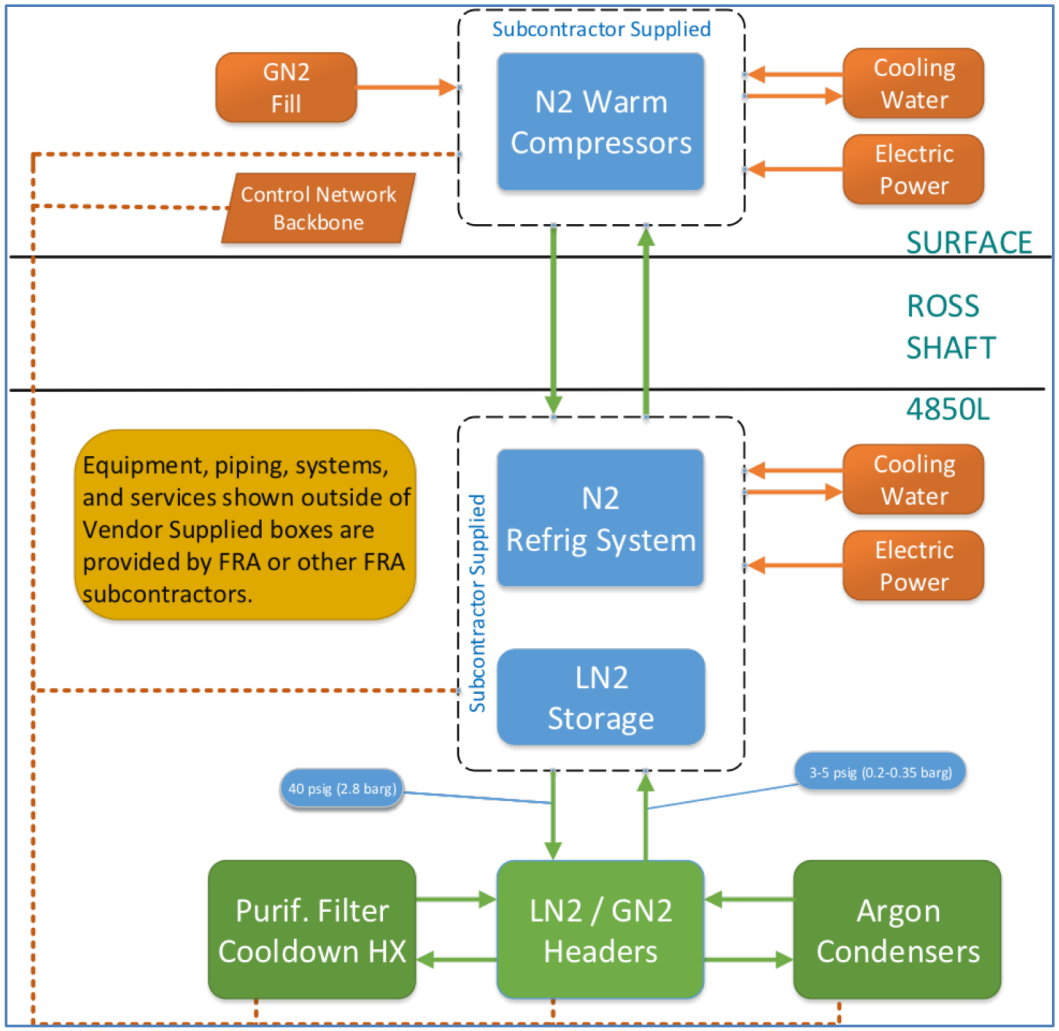

Cryogenics Process Flow Diagram

NO cryogenics in the shaft.

Infrastructure
Proximity
Internal

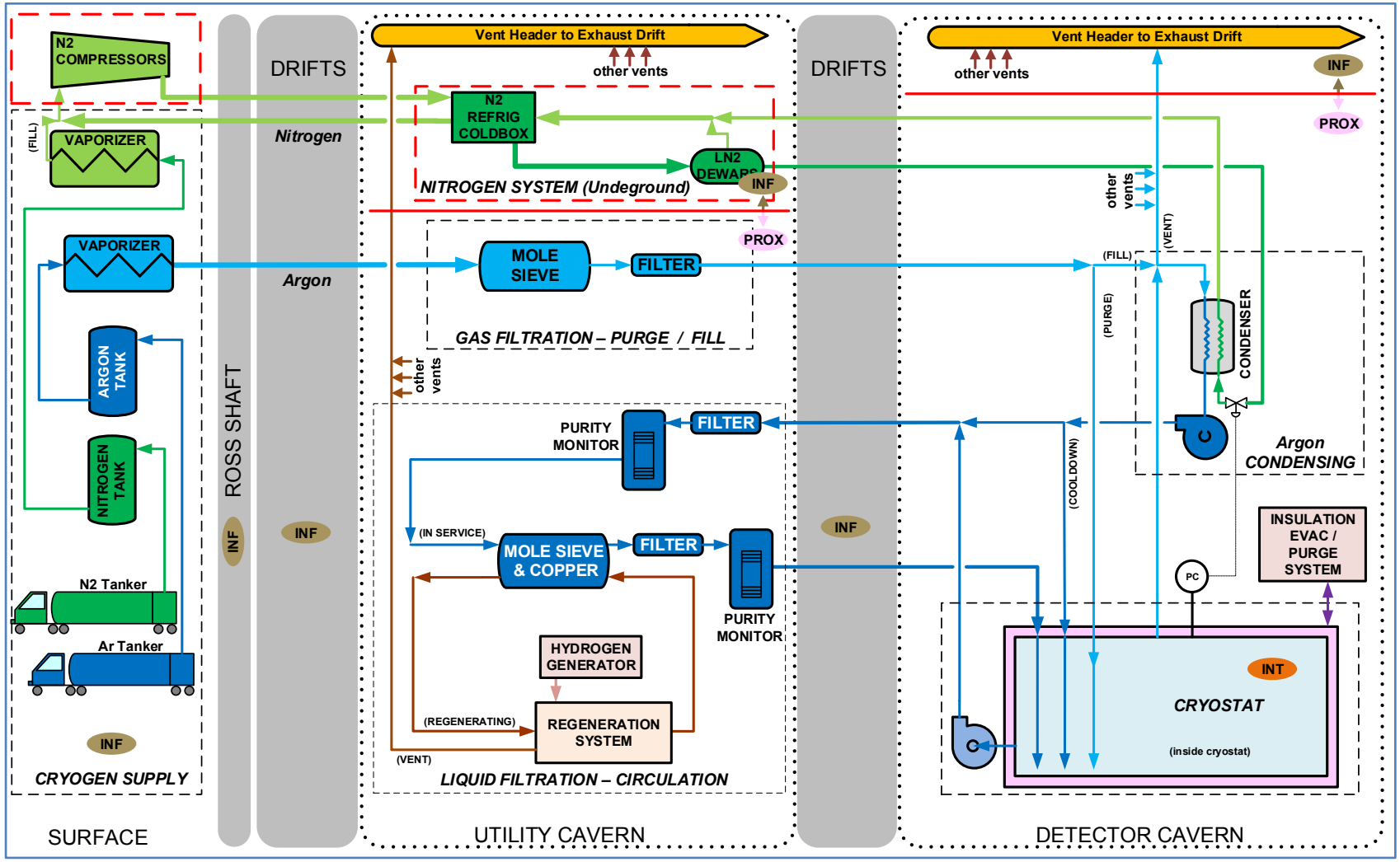

Solicitation to Award Timeline – Estimated

- **10/31/18 – DOE RFP Approvals Complete. (within days)**
- **11/9/18 – Solicitation Posted. (doable if DOE within days)**
  - 105 days for Offerors to Submit Proposals.
  - Mandatory Site Visit in early December (tentatively Dec 11-12).
- **2/22/19 – Proposals Due**
- **4/23/19 – Evaluation Complete (60 days)**
- **6/24/19 – DOE Award Approvals Complete (60 days)**
- **6/28/19 – Subcontract Award**

Current Procurement Approach & Timeline

Goal: to be ready for beginning of Ops: Q2 CY 2026 (May-2026).

Solicitation expected in Nov 2018 with award expected Q2 CY 2019.

- **Phase 1 – Design (Full system):**
  - Preliminary and Final Design (Compression, Refrigeration, Storage)
  - Start Q2 CY 2019 (upon contract award). (Driven by CD-2)
  - Completed NLT Q2 CY 2020.
- **Phase 2 – Fabricate, Install, Commission First 3 units Nitrogen Refrigeration and LN2 storage (Detectors #1, #2).**
  - Start NET Q1 CY 2021 (Jan-2021). (Driven by DOE Funding Profile)
  - Completed NLT Q2 CY 2026 (May-2026). (Driven by beginning of Ops)
- **Phase 3 – Fabricate, Install, Commission 4th unit Nitrogen Refrigeration (Detectors #3, #4).**
  - Start NET Q2 CY 2023 (Feb-2023). (Arbitrary, depends on Non-DOE partner)
  - Completed NLT Q2 CY 2027. (Driven by beginning of cryo Ops for Detector #3)

Thanks

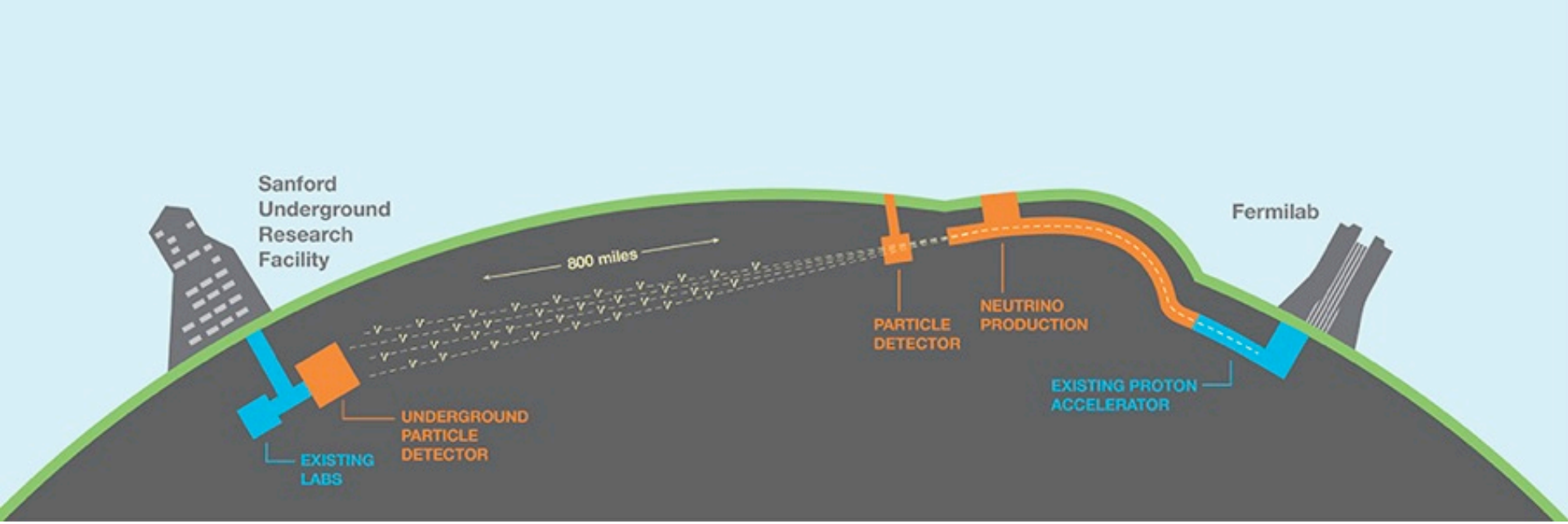
Sanford
Underground
Research
Facility
800 miles
Fermilab
PARTICLE
DETECTOR
NEUTRINO
PRODUCTION
EXISTING PROTON
ACCELERATOR
UNDERGROUND
PARTICLE
DETECTOR
EXISTING
LABS

Backup

DOE Approvals

Acquisition Plan

- 1/30/17 – Submitted to FSO
- 4/19/18 – Approved by FSO
- 5/30/18 – Approved by IRB
- 6/5/18 – Approved by HCA
- 6/8/18 – Approved by MA

Subcontract Award

- TBD – Submitted to FSO
- TBD – Approved by FSO
- TBD – Approved by IRB
- TBD – Approved by HCA
- TBD – Approved by MA

Solicitation Package

- 7/19/18 – Submitted to FSO ✓
- 8/27/18 – Approved by FSO ✓
- 10/24/18 – Approved by IRB ✓
- TBD – Approved by HCA (Expected within days).
- TBD – Approved by MA (Expected within days).

Refrigeration loads

	Unit Loads (kW)	Scenarios										Sub-Scenarios							
		1	3	4	6	7	A	C	D	F	G	i	ii	iii	iv	v	vi	vii	viii
Recondenser Load, 1st Cryostat												**Recondenser Load, 1st Cryostat**							
Cryostat Heat Ingress	28.7	28.7	28.7	28.7	28.7	28.7	28.7	28.7	28.7	28.7	28.7	28.7	28.7	28.7	28.7	28.7	28.7	28.7	28.7
With 2 Recirculation Pumps	10.6		10.6	10.6	10.6		10.6	10.6	10.6	10.6			10.6	10.6	10.6	10.6	10.6	10.6	10.6
With 4 Recirculation Pumps	21.2	21.2										21.2							
Piping and Purification vessel Heat ingress	3.7	3.7	3.7	3.7	3.7		3.7	3.7	3.7	3.7		3.7	3.7	3.7	3.7	3.7	3.7	3.7	3.7
Detector Electronics in cryostat	23.7		23.7	23.7	23.7		23.7	23.7	23.7	23.7			23.7	23.7	23.7	23.7	23.7	23.7	23.7
Cryostat Fill - GAr transfer / recondense		222.40										192.40							
Number of condensers in operation		3	1	1	1	1	1	1	1	1	1	3	1	1	1	1	1	1	1
Condenser Load		**276.0**	**66.7**	**66.7**	**66.7**	**28.7**	**66.7**	**66.7**	**66.7**	**66.7**	**28.7**	**246.0**	**66.7**	**66.7**	**66.7**	**66.7**	**66.7**	**66.7**	**66.7**
Recondenser Load, 2nd Cryostat												**Recondenser Load, 2nd Cryostat**							
Cryostat Heat Ingress	28.7			28.7	28.7	28.7	28.7	28.7	28.7	28.7	28.7			28.7	28.7	28.7	28.7	28.7	28.7
With 2 Recirculation Pumps	10.6				10.6		10.6	10.6	10.6	10.6					10.6	10.6	10.6	10.6	10.6
With 4 Recirculation Pumps	21.2			21.2										21.2					
Piping and Purification vessel Heat ingress	3.7			3.7	3.7		3.7	3.7	3.7	3.7				3.7	3.7	3.7	3.7	3.7	3.7
Detector Electronics in cryostat	23.7				23.7		23.7	23.7	23.7	23.7					23.7	23.7	23.7	23.7	23.7
Cryostat Fill - GAr transfer / recondense				155.70										125.70					
Number of condensers in operation				3	1	1	1	1	1	1	1			2	1	1	1	1	1
Condenser Load				**209.3**	**66.7**	**28.7**	**66.7**	**66.7**	**66.7**	**66.7**	**28.7**			**179.3**	**66.7**	**66.7**	**66.7**	**66.7**	**66.7**
Recondenser Load, 3rd Cryostat												**Recondenser Load, 3rd Cryostat**							
Cryostat Heat Ingress	28.8						28.8	28.8	28.8	28.8	28.8					28.8	28.8	28.8	28.8
With 2 Recirculation Pumps	10.6							10.6	10.6	10.6							10.6	10.6	10.6
With 4 Recirculation Pumps	21.2						21.2									21.2			
Piping and Purification vessel Heat ingress	3.7						3.7	3.7	3.7	3.7						3.7	3.7	3.7	3.7
Detector Electronics in cryostat	23.7							23.7	23.7	23.7							23.7	23.7	23.7
Cryostat Fill - GAr transfer / recondense							188.90									158.90			
Number of condensers in operation							3	1	1	1	1					3	1	1	1
Condenser Load							**242.6**	**66.8**	**66.8**	**66.8**	**28.8**					**212.6**	**66.8**	**66.8**	**66.8**
Recondenser Load, 4th Cryostat												**Recondenser Load, 4th Cryostat**							
Cryostat Heat Ingress	28.8								28.8	28.8	28.8							28.8	28.8
With 2 Recirculation Pumps	10.6									10.6									10.6
With 4 Recirculation Pumps	21.2								21.2									21.2	
Piping and Purification vessel Heat ingress	3.7								3.7	3.7								3.7	3.7
Detector Electronics in cryostat	23.7									23.7									23.7
Cryostat Fill - GAr transfer / recondense									122.10									92.10	
Number of condensers in operation									2	1	1							2	1
Condenser Load									**175.8**	**66.8**	**28.8**							**145.8**	**66.8**
Cavern LN2 storage tank heat ingress (1 kW/each)*	1	24	24	24	24		24	24	24	24		24	24	24	24	24	24	24	24
Purification vessel Regen cooling	30											30.0	30.0	30.0	30.0	30.0	30.0	30.0	30.0
Refrigeration Needed		**300.0**	**90.7**	**300.0**	**157.4**	**57.4**	**400.0**	**224.2**	**400.0**	**291.0**	**115.0**	**300.0**	**120.7**	**300.0**	**187.4**	**400.0**	**254.2**	**400.0**	**321.0**
Refrigeration Plants in Operation		**3**	**1**	**3**	**2**	**0**	**4**	**3**	**4**	**3**	**0**	**3**	**2**	**3**	**2**	**4**	**3**	**4**	**4**
Total Refrigeration Capacity Available		300	100	300	200		400	300	400	300		300	200	300	200	400	300	400	400
Required Duty per plant	100	100	91	100	79		100	78	100	97		100	78	100	94	100	85	100	80
Electric trim heater load**		0.0	0.0	0.0	0.0		0.0	9.8	0.0	0.0		0.0	35.3	0.0	0.0	0.0	0.0	0.0	0.0
Total Refrigeration Load		**300**	**90.7**	**300**	**157.4**	**0**	**400**	**234**	**400**	**291.0**	**0**	**300**	**156**	**300**	**187.4**	**400**	**254.2**	**400**	**321.0**
LAr mass in cryostat		17165040		17165040			17165040		17165040		kg								
Fill Time using available cooling above		5836		8336			6871		10630		hr								
(units listed on right side of table)		243.0		347.0			286.0		443.0		days								
		34.7		49.6			40.9		63.3		weeks								
		8.0		**11.4**			**9.4**		**14.6**		months								

2941.37	kg/hr	2059.22	2498.31	1614.84
49.0228	kg/min	34.3204	41.6385	26.914

* A 1kW per storage tank heat leak rate placeholder is used here. Actual dewar heat leak will come from Subcontractor.

Timeline to support DUNE-SP Cold Box test Underground

Goal: to be ready by Start of SP cold box test: Q2 CY 2024 (Apr-2024).

Solicitation expected in Nov 2018 with award expected Q2 CY 2019.

- **Phase 1 – Design:**
  - Preliminary and Final Design (Compression, Refrigeration, Storage)
  - Start Q2 CY 2019 (upon contract award). (Driven by CD-2)
  - Completed NLT Q2 CY 2020. (Can stay unchanged)
- **Phase 2 – Fabricate, Install, Commission First 3 units Nitrogen Refrigeration and LN2 storage**
  - Start NET Q4 CY 2021. (Can stay unchanged, but advanced procurement may be needed)
  - Completed NLT Q1 CY 2024. (1 year after Beneficial Occupancy)
- **Phase 3 – Fabricate, Install, Commission 4th unit Nitrogen Refrigeration.**
  - Unchanged.

Comments

- **Functional specs**: good. No changes.
- **Procurement Schedule**: would actually work better with vendors. Preferred method is from design to commissioning without interruptions. Vendors not expecting it now, so would need to inform for resource planning. 1 year faster than schedule before re-estimate.
- Current **funding profile**:
  - Procurement is ok.
  - Installation needs to be moved up: Obligations for Installation / Commissioning in Q4 CY 2024 (Dec-2024). Would need to start installation in Q2 CY 2023. (8 mo installation + 3 mo for commissioning. The latter could be shortened to 1.5-2 mo according to preliminary conversations with vendors).
- Current installation schedule of **GN2 piping** in the shaft: does not work. Scheduled to be completed in Q2 CY 2026. Would need to be moved up to Q1 CY 2024.
- Alternative ways of supplying cryogens to the cold boxes underground (see talk in ITF Workshop).

Current Procurement Approach & Timeline (Before re-estimate)

Goal: to be ready for beginning of Ops (Q4 CY 2027)

Solicitation expected in Nov 2018 with award expected Q2 CY 2019.

- **Phase 1 – Design:**
  - Preliminary and Final Design (Compression, Refrigeration, Storage)
  - Start Q2 CY 2019 (upon contract award). (Driven by CD-02)
  - Completed NLT Q2 CY 2020.
- **Phase 2 – Fabricate, Install, Commission First 3 units Nitrogen Refrigeration and LN2 storage**
  - Start NET Q3 CY 2021. (Driven by Funding Profile)
  - Completed NLT Q3 CY 2025. (Driven by beginning of Ops)
- **Phase 3 – Fabricate, Install, Commission 4th unit Nitrogen Refrigeration**
  - Not affected.