Timing and Synchronization

David Cussans

DUNE DAQ CDR

CERN, 3/December/18

University of BRISTOL

DUNE

Outline

- Requirements
- Interfaces
- Implementation
- Summary

Requirements: Timestamps

- Distribute a time-stamp
  - Within a detector need synchronization O(1ns)
    - Dictated by photon detection system
- Relative to UTC need synchronization O(1us)
    - Driven by need to synchronize with accelerator
- Between detectors need synchronization O(1ms)
    - Driven by need to correlate super nova triggers.
    - … looser than other constraints, so doesn't drive design.

Requirements: Synchronization, Feedback

- Distribute synchronization signals
  - E.g. for calibrations
    - fire laser
    - align ADCs
- Collect fast feedback
  - From calibration
  - Front end status

Interfaces: “Endpoints”

- Dual Phase
  - Photon Detection System
  - TPC
- Single Phase
  - Photon Detection System
  - TPC
- Calibration
  - Interface common to DP and SP

Implementation: Single Phase

- Single Phase: developed for protoDUNE-SP
  - clock encoded with data
  - 250MBit/s
  - 1000Base-Bx components
    - Single mode fibre
    - 1310nm , 1480nm
  - Passive optical splitting
  - Two hot swap systems
  - 62.5 MHz clock
  - Light weight endpoint
  - Fixed (low) latency message passing to end-points

Implementation: Dual Phase

- Dual Phase: IEEE-1588
  - White Rabbit implementation
  - (DP has fewer end points and different development history)
  - 125 MHz system clock
    - Locked w.r.t. 65.5 MHz clock in Single Phase

Implementation: protoDUNE-SP

- SP Protocol developed and deployed in protoDUNE-SP
- "reference implementation" developed for hardware, firmware
  - COTS FPGA module, custom FMC
  - Can act as either master or slave
  - Used by groups developing readout
  - Identified need to constantly encourage early integration

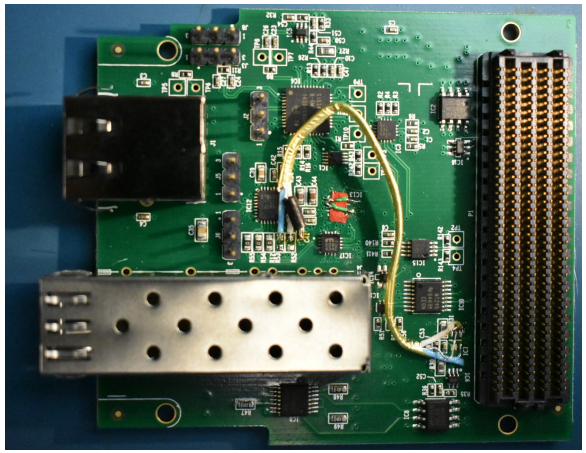

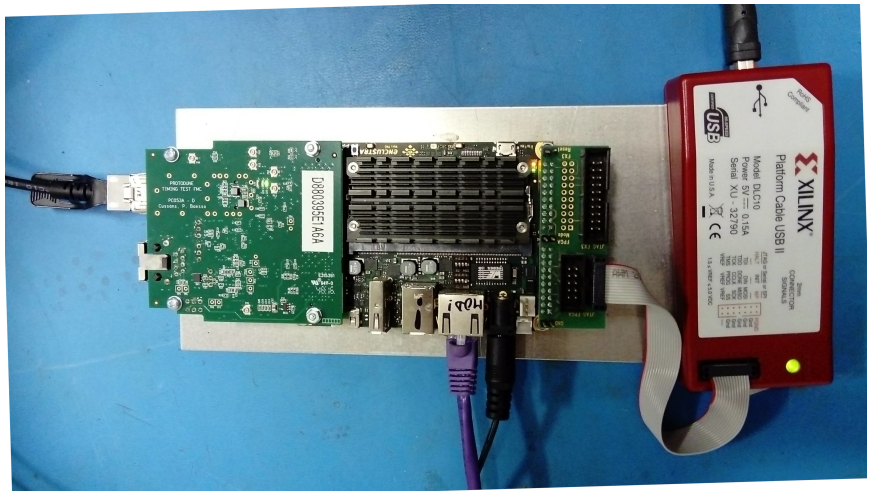

Implementation: Redundancy

- Separate GPS antenna, one at the head of each shaft
- Two separate GPS receivers in CUC
  - Hot swap between the two antenna feeds

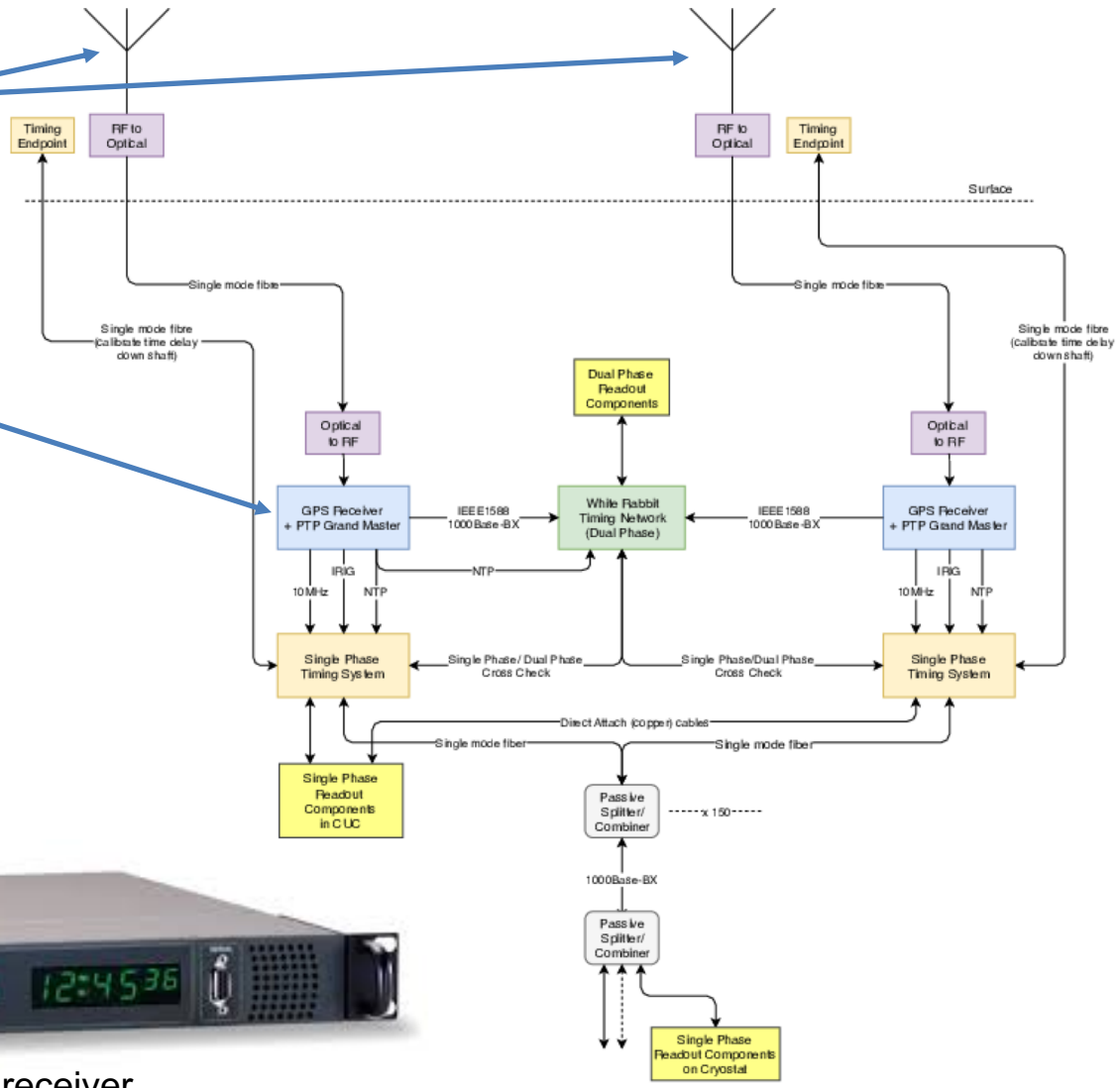

Spectracom Securesync GPS receiver

Implementation: Resilience

- In normal running, one GPS receiver attached to each antenna
  - Continuously compare time-stamps produced by two independent systems →help detect problems with timing
- Fibre back to surface, used to calibrate fibre length, can be used to cross check

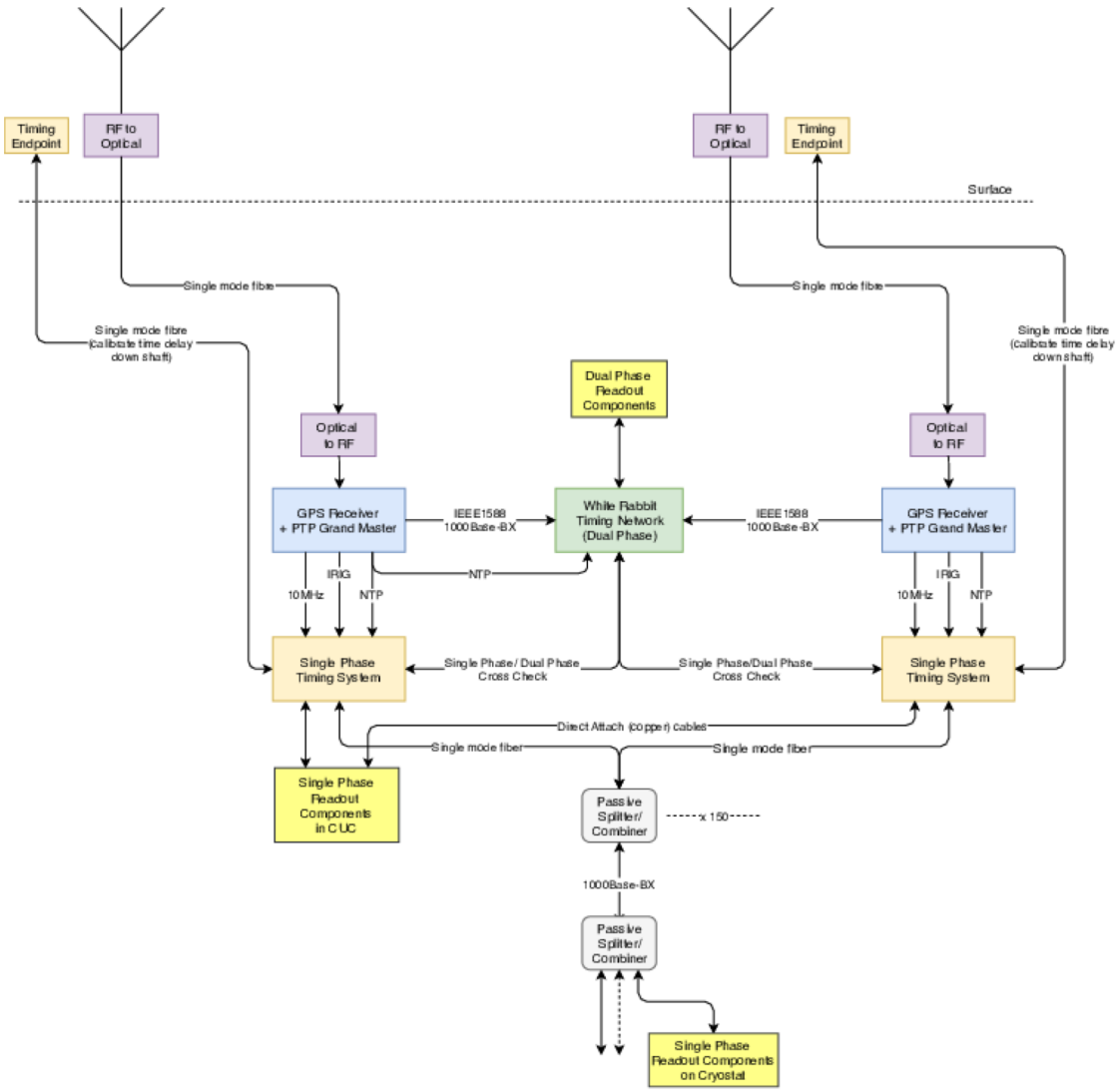

Implementation: Resilience

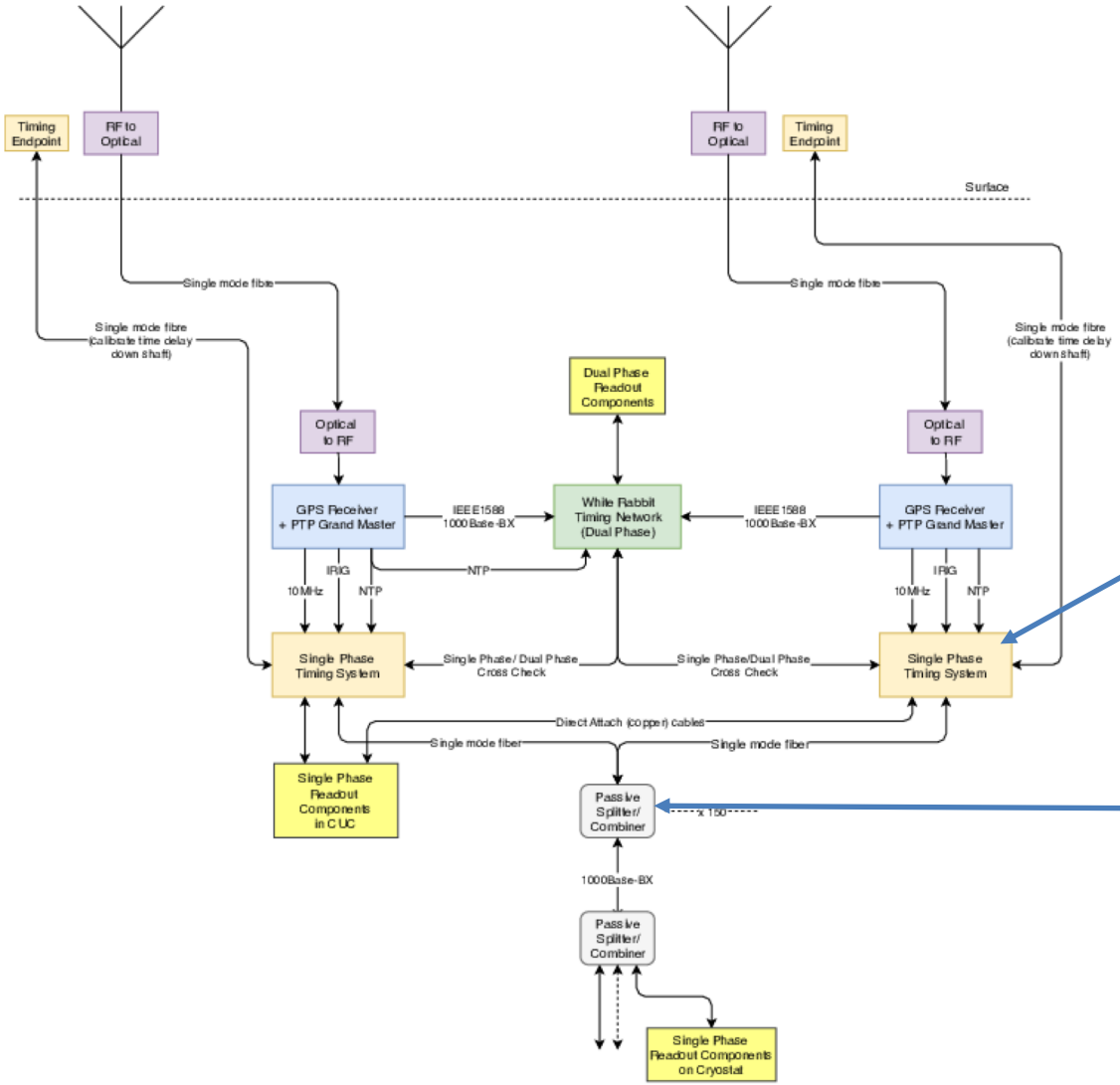

- Two independent "master crates" for SP
  - One as master, other as hot-swap
  - Signals combined by passive optical splitting
- Two independent IEEE1588 feeds to DP

Implementation: SP Master Crate

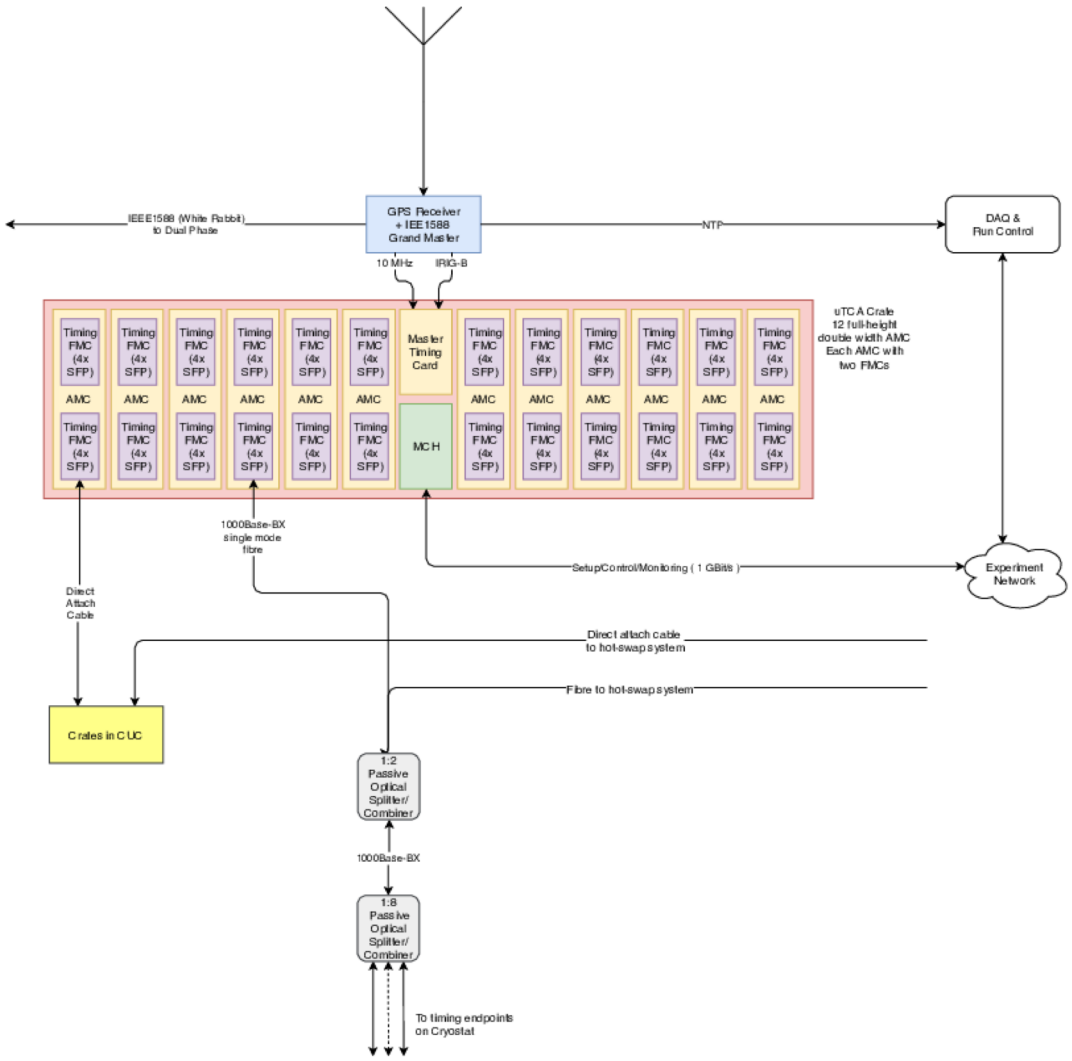

- Based on uTCA
- Custom AMC interfacing to GPS receiver
- COTS AMC carrying custom FMC
- FMC with SFP cages
  - 1000Base-BX fibres
  - Direct attach cables for endpoints in CUC

Development Kits: "DAQ in a Box"

- DAQ consortium will produce development kits
  - For small scale DAQ at test-stands, ITF
  - To assist readout development
  - Based on PCIe cards in COTs PC
    - Felix for data reception
    - Off-the-shelf PCIe carrier with custom (timing) FMC
      - e.g. OHWR Spec / Spec7

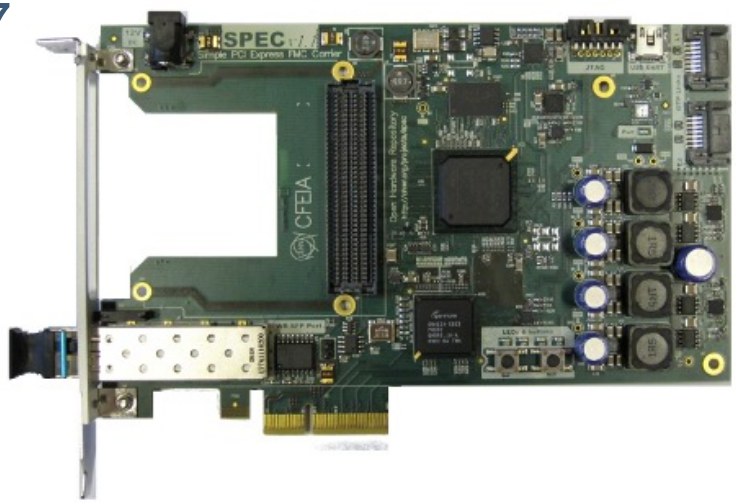

Schedule

- Timing system needs to be available early
  - For prototyping by teams working on readout, calibration
- 2019-2020: Prototyping
- 2020-2021: Production of timing hardware for test-stands
  - Will be replaced by pre-production prototypes/ final hardware later
- 2021: Pre-production, finalize QC testing
- 2022: Production and installation

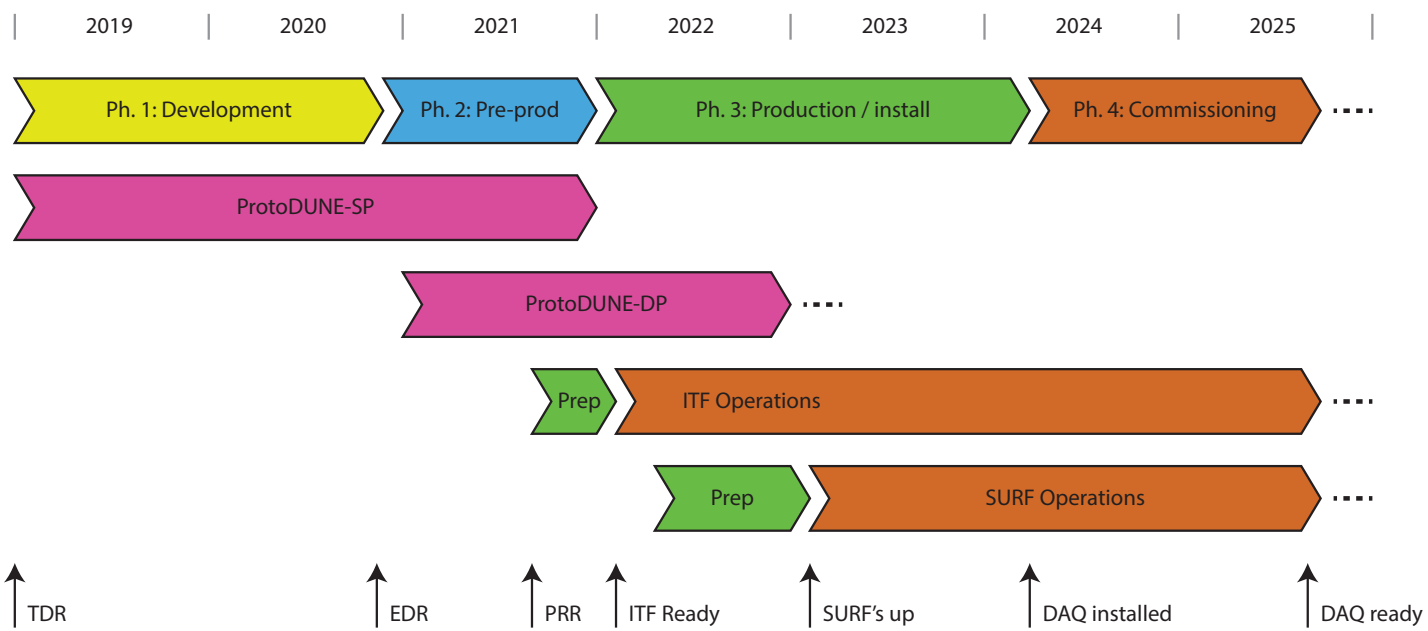

Summary

- DUNE Timing system will deliver timestamps to all components of detector
- Redundancy and error detection
  - Independent antennae and GPS receivers allow detection of failure of timing system
    - (Except for correlated failures)
  - Hot swap systems improve resilience
    - Except for correlated failures, e.g. CUC power supply, but the obvious of these will also shut down rest of DAQ as well.
- Timing system hardware will be ready for development of other systems and integration and test facility
  - Prototype hardware supplied to test-stands and ITF replaced with pre-production / final boards when available