DEEP UNDERGROUND NEUTRINO EXPERIMENT

Installation and Logistics

Review of the DUNE DAQ conceptual design

UMD Duluth

Alec Habig, UofM Duluth
Tim Durkin, RAL
Monday, December 3, 2018

Science & Technology Facilities Council
Rutherford Appleton Laboratory

Where are we?

- …in the Central Utilities Cavern

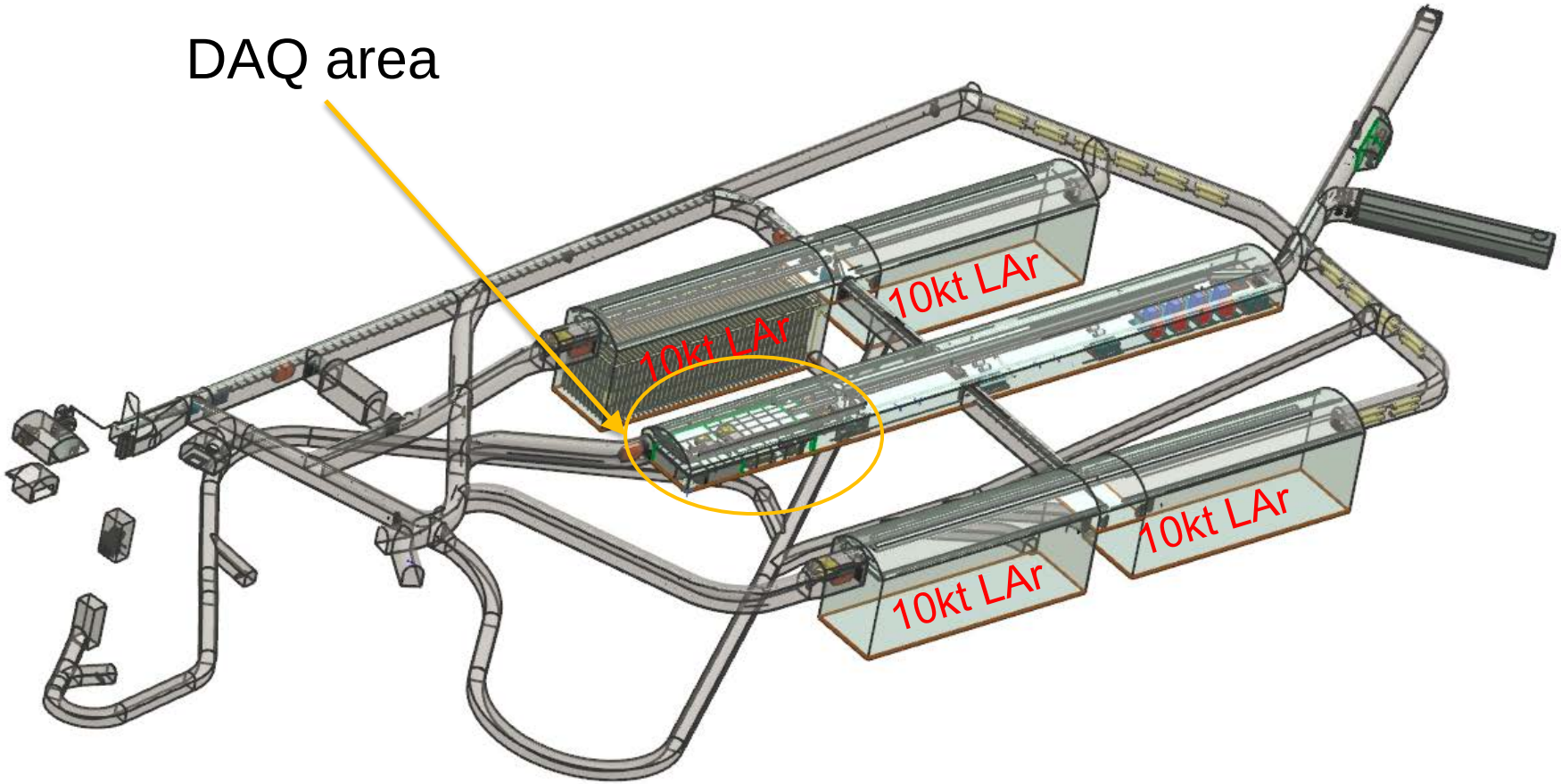

Surface Space

- Also, on the surface at SURF
  - 8 racks, 50kVA is currently the plan
  - Physical space TBD (part of a surface control room)
- Goal for surface space is twofold:
  - Provide control and workspace for people doing DAQ work that can be done over the network to the underground, to minimize people underground
  - Put event building and data logging servers here, at the WAN connection to Fermilab
- Sufficient bandwith is provided by redundant fiber up the two SURF shafts

When are we?

- Beneficial Occupancy of CUC Q2 of 2022
- Hardware physically installed by Q1 of 2023
  - So we’re out of the way as the module #1 parts come in
- Connections to the actual detector installation:
  - Fiber to Cold Electronics on detector top done by Mezzanine install date, Q4 of 2022
  - “DAQ Installed” Q4 2024
  - “DAQ Commissioned” Q4 2025

CUC floorplan

- "Data Acquisition Room" is what often gets referred to as "the CUC"
  - The place where all the data goes to get Acquired
  - Floor plan from the 30% drawings
- Human workspace is at the top of this drawing

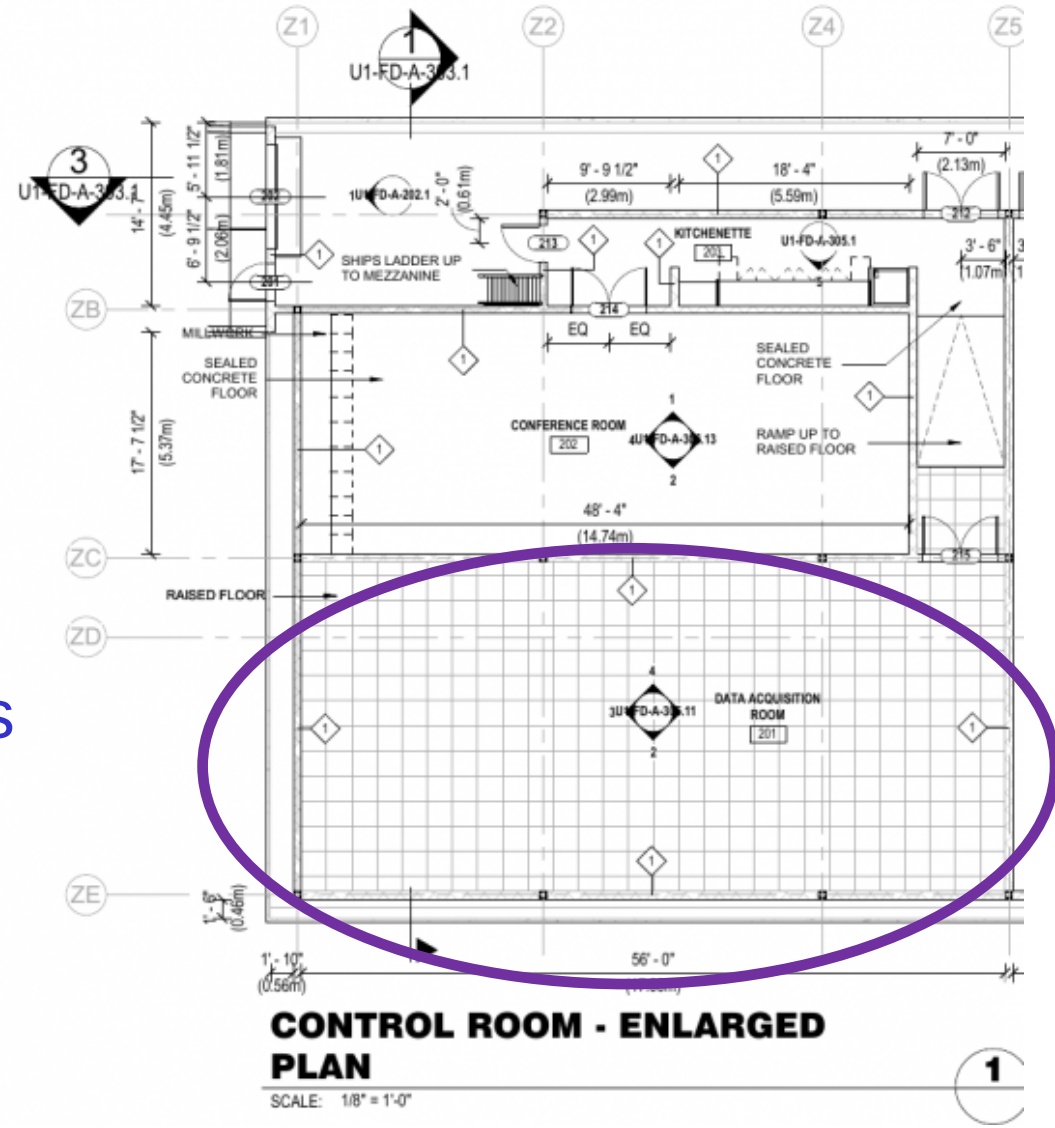

What's in there?

- There is space for 60 racks
  - Nominally 12 DAQ racks per module for 48 total
    - Servers w/ FELIX cards, networking gear, data buffering, DB servers, run control servers
    - All infrastructure go in at the start, to allow us room to install additional compute power if need be as we learn how to optimize
    - By the time we have four modules, things will be optimized
  - 2 CISC server racks
  - 2 Facilities/lab safety racks
  - Floorspace for extra 8 racks is now available after room drawings re-optimized
    - Allows spreading out of systems to better optimize power usage and cable routing
- 500 kVA power and cooling budget
  - Supplied by Technical Coordination

Rack Cooling

- Water cooled racks the same ColdLogik as at ProtoDUNE in the CUC
  - Water under a drop floor. Floor and racks connected to plumbing handed to us by CF by BO of the CUC
  - Rear door of rack exchanges rack air heat with the water
  - Cooling is supplied in the form of chilled water, this design uses it efficiently
  - Protects from common mode cooling failures

ProtoDUNE rack pictures
from Geoff Savage

Rack Cooling

- Water cooled racks the same ColdLogik as at ProtoDUNE in the CUC
  - Water under a drop floor. Floor and racks connected to plumbing handed to us by CF by BO of the CUC
  - Rear door of rack exchanges rack air heat with the water
  - Cooling is supplied in the form of chilled water, this design uses it efficiently
  - Protects from common mode cooling failures

ProtoDUNE rack pictures
from Geoff Savage

Installation Order

- Attention given to all infrastructure items to be used in CUC over the lifetime of the experiment.
- This includes items and systems that may not be used in the initial phase of the experiment.
- This ensures minimal disruption and risk to existing systems during subsequent installations.
  - Common infrastructure installed early in the process

- In Order
  - Grounding Mesh, if required
  - Water Cooling Pipework
  - Water leak detection systems
  - False Floor
  - Overhead Lighting
  - Room Fire Detection
  - Suspended Cable Trays
  - Mains Power Distribution and Testing
  - All 60 Racks installed
  - Heat exchanger doors installed and tested.
  - Hot isle containment doors
  - PDU installation and Testing
  - Optical patch systems
  - Fibers run from Detector to CUC later, during Mezzanine outfitting

Drawing, Schedule

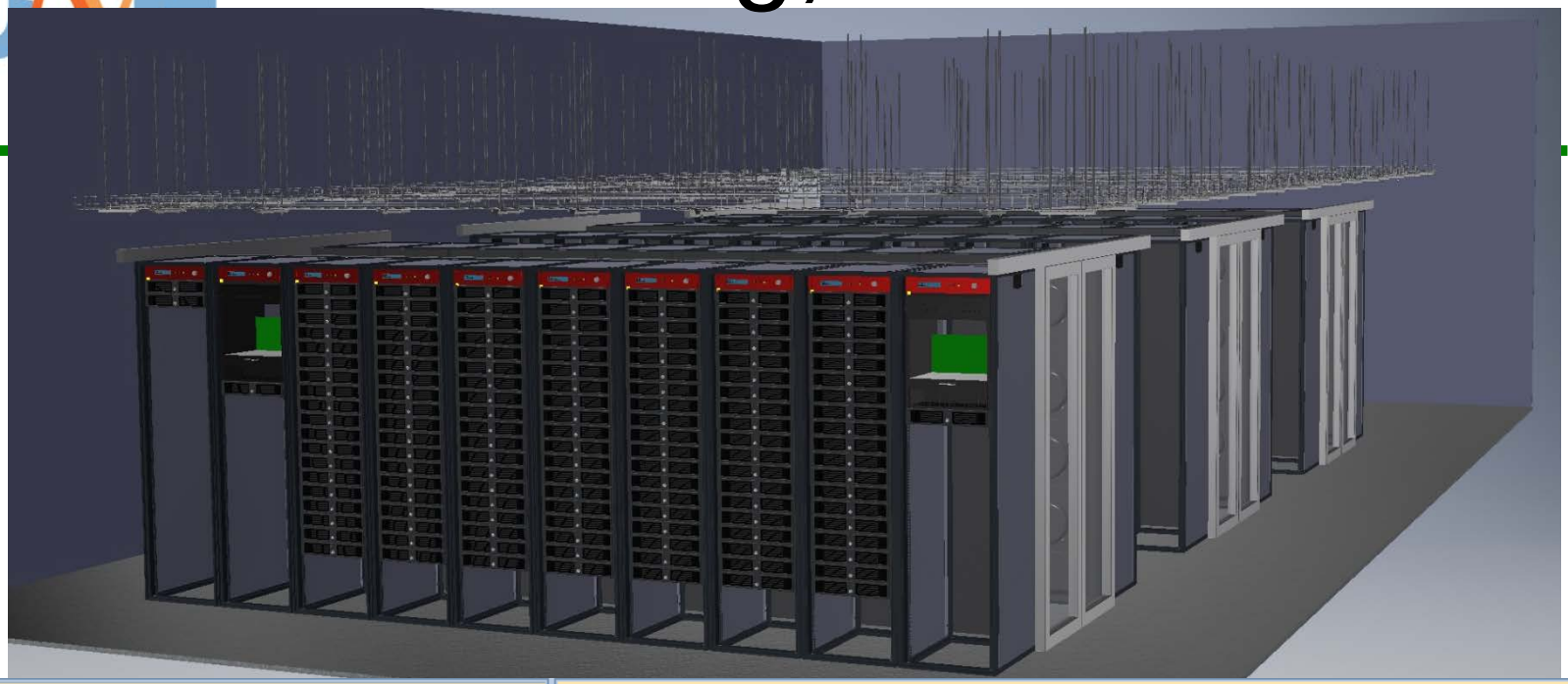

Task	Start	Due	Progress
Grounding Mesh, if required	01/04/2022	07/04/2022	0 %
Water Cooling Pipe work	08/04/2022	21/04/2022	0 %
Water leak detection systems	20/04/2022	25/04/2022	0 %
False Floor	27/04/2022	10/05/2022	0 %
Overhead Lighting	10/05/2022	19/05/2022	0 %
Room Fire Detection	10/05/2022	19/05/2022	0 %
Suspended Cable Trays	20/05/2022	27/05/2022	0 %
Mains Power Distribution and Testing	30/05/2022	08/06/2022	0 %
All 60 Racks installed	09/06/2022	30/06/2022	0 %
Heat exchanger doors installed and te...	09/06/2022	06/07/2022	0 %
Hot isle containment doors	16/06/2022	06/07/2022	0 %
PDU installation and Testing	09/06/2022	06/07/2022	0 %
Optical patch systems	06/07/2022	12/07/2022	0 %

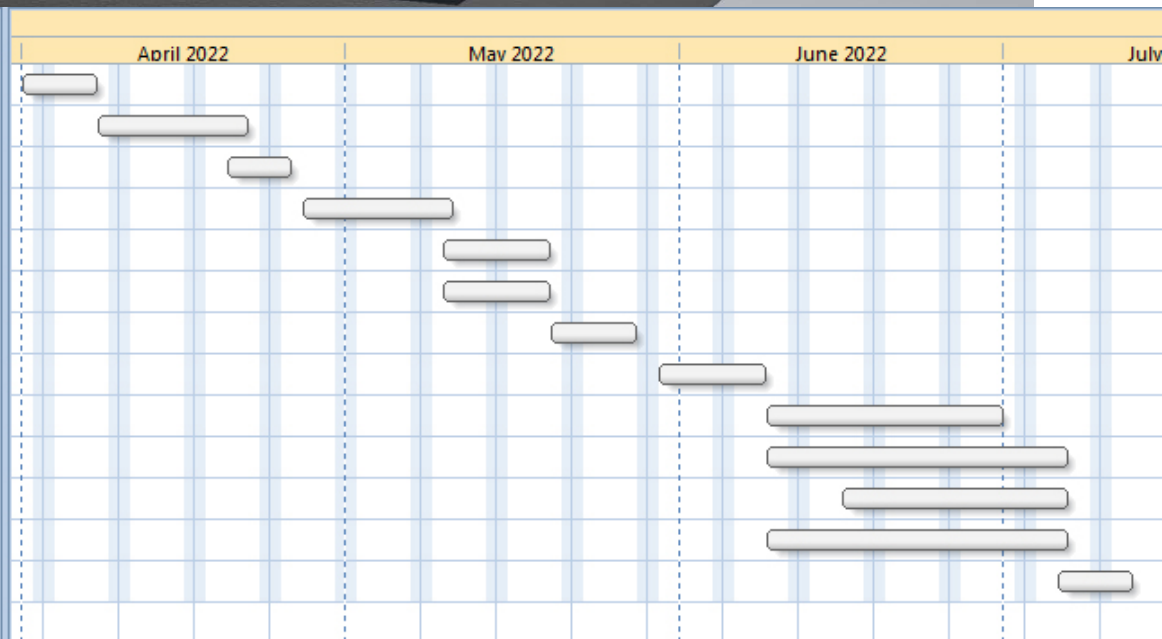

Installation Safety

Systematic Safety

- Risk assessments and method statements to be completed by those undertaking the work elements. Reviewed by experts drawn from collaboration and hosting laboratory.
- Access control to the pit, registering in and out times, Electronic, physical tag or paper.
- Training, evacuation, use of oxygen generator.
- Surface communication points, Telephones.
- Surface manager- point of contact for all those in experimental areas.

Personal Protection

- PPE
  - Hard Hat
  - Eye protection
  - Ear Protection
  - Boots
  - Personal Alarm (whistle or electronic)
  - Gloves
  - Hi Vis clothing
  - Buddy system
  - Oxygen generating rescue masks?

Logistics

- Shipping from vendors and consortium institutions all goes to Integration Test Facility (ITF) in Rapid City
  - Moved from there to SURF by DUNE's own logistics team
- DAQ will have only a small test stand at ITF to help test APAs
  - Our own installation, burn-in integration happens before shipping to ITF
  - Final testing underground
    - Human presence minimized, much work done over the network

ITF

- DAQ items are in the schedule for ITF receiving, so it will all be ready to go underground at CUC Beneficial Occupancy

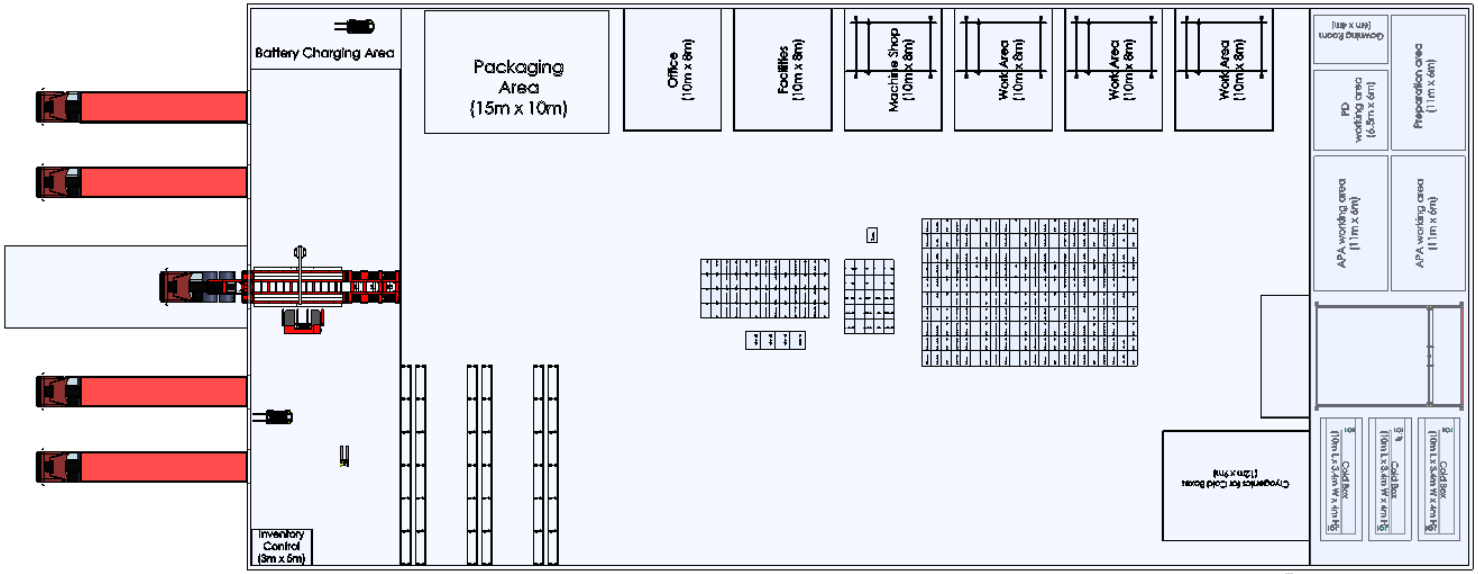

Drawings of where to stage the CUC-bound material from Manhong Zhao (Physics Department, BNL) 10/03/2018 installation meeting

ITF

- DAQ will take the warehouse floor space for racks and server boxes for a short time as they are staged to the shaft

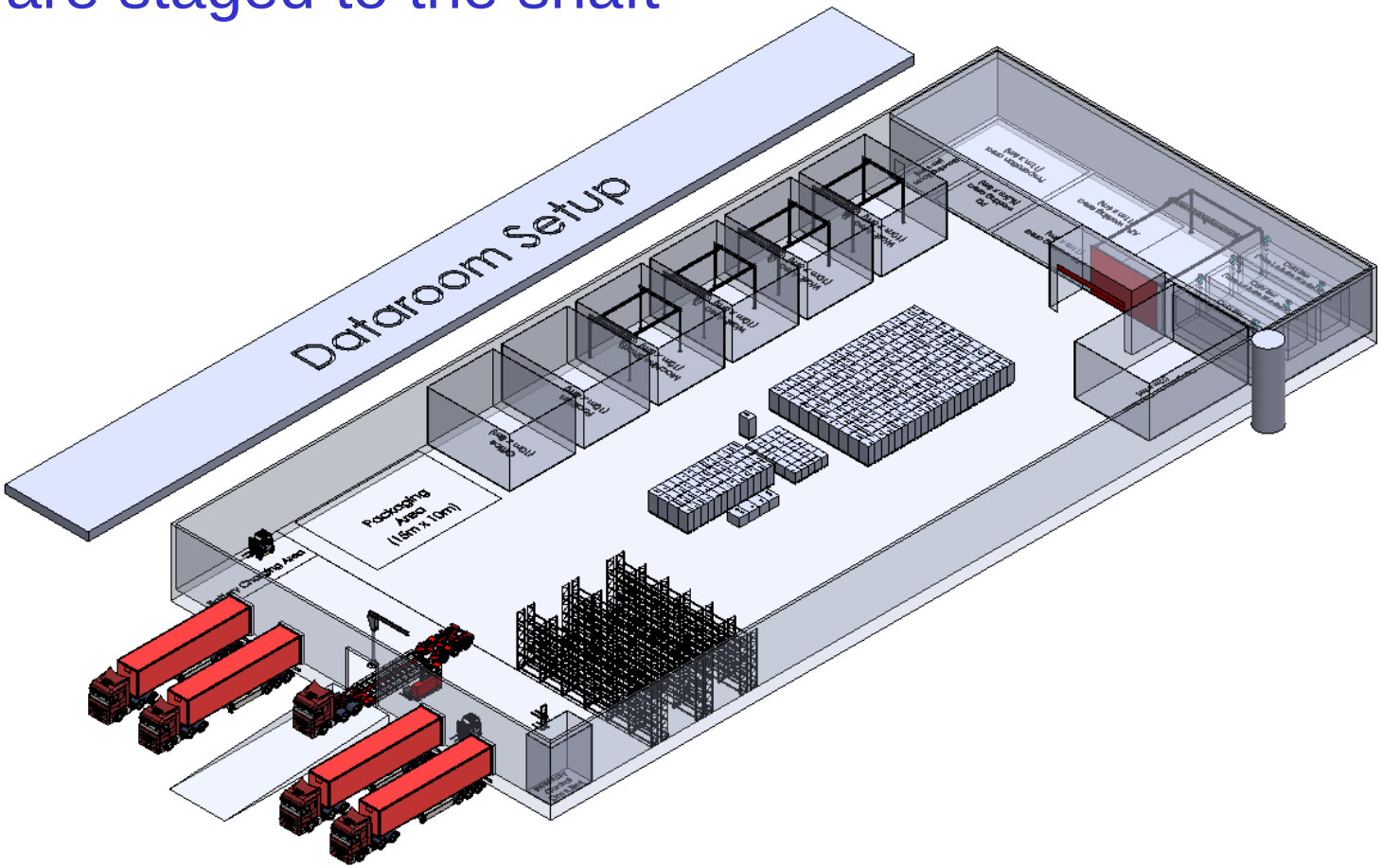

Loads down shaft

- Installation group is keeping track of how many of what sort of thing goes down the Ross Shaft when….
  - DAQ provides updates as designs converge

DUNE Loads					Package Dimensions			Package Dimensions							
Description	Total Number of Units	Weight per unit	Units per package	Type of package	Width	Height	Length	Width	Height	Length	Package weight	Number of packages per trip	Type of trip	Number of Hoist Trips	Comment
		kg			m	m	m	in	in	in	kg			ea.	
Workstations for data room	5	25	5	Stk pallet box	1.2	2	0.8	47	79	31	100	1	Cage	1	Assume around 5 workstations
Dataroom Racks	52	100	1	Pallet	0.8	2	1.2	31	79	47	100	4	Cage	13	52 racks total each rack on a pallet and 3 palle the cage
Data Room Rack AC cable	5	40	2	Pallet	1.2	1	0.8	47	39	31	80	3	Cage	2	Assume the average cable run is 15m and 52 r are needed for 800m of cable. A spool will hol ft or 150m. Roughly 5 spools are needed.
Misc Power distribution	1			Stk pallet box	1.2	3	0.8	47	118	31			Cage	1	Breaker boxes, receptacles, fittings etc If stack pallet boxes are used assume this all fits in on cage. This is 6 boxes at nearly 1 m^3 each.
AC contractor toolboxes					1.4	1	3	55	39	118			Cage	2	Assume the contactor for the electrical work in data room will bring down toolboxes
CUC dataroom Cooling Piping	100	2.5	100	Crate	1	1	3.5	39	39	138	250	1	Cage	1	Assume the length of pipe is roughly twice the length of the cable trays as both feed and retu needed or 1000ft. The pipe will come in 10 foo lengths or 3.05m. The number of pipes is then roughly 100.
Misc. Pipe fittings CUC cooling	3	500	1	Pallet	1.2	1	0.8	47	39	31	500	3	Cage	1	Guess that 3 pallets of pipe fittings will be sufficient
CUC pipe installation tool chests	2	300	1	Crate	1.4	1	3	55	39	118	300	1	Cage	2	Assume that contractors will bring their own to chests. Guess that two cage trips will cover tw very large tool boxes and misc small parts.

Summary

- DAQ hardware is all either COTS {servers, racks, routers} delivered straight to ITF, or FELIX servers tested and burned in at CERN
  - Staged in ITF, ready to go underground at CUC BO
- Infrastructure {plumbing, power} installed by contractors starting at BO
- Hardware physically installed by consortium, configured and tested remotely
  - Infrastructure for all four modules goes in at start, to allow us headroom to optimize system using initial modules