Transportation analysis of PIP-II 650 MHz cryomodule

Dr. Sergey Cheban

650 MHz Cryomodule Design Advisory Meeting

23 Oct 2018

Strong back

- Aluminum 6061 T6

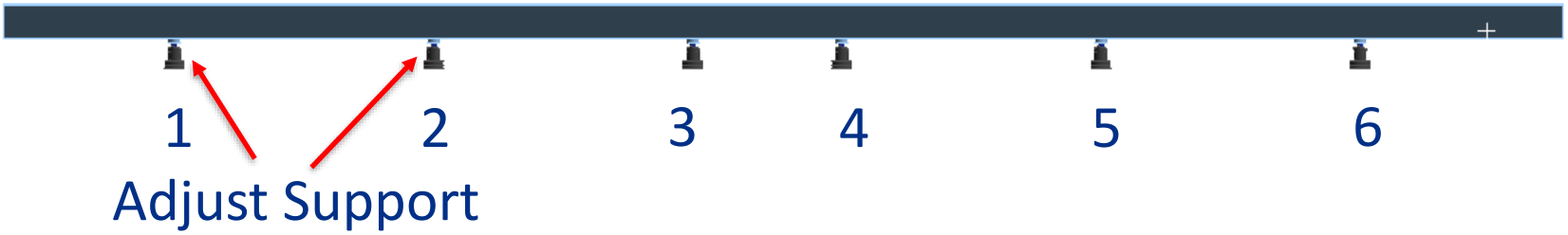

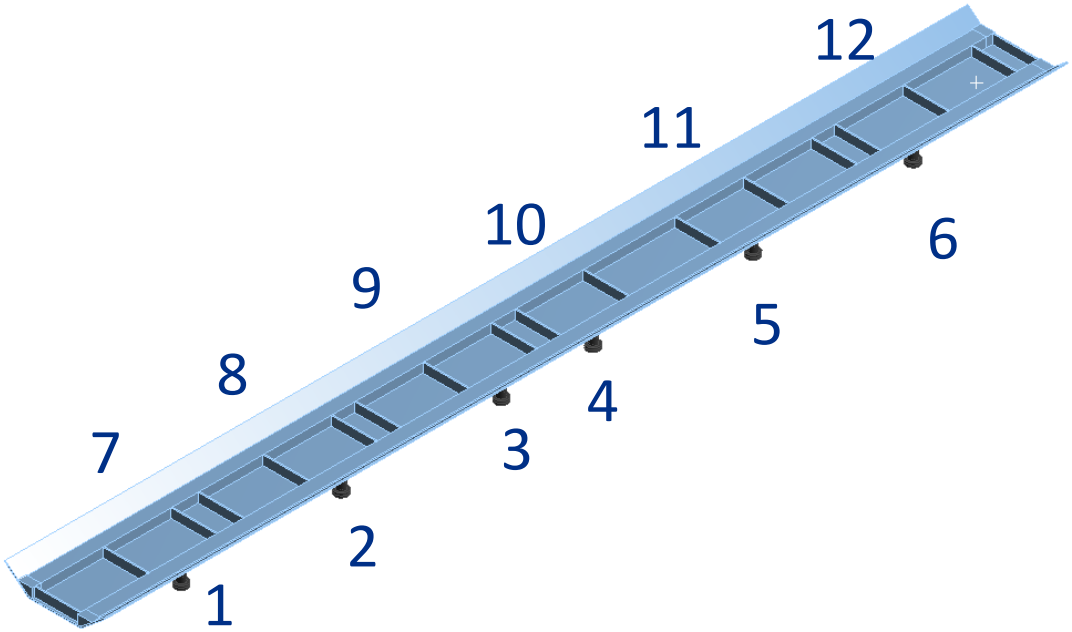

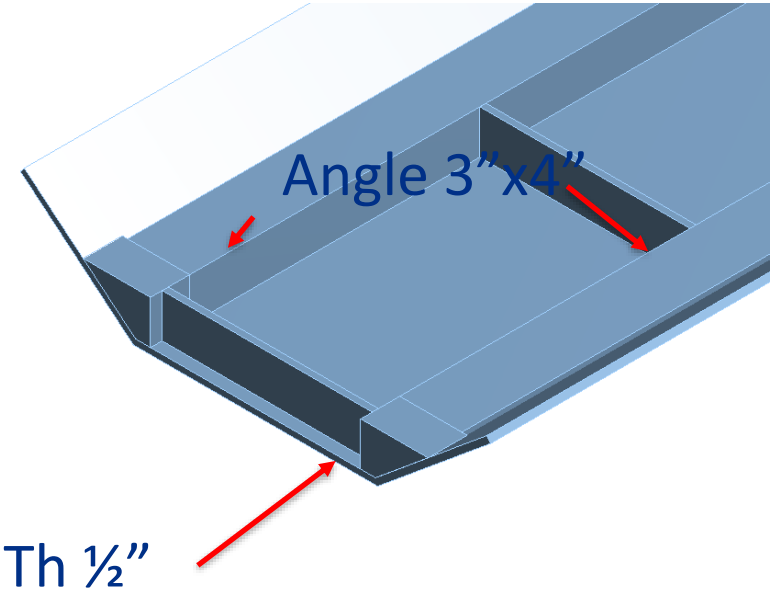

Adjust Supports

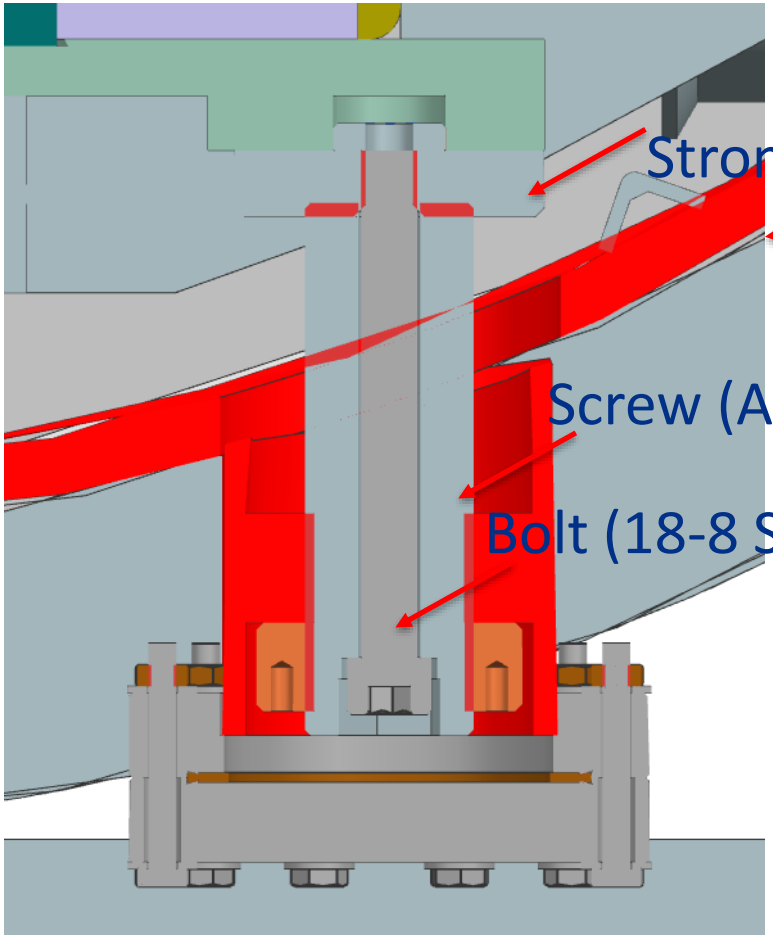

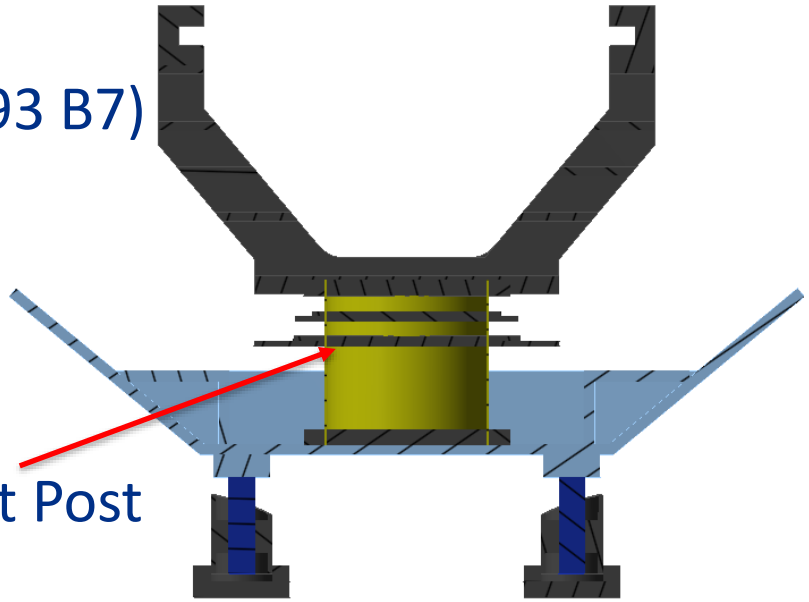

Support Post

35-50K intercept

5K intercept

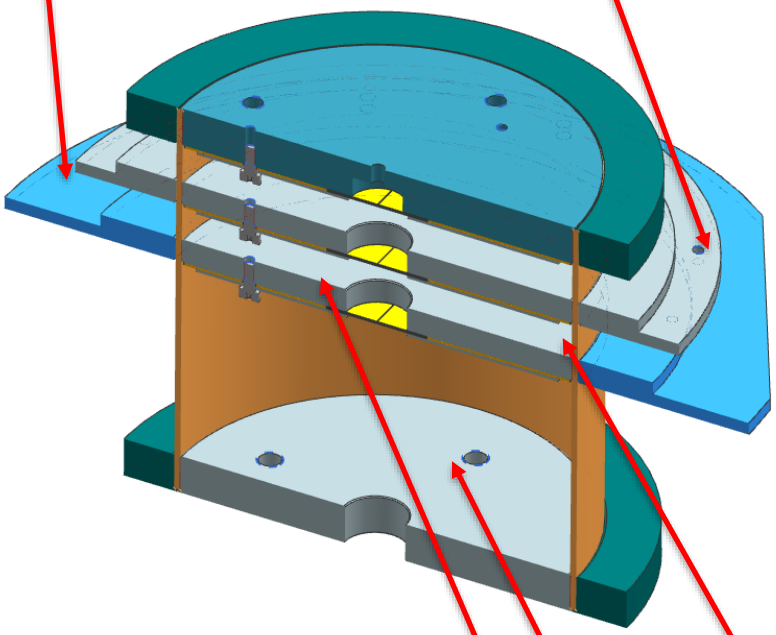

Support for dressed cavity

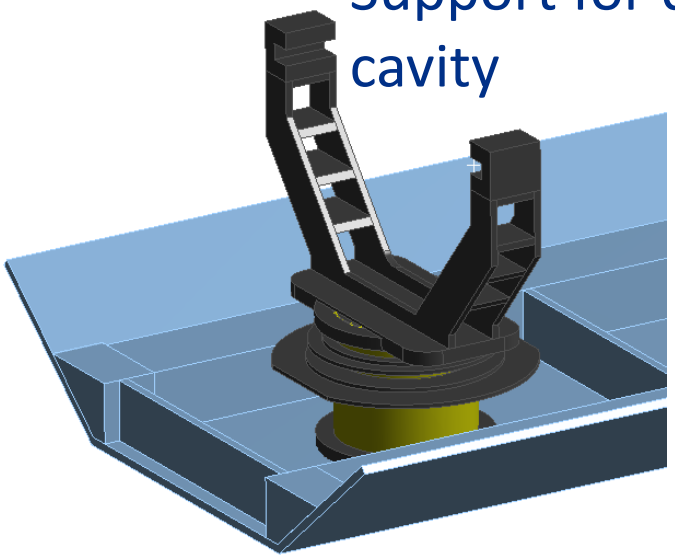

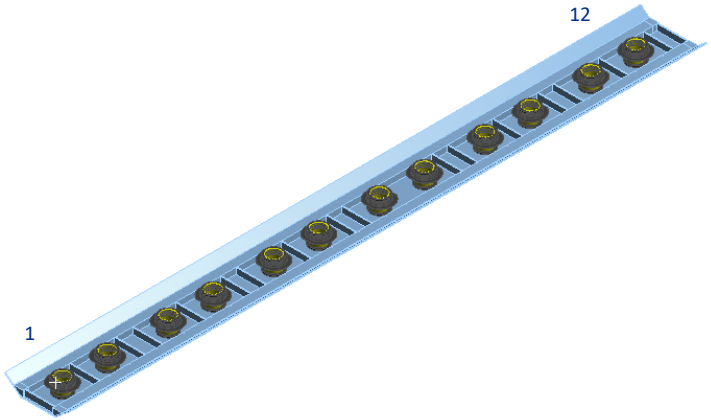

35-50K Disk (AL 6061)

2K Disk (SS 316L)

Tube, 200mm OD, 194 ID (G11)

String Assembly

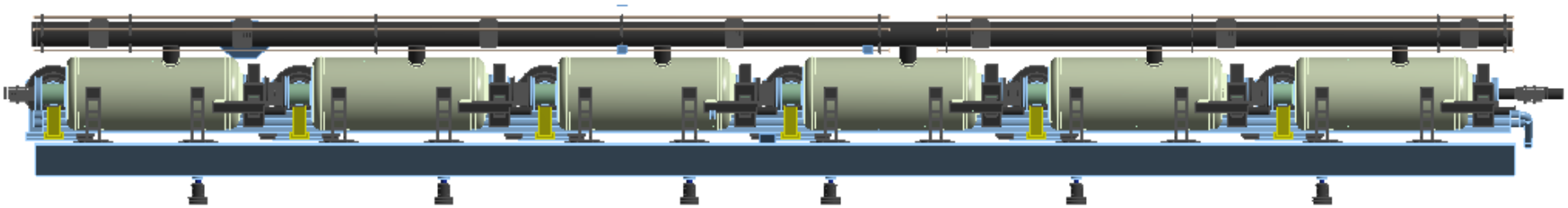

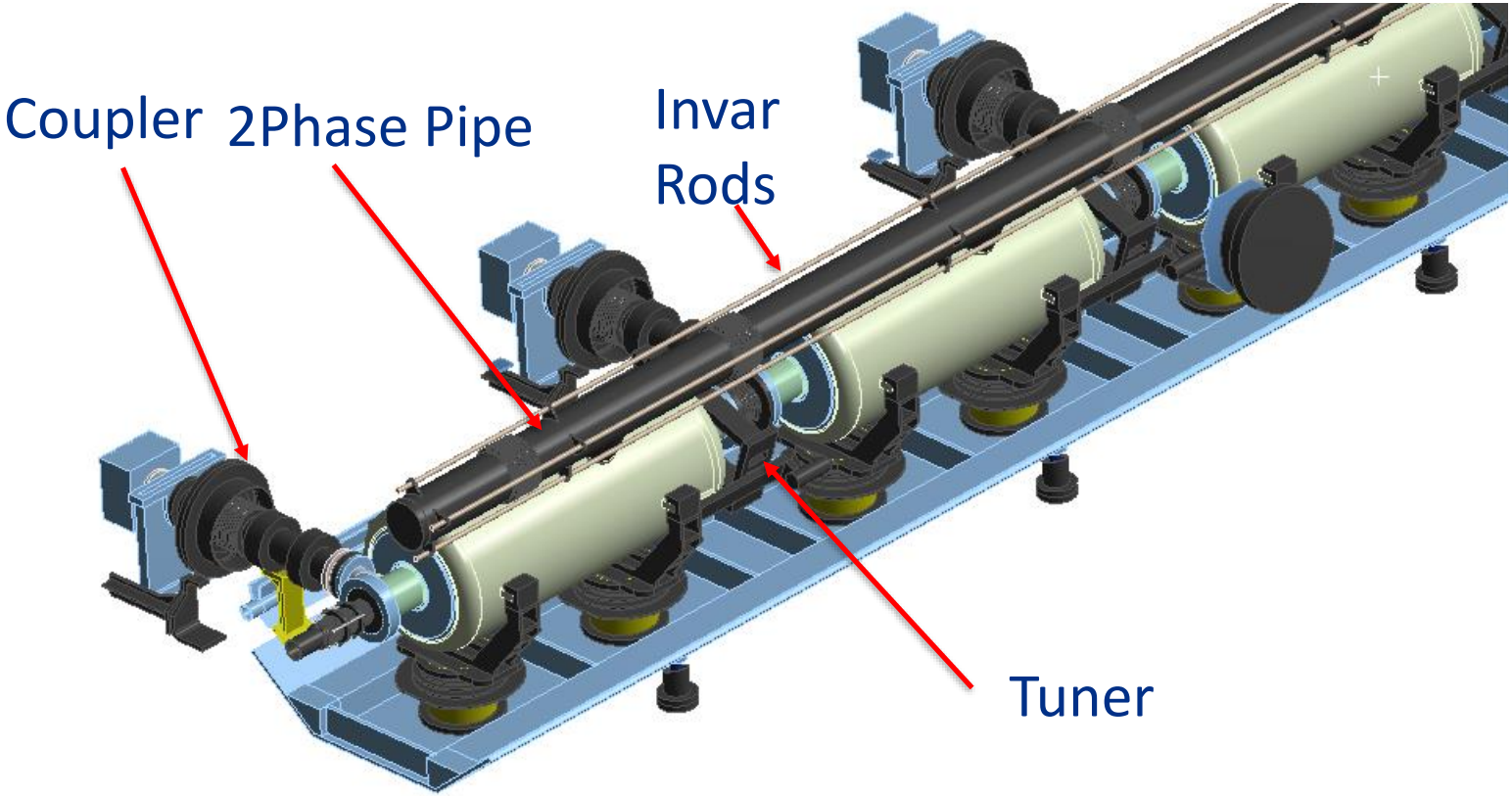

Coupler, Tuner (CAD)

Coupler

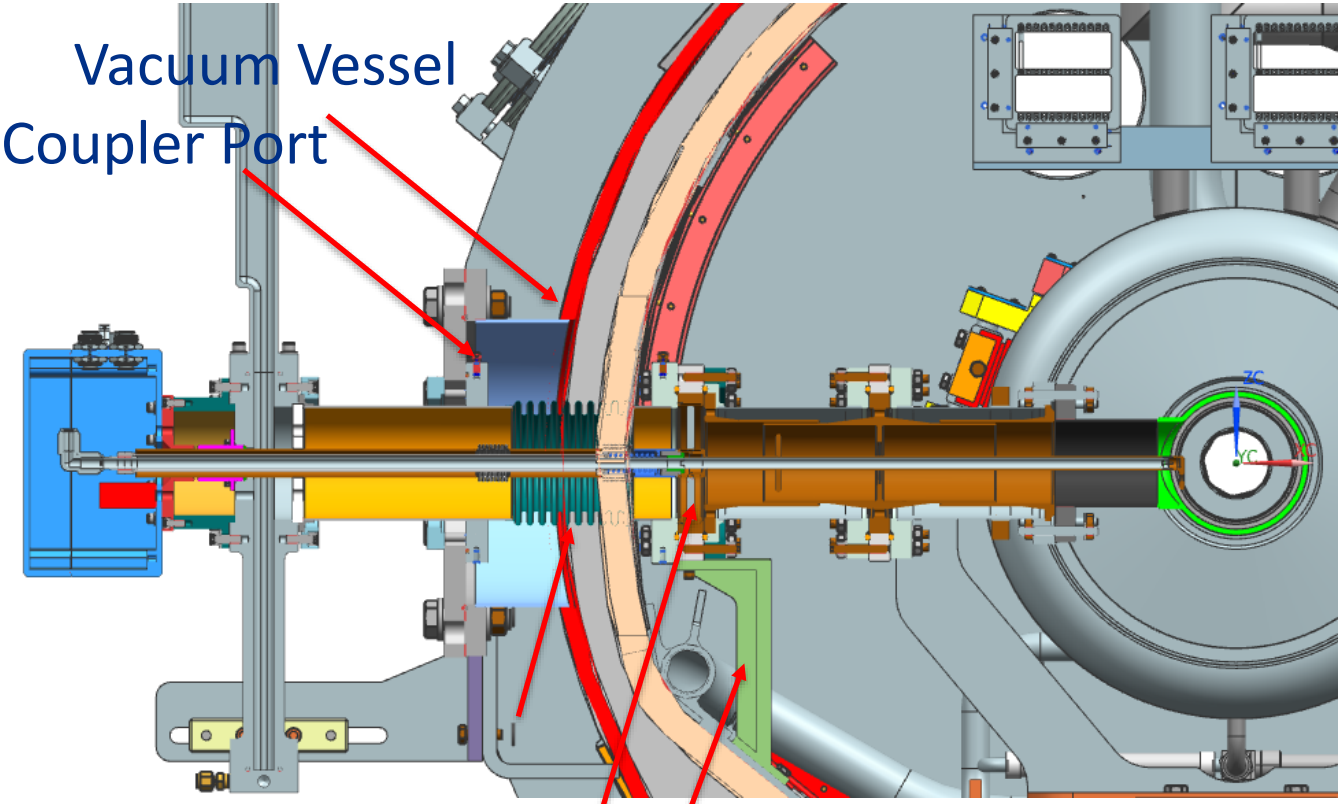

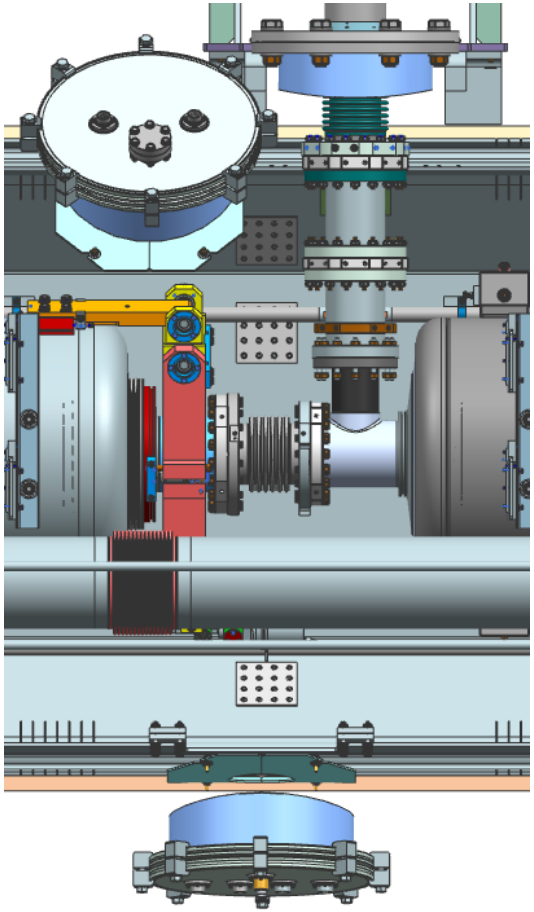

Tuner

Coupler, Tuner (FEM)

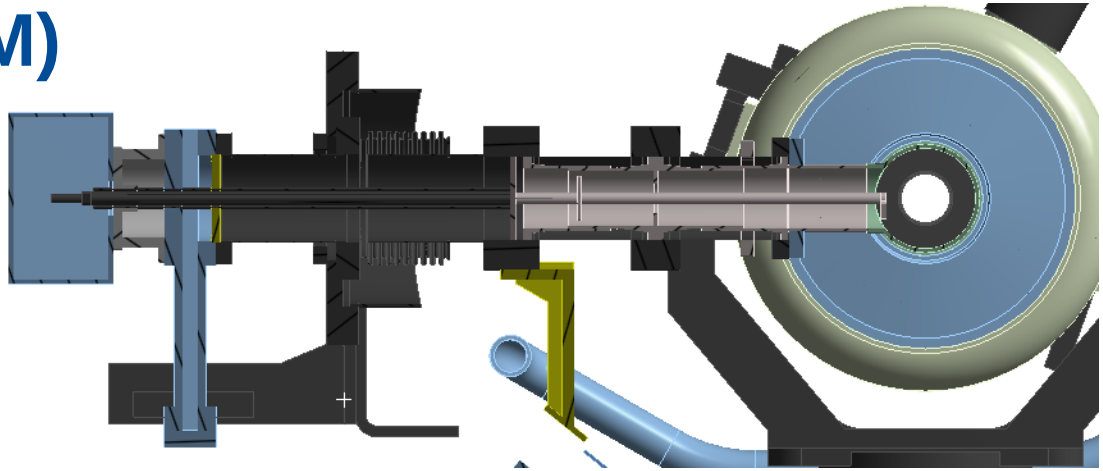

Coupler

Needle Support

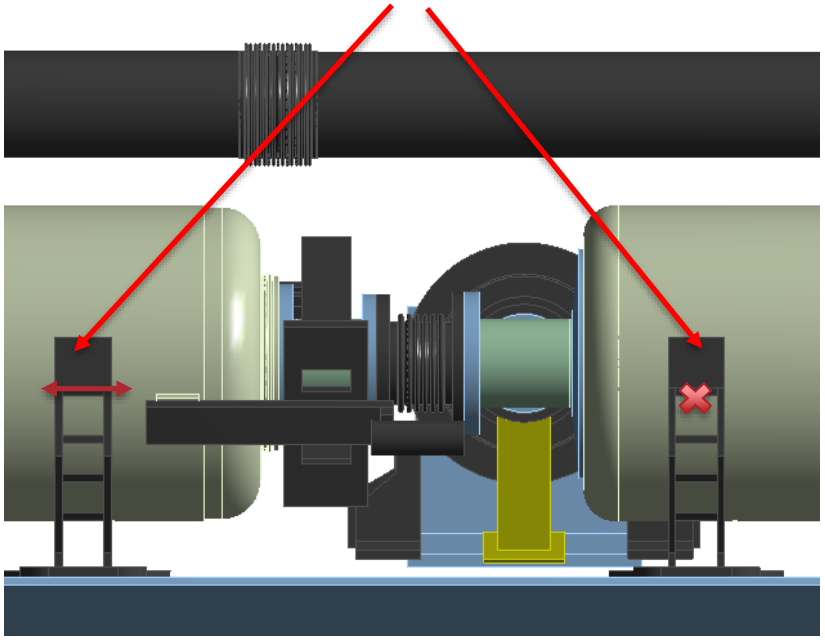

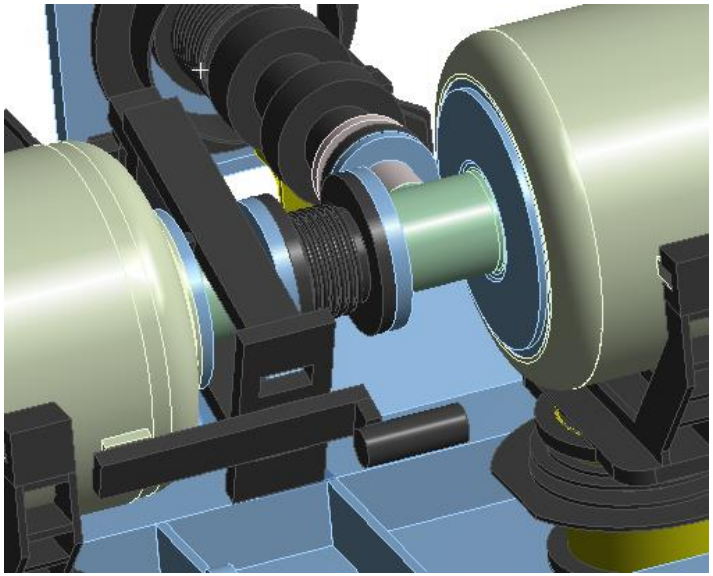

Tuner

Thermal Shield

- Aluminum 1100

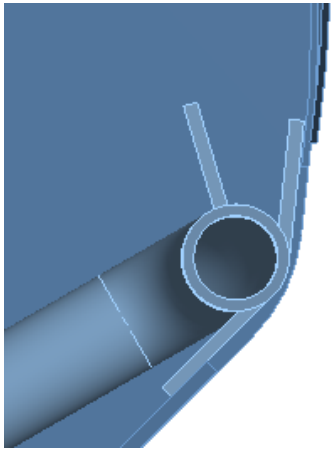

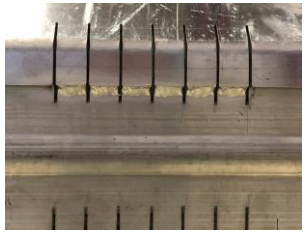

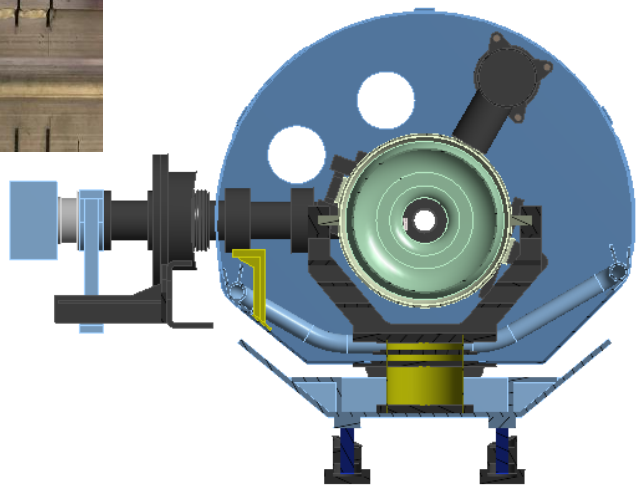

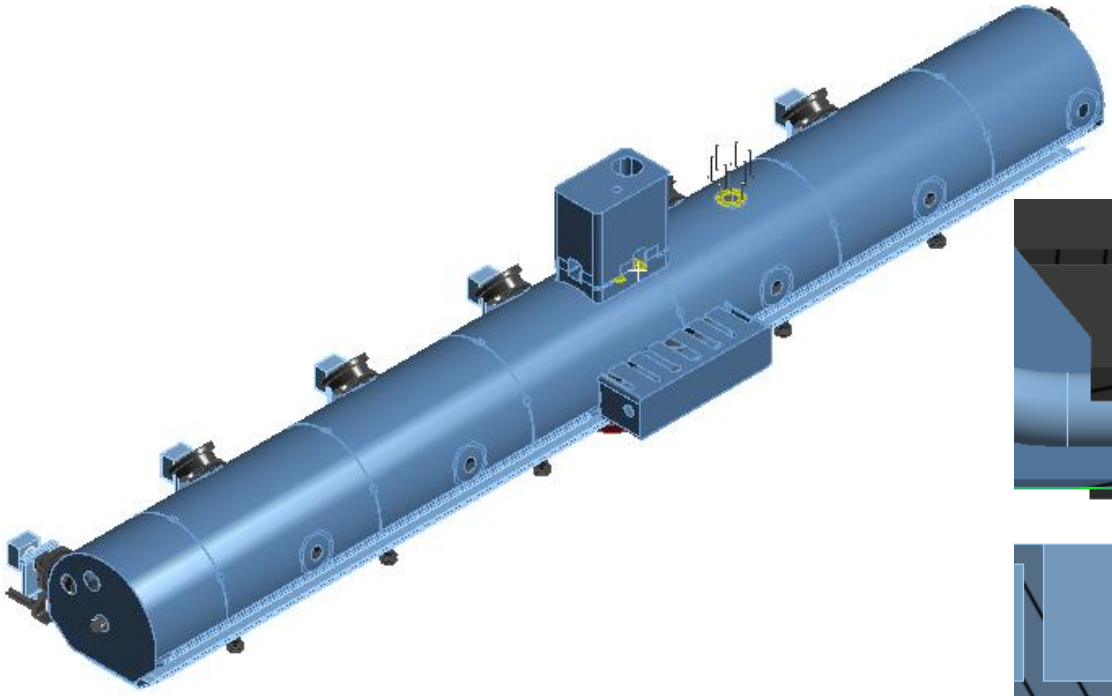

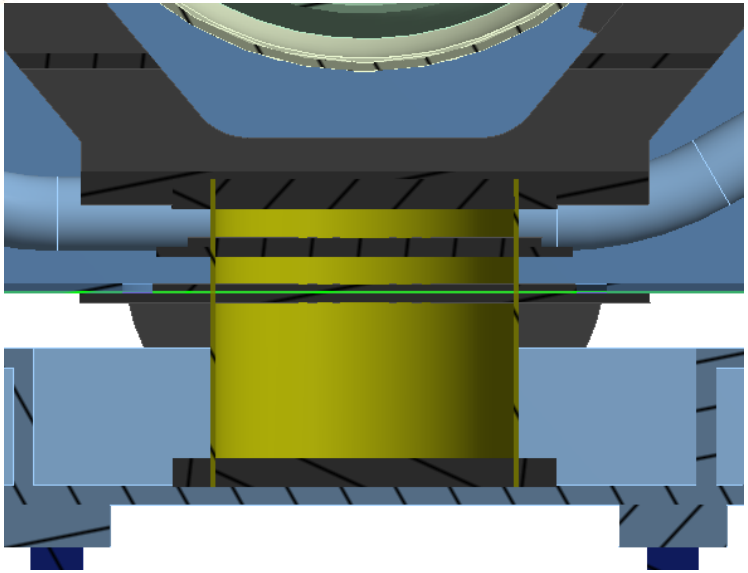

Vacuum Vessel

ASTM A516 Steel, Grade 70; OD=1219.2mm; ID=1193.8mm

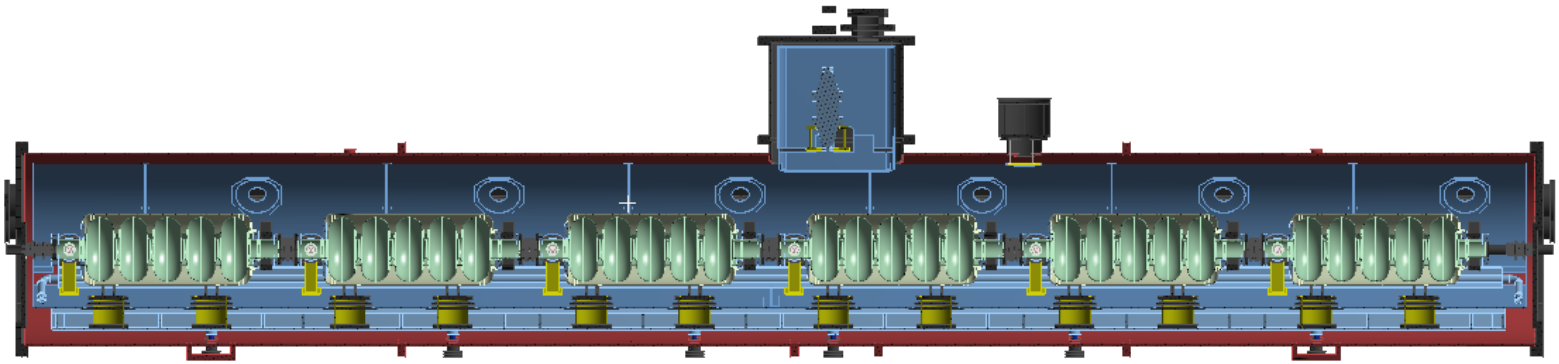

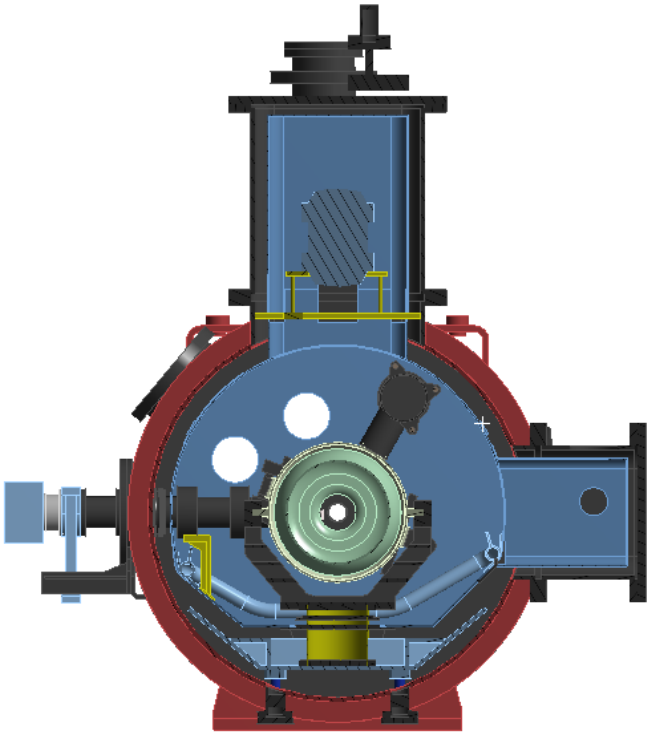

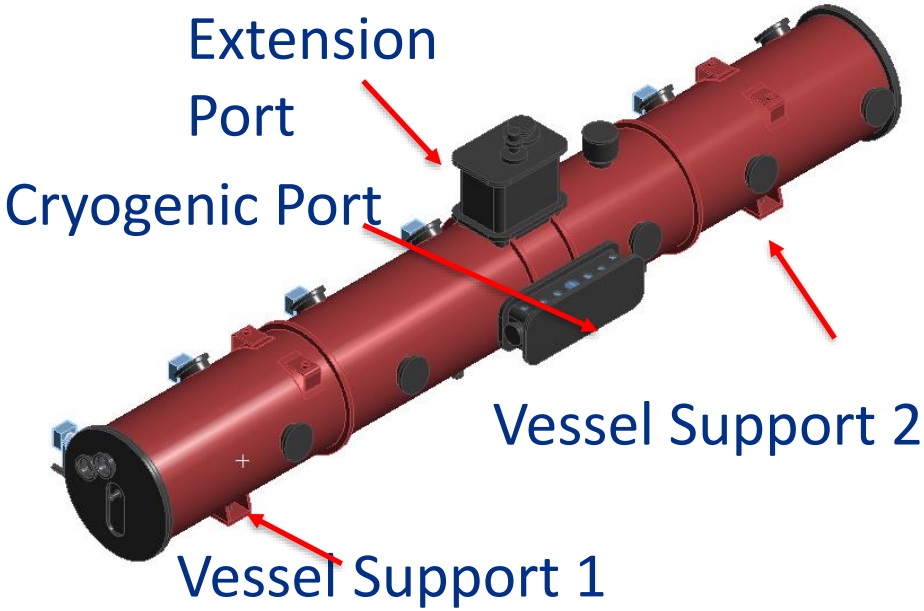

Results

Static Structural

		Max Equivalent Stress			
		Axial 5G, MPa	Transvers 1.5G, Mpa	Vertical 3G, Mpa	Tensile Strength, Mpa
Vessel	ASTM A516 Steel Gr70	144	182	144	260
Thermal Shield	Aluminum 1100	38	30	45	150
2Phase Pipe	316SS	184	108	163	210
Strong Back	Aluminum 6061 T6	27	23	13	255
Support Post	G-11	29	34	12	255 (crosswise)
					296(lengthwise)
					151(shear strength)
Adjust Support	ASTM A193 B7/ 18-8 SS	140	128	49	210

Modal

Mode	Frequency [Hz]
1	11.317
2	12.934
3	18.229
4	20.626
5	21.186
6	21.305
7	22.649
8	23.426
9	24.907

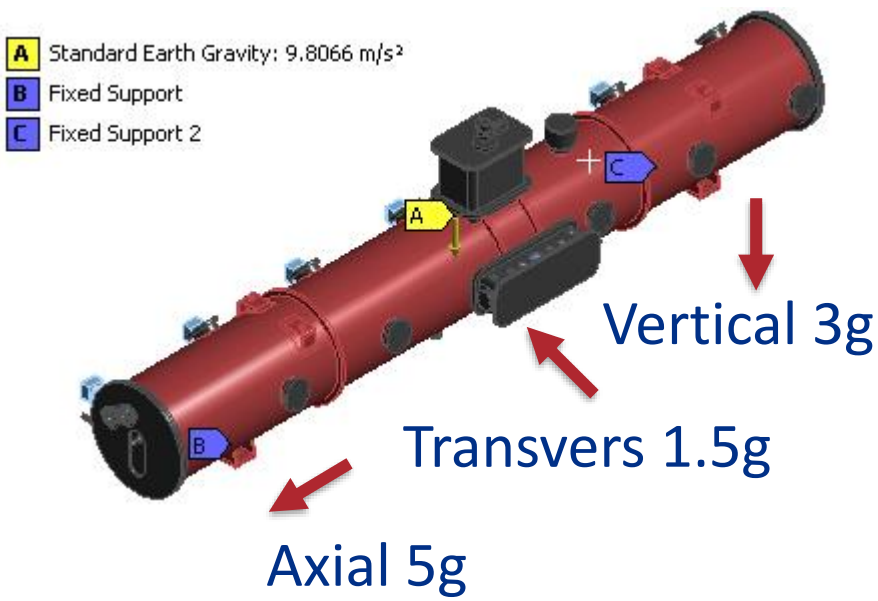

Total Deformation (Vertical 3G)

- Max 3.3mm at CryoPort thermal shield

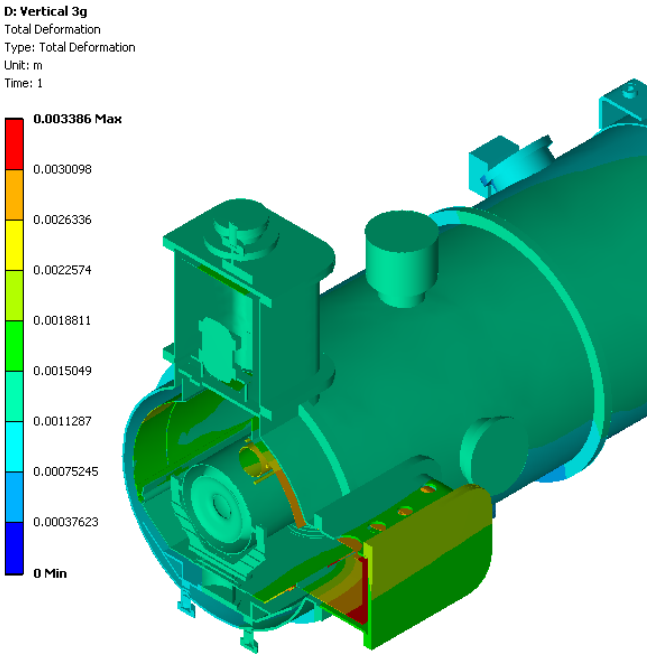

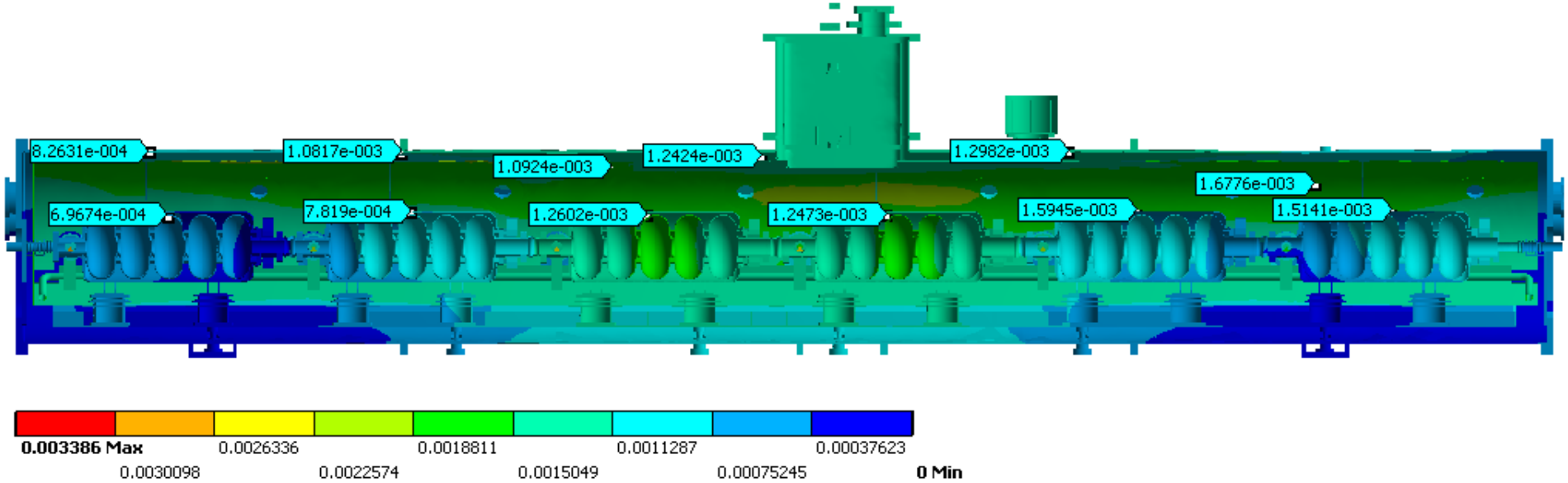

Equivalent Stress (Vertical 3G)

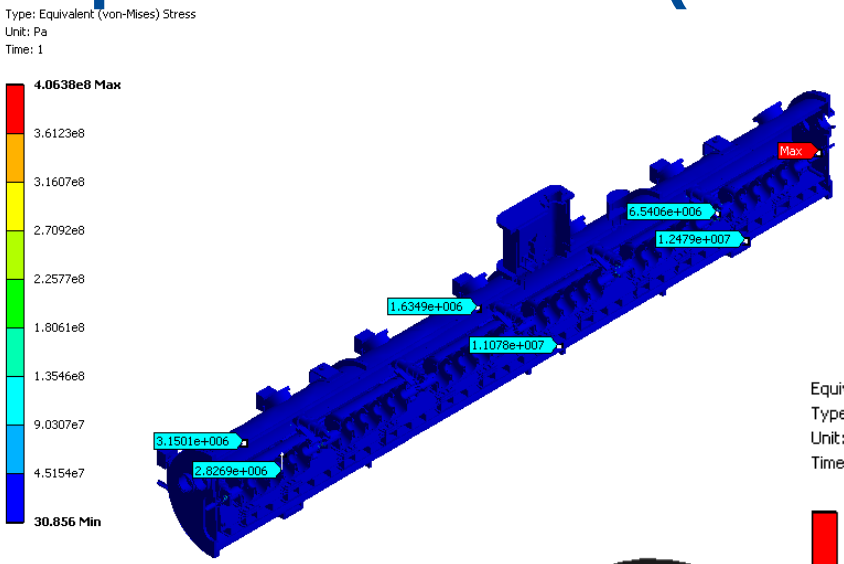

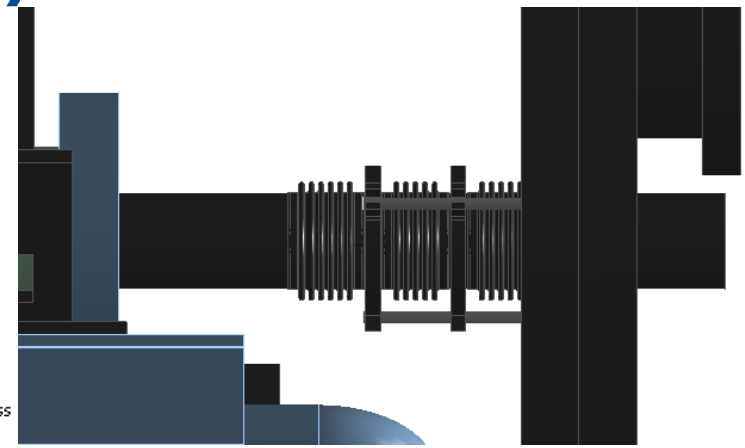

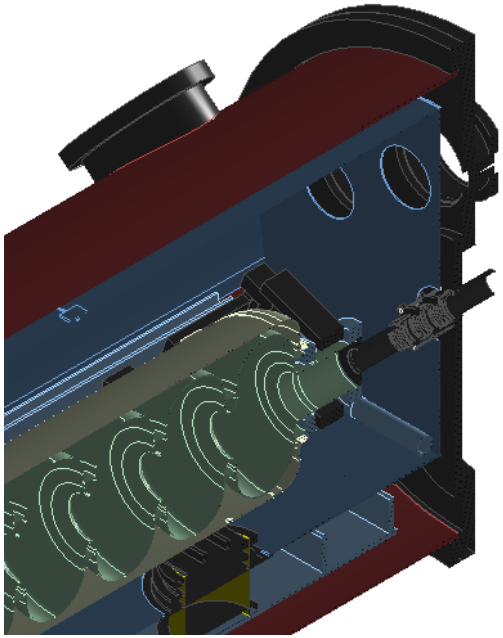

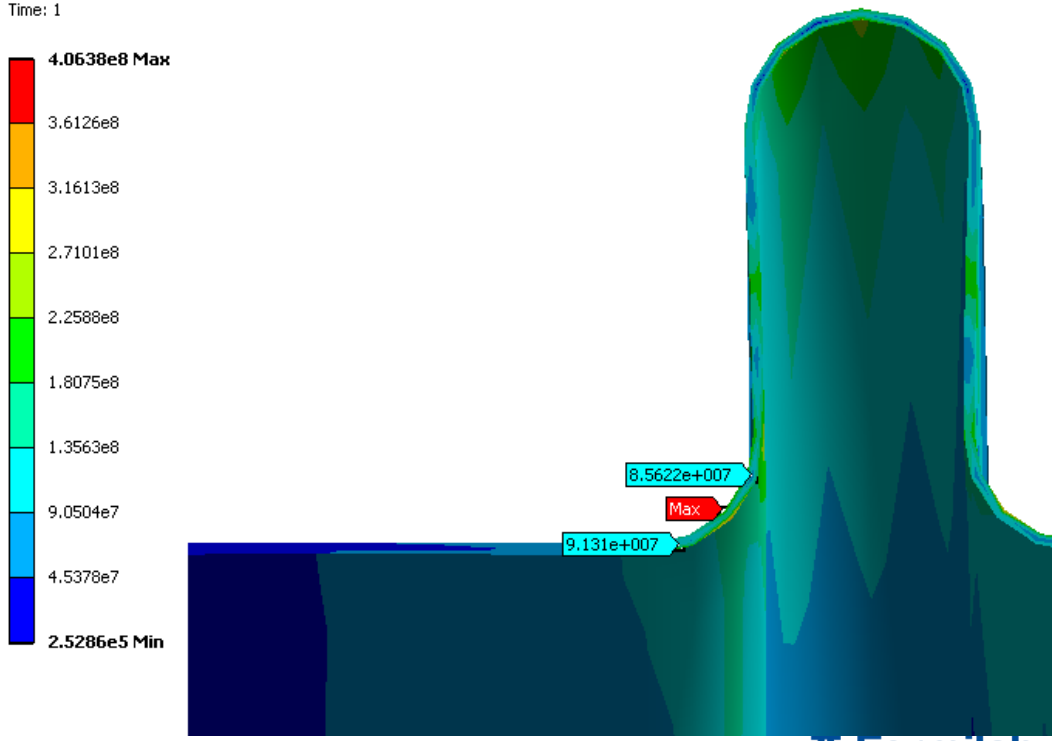

Equivalent Stress (Vertical 3G)

Vessel

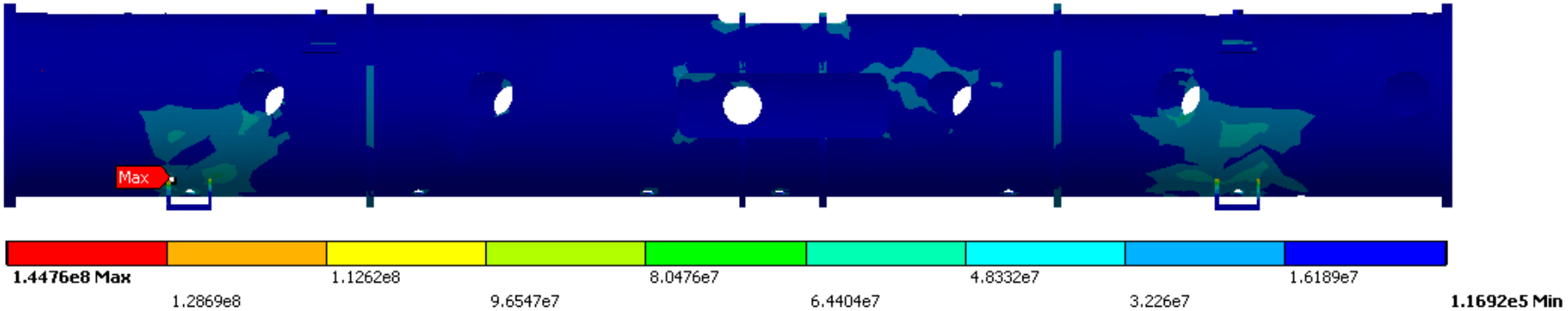

Thermal Shield

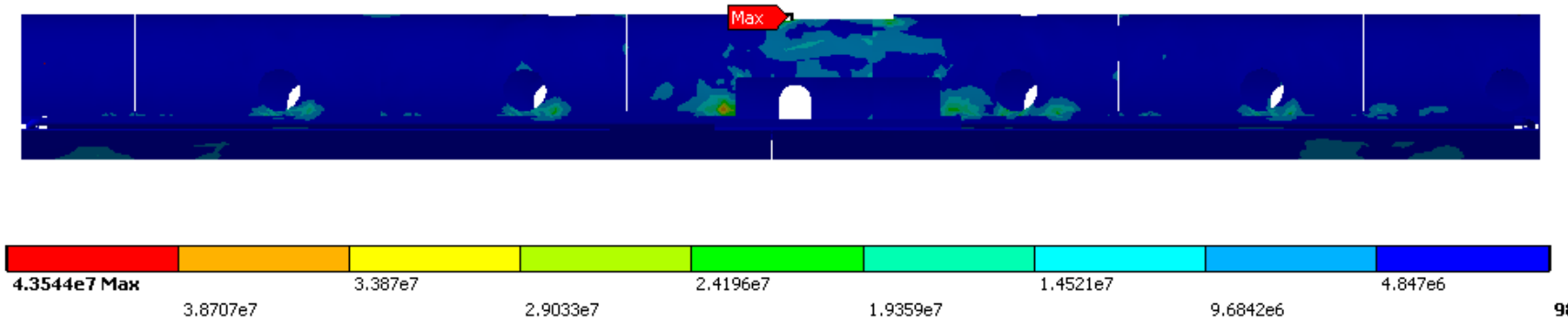

2Phase Pipe

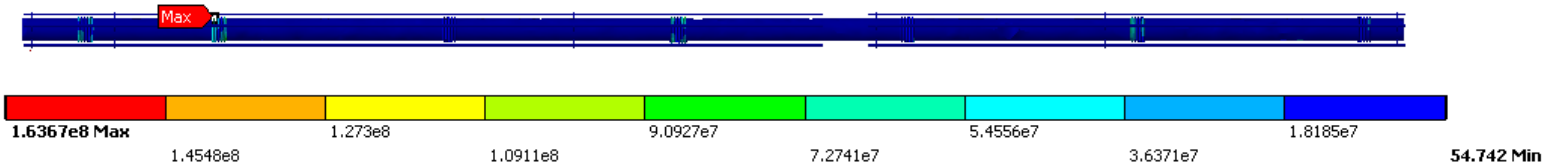

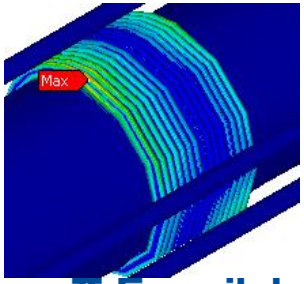

Equivalent Stress (Vertical 3G)

Strong Back

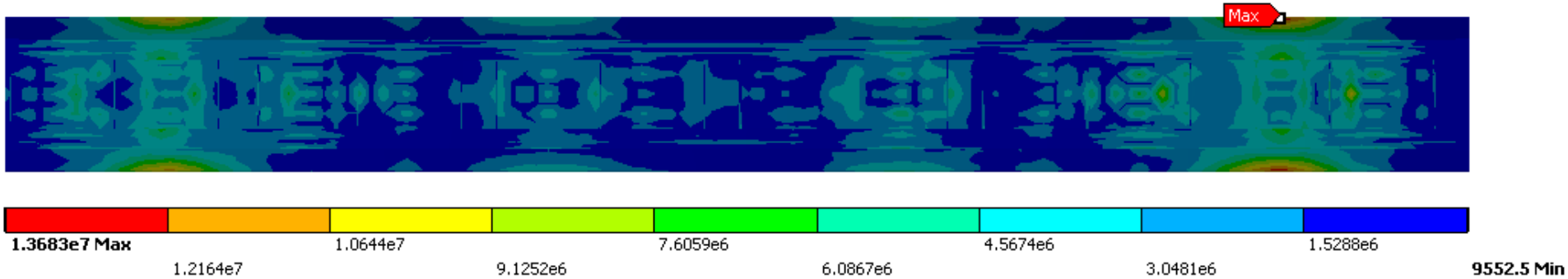

Support Post

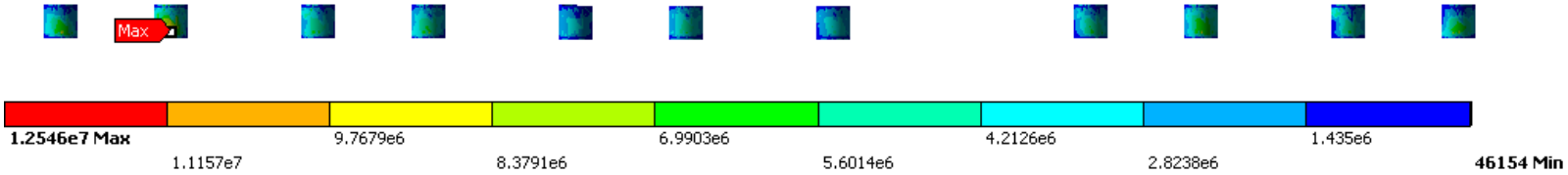

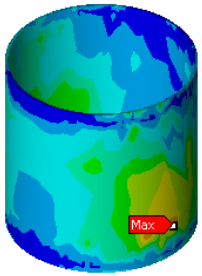

Adjust Support

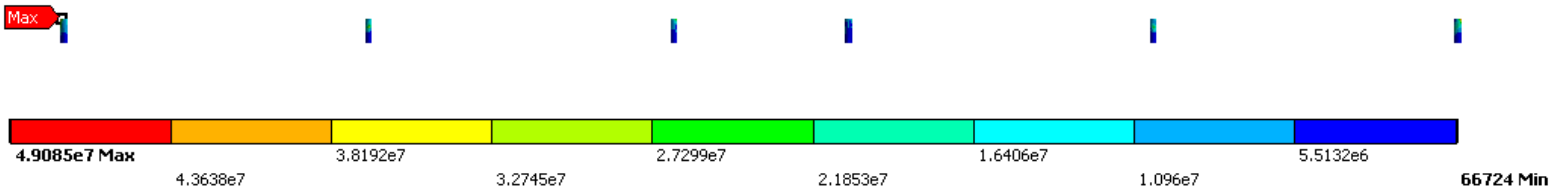

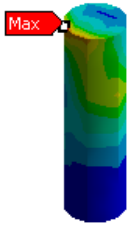

Bellows(Vertical 3G)

Coupler Bellow

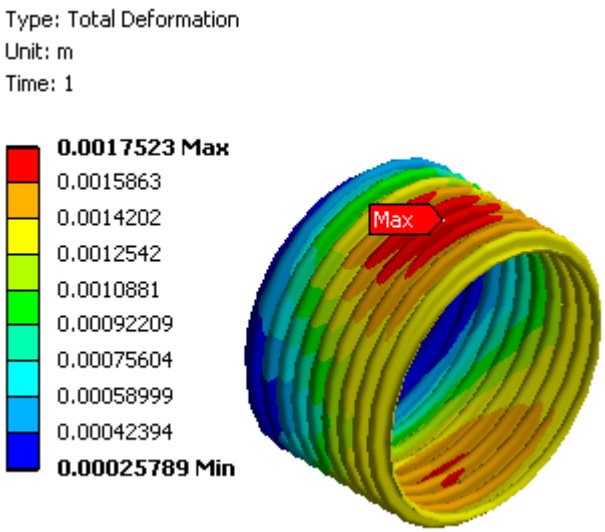

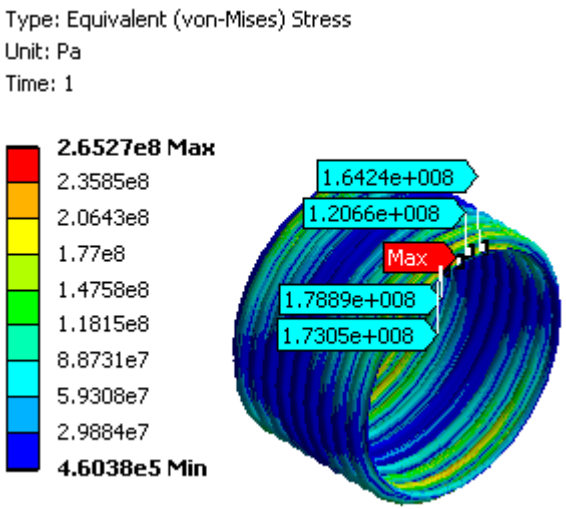

Beam Pipe Bellows

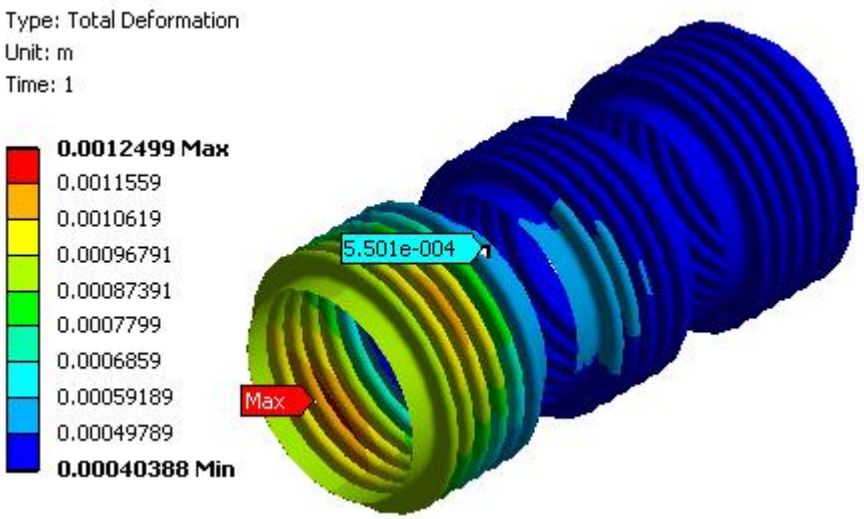

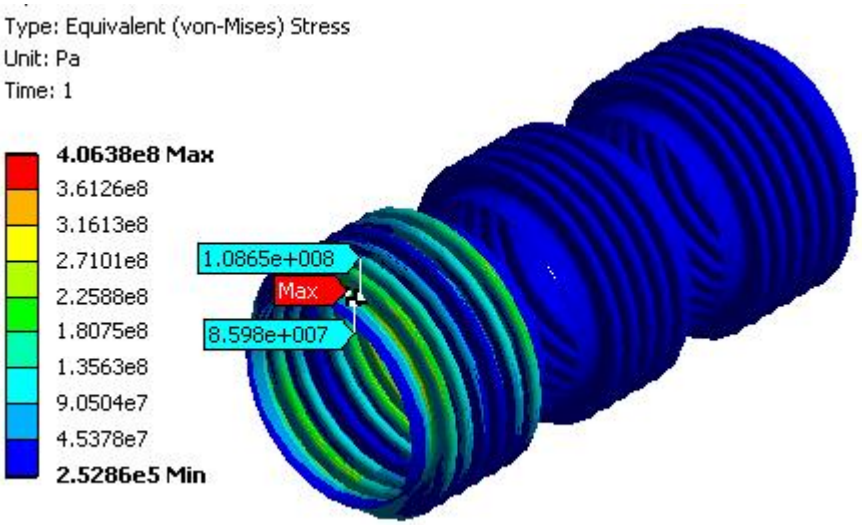

Total Deformation(Transvers1.5G)

- Max 5.4mm at top of extension port

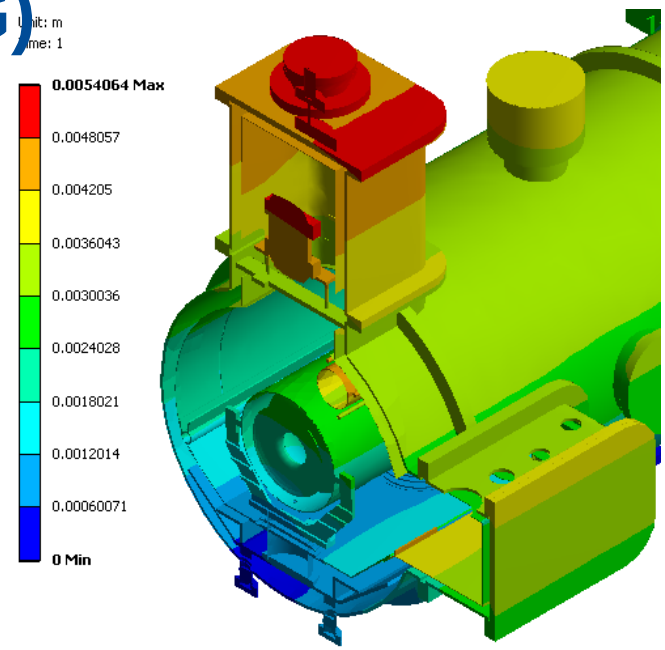

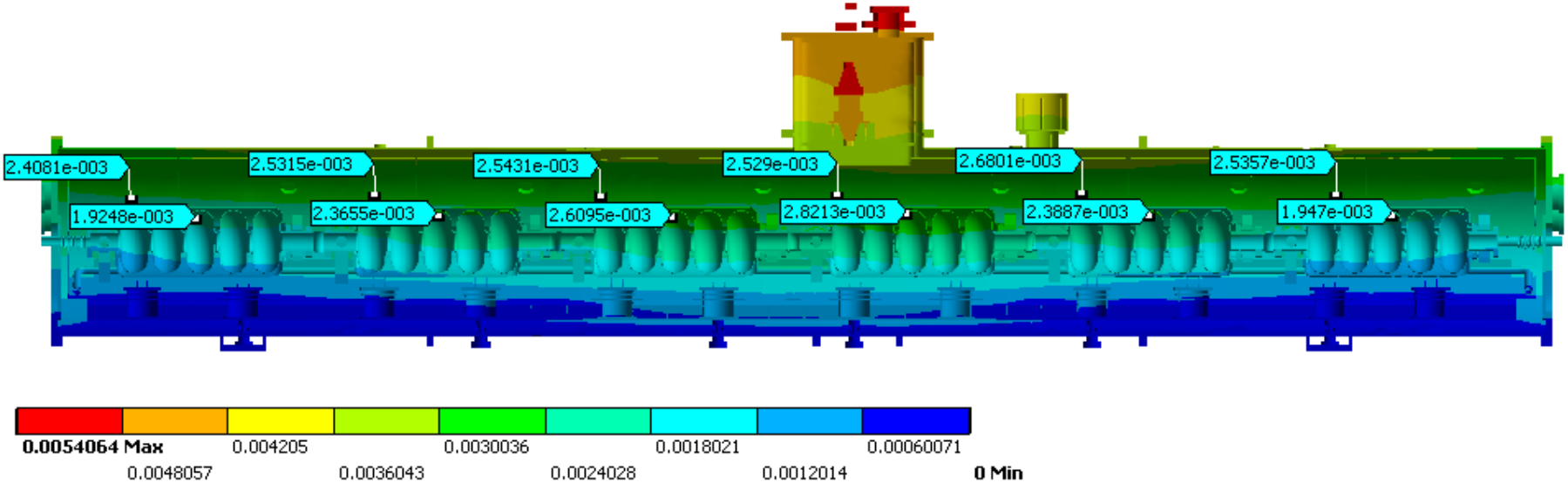

Equivalent Stress (Transvers1.5G)

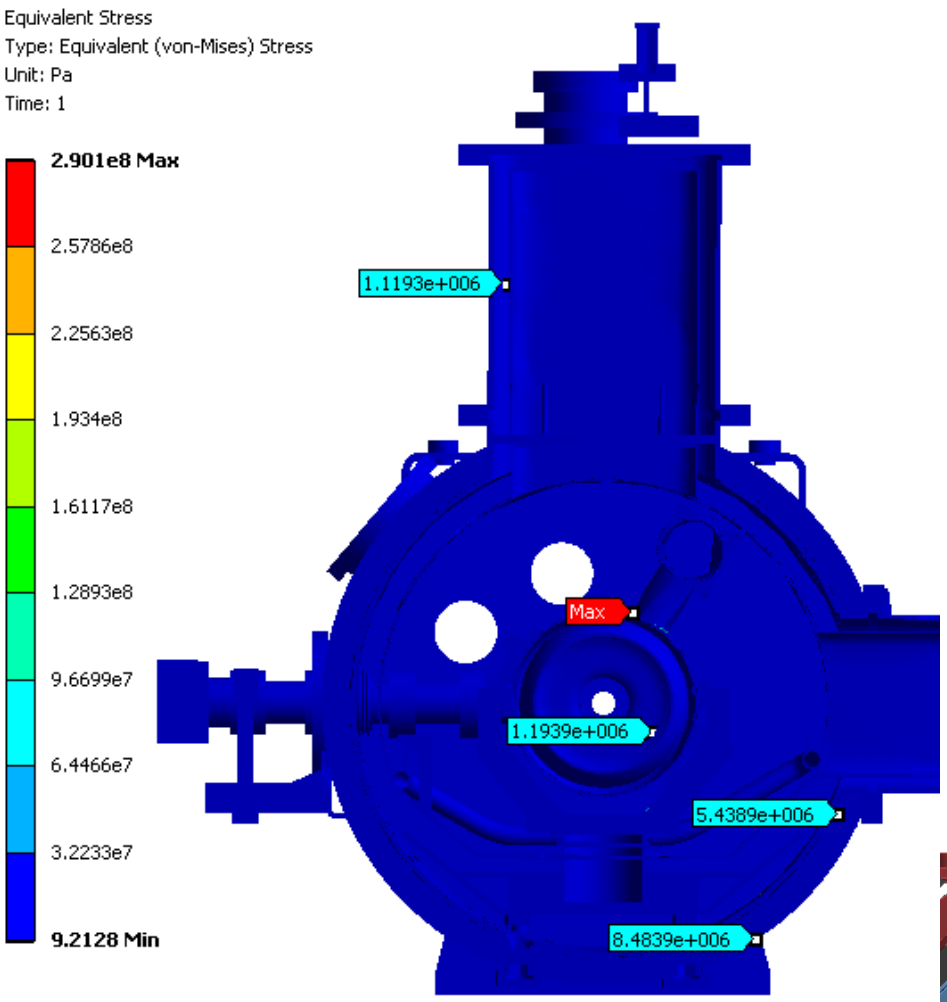

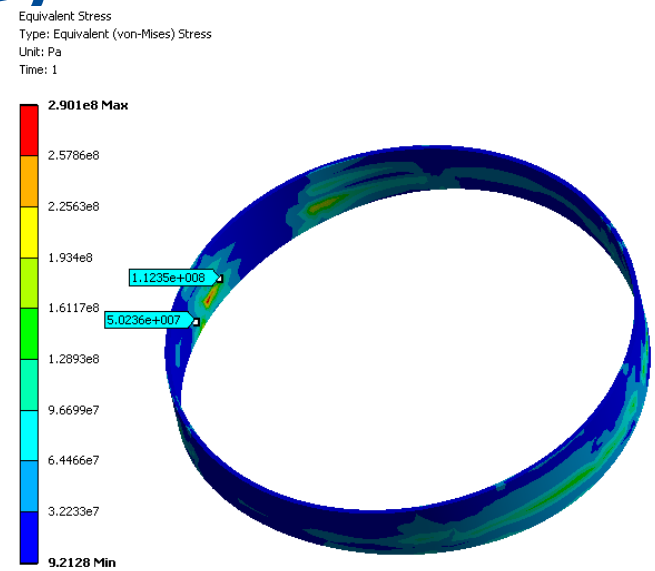

FEM

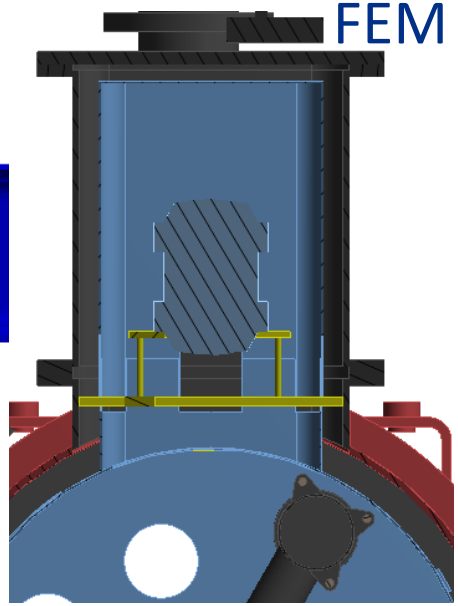

CAD

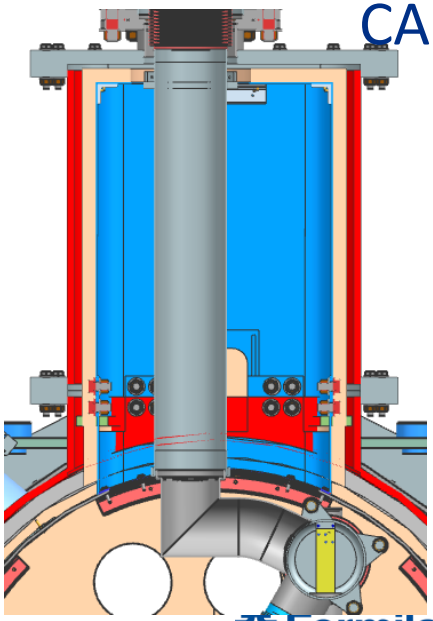

Equivalent Stress (Transvers1.5G)

Vessel

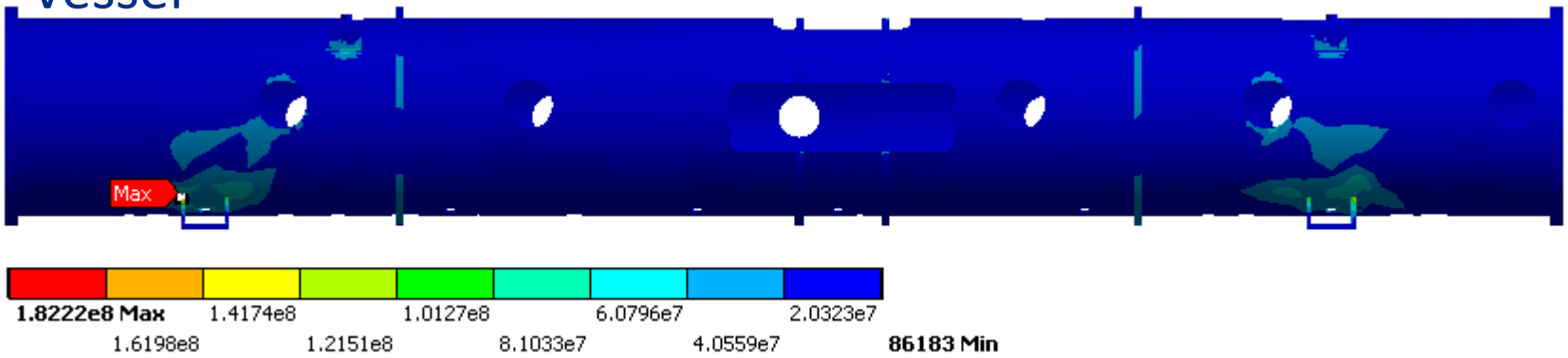

Thermal Shield

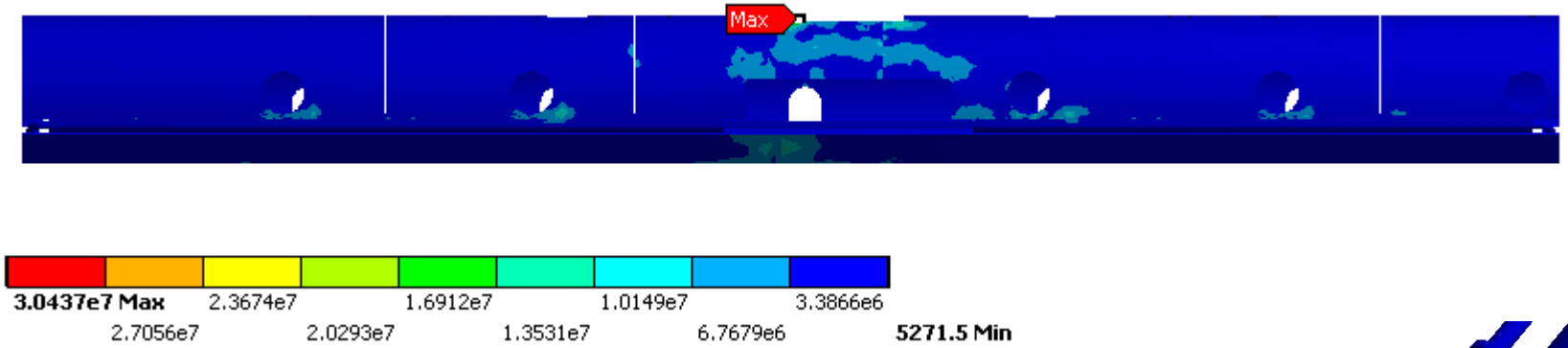

2Phase Pipe

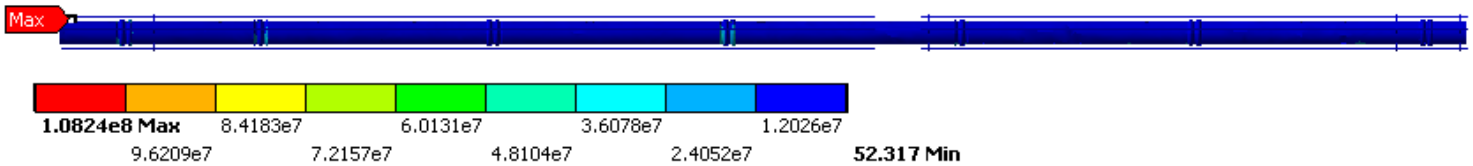

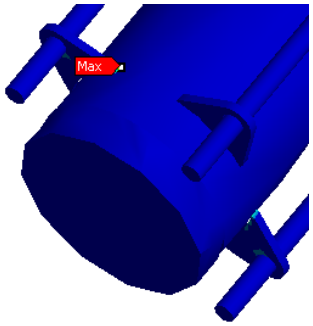

Equivalent Stress (Transvers1.5G)

Strong Back

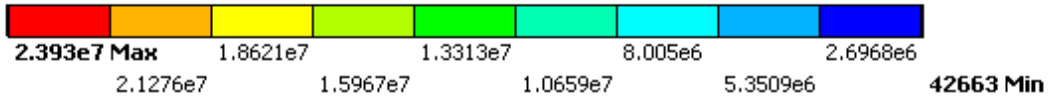

Support Post

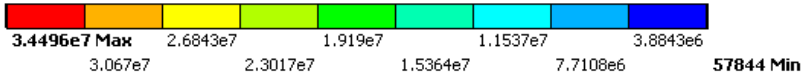

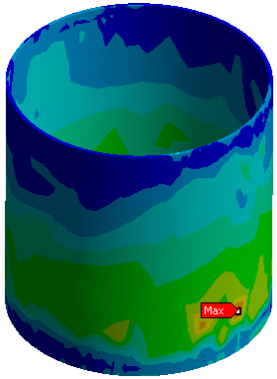

Adjust Support

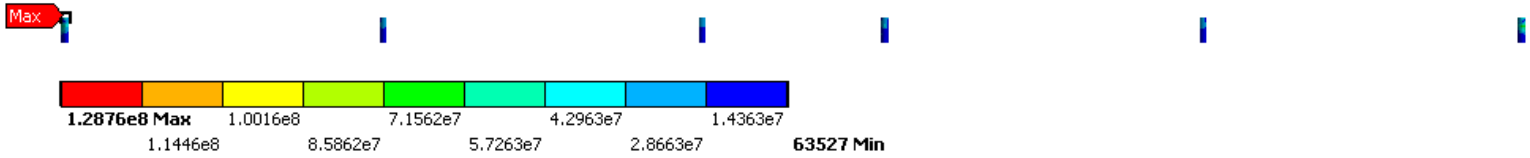

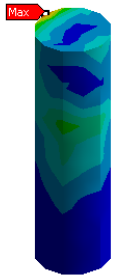

Bellows(Transvers1.5G)

Coupler Bellow

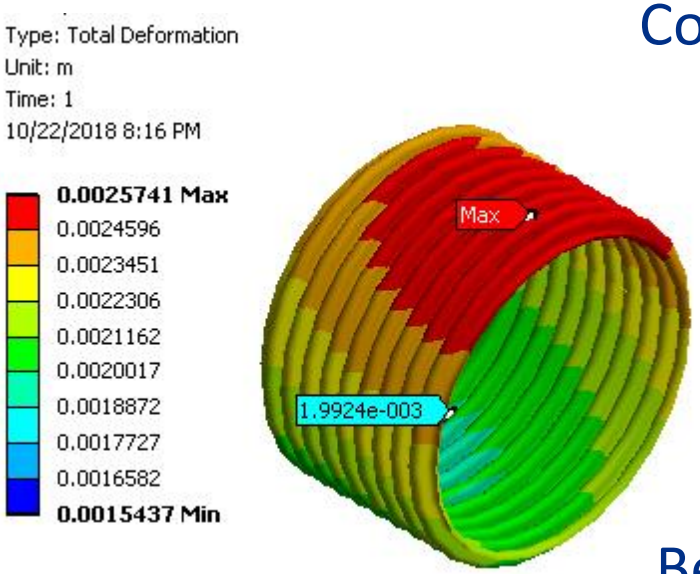

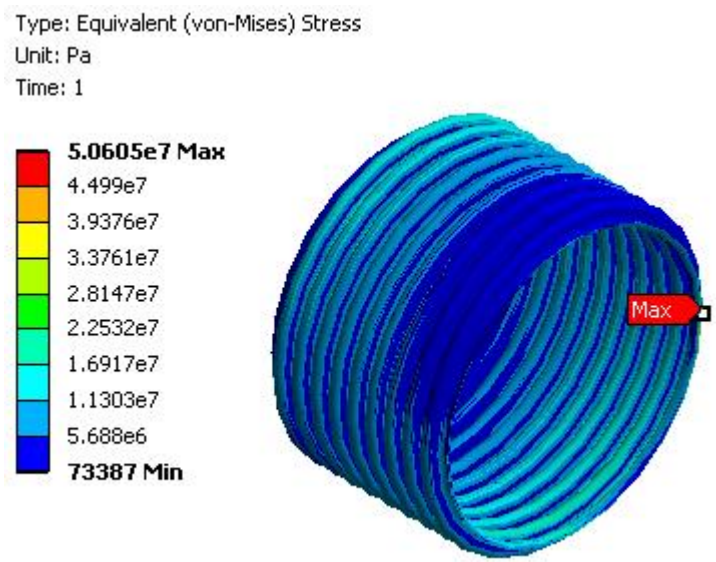

Beam Pipe Bellows

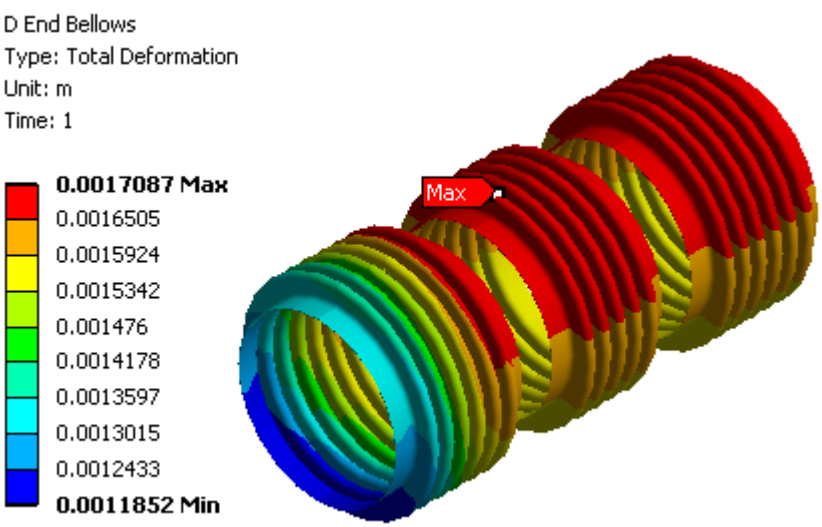

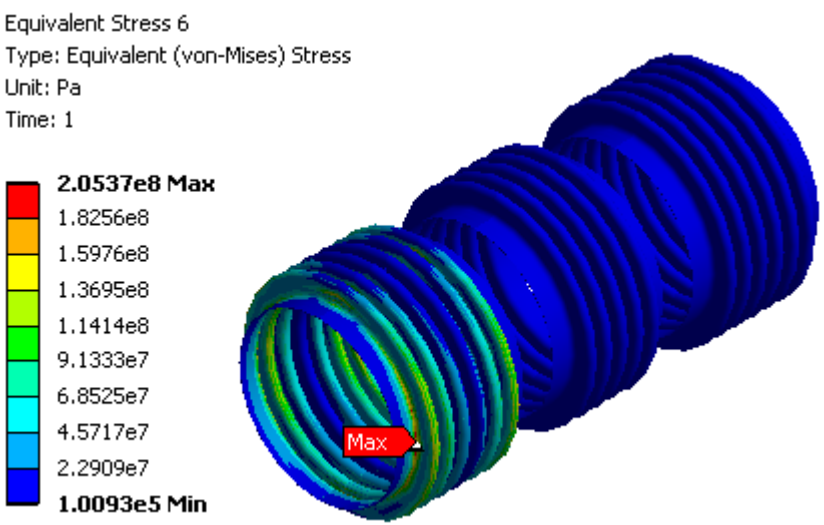

Total Deformation (Axial 5G)

- Max 3.8mm at end bellow

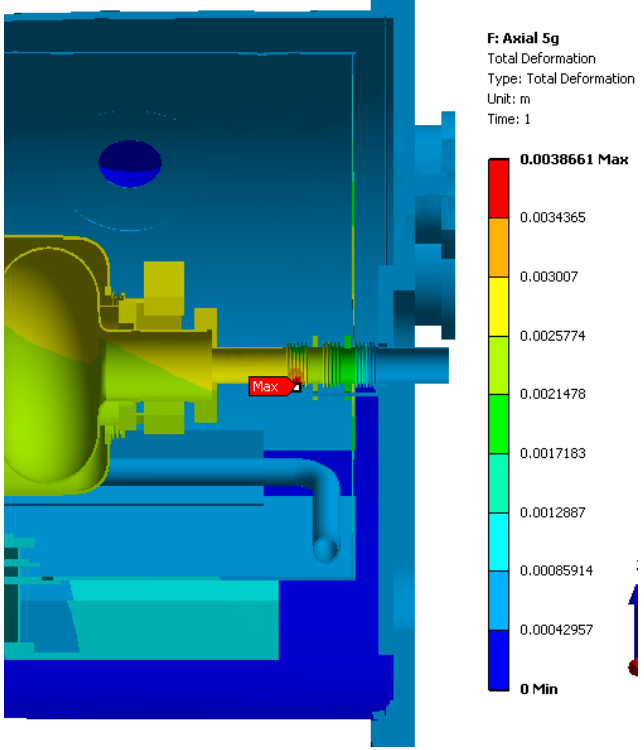

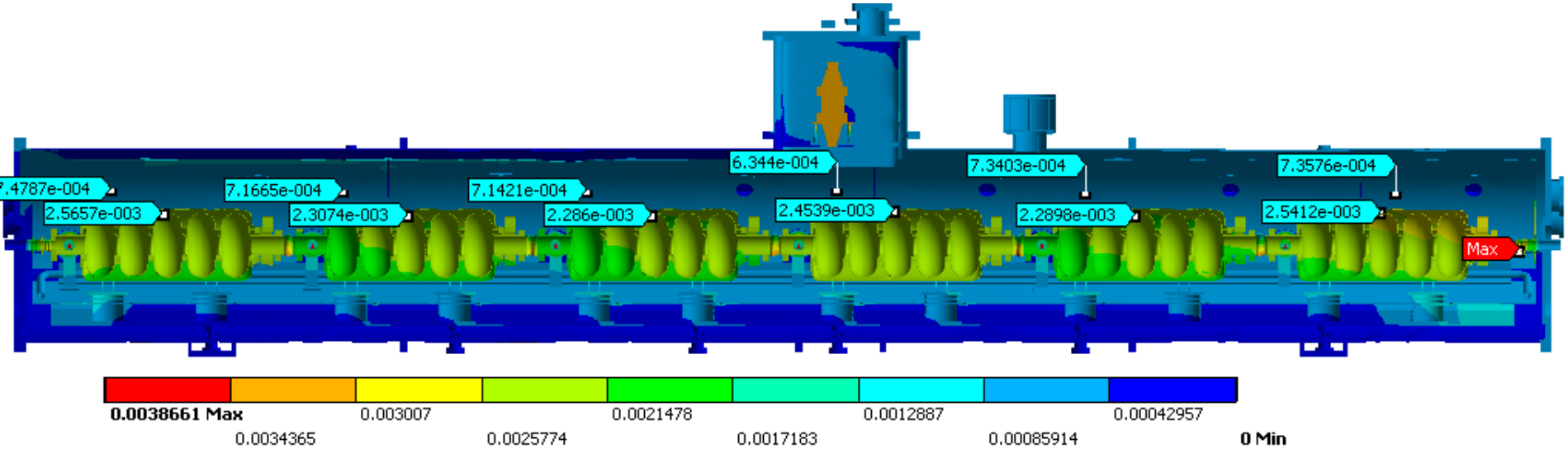

Equivalent Stress (Axial 5G)

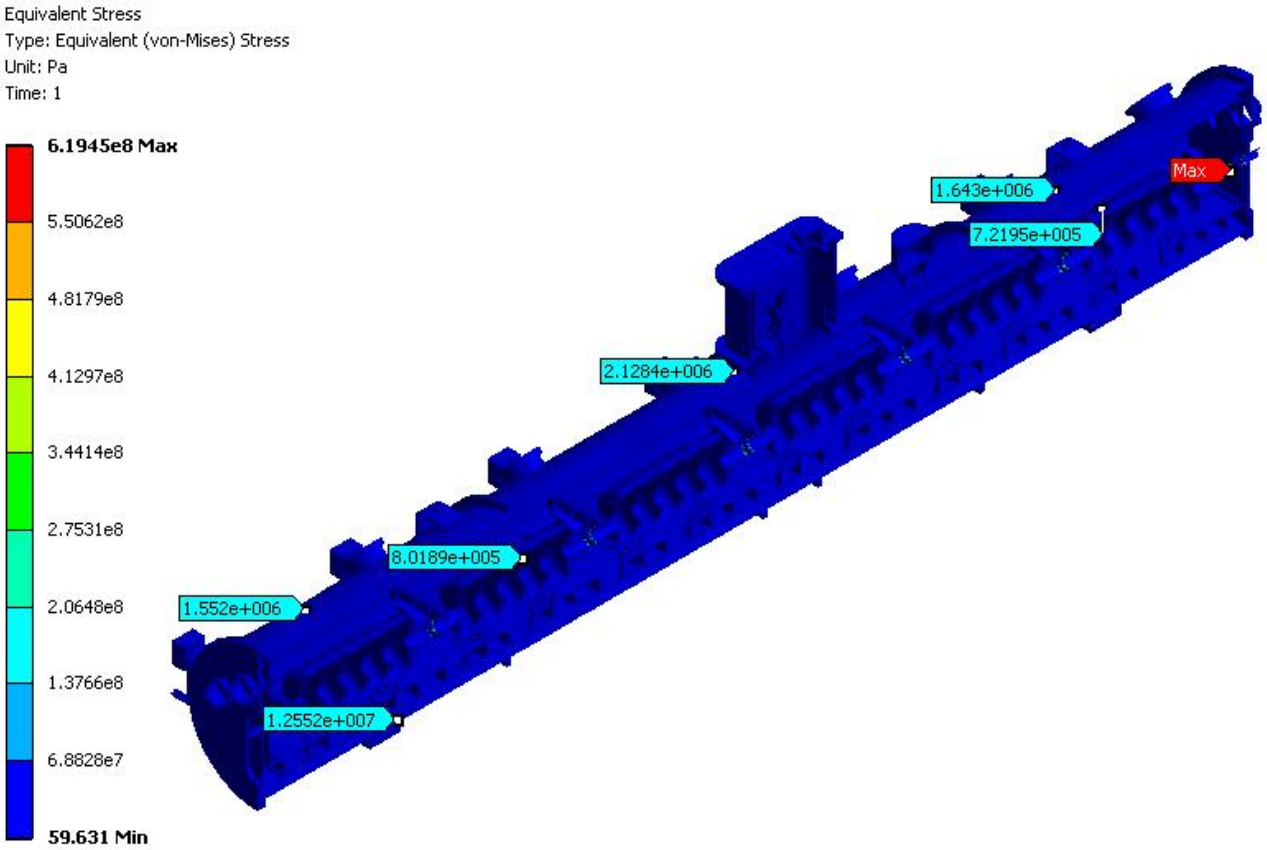

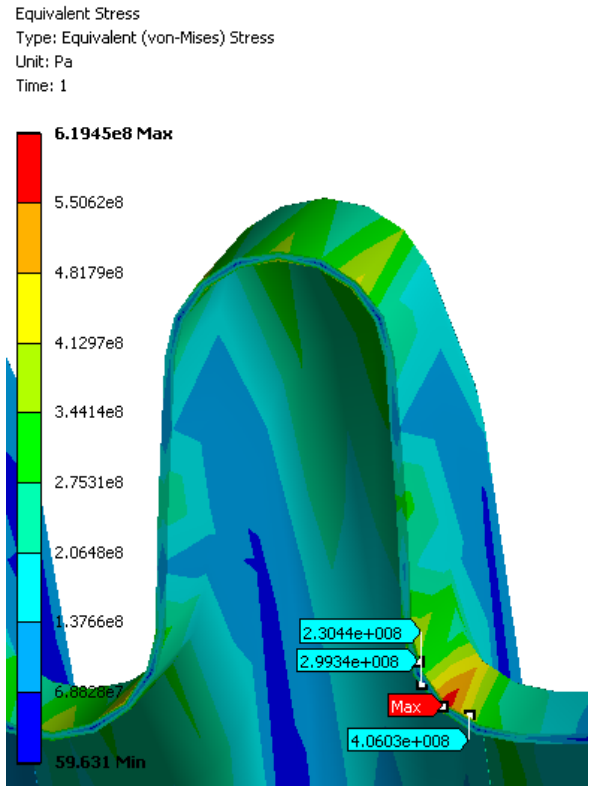

Equivalent Stress (Axial 5G)

Vessel

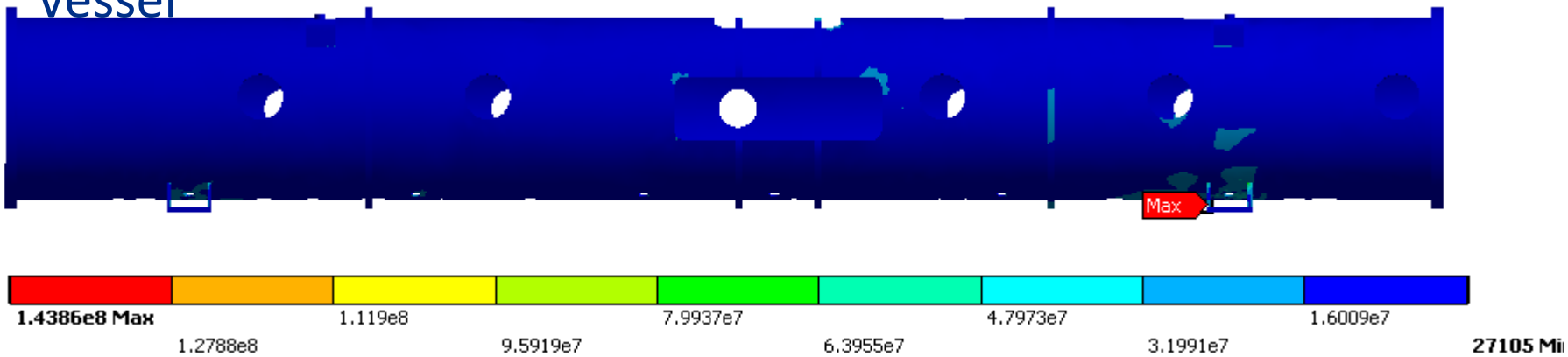

Thermal Shield

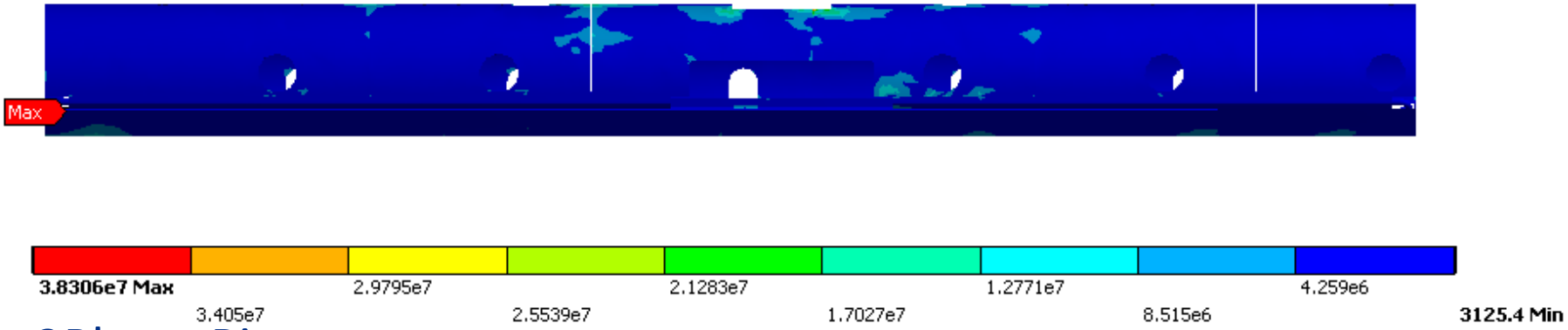

2Phase Pipe

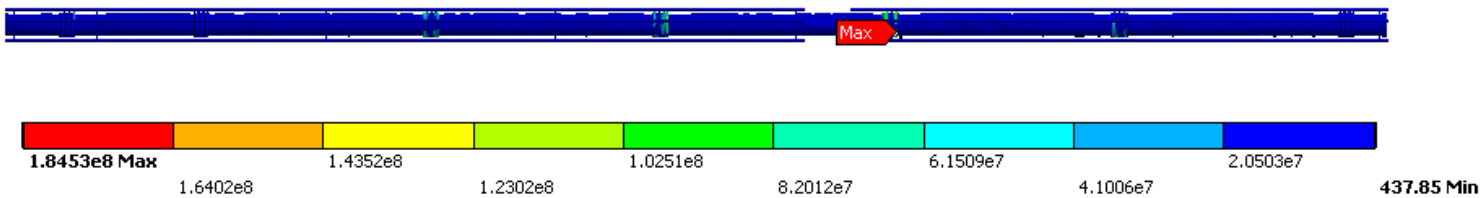

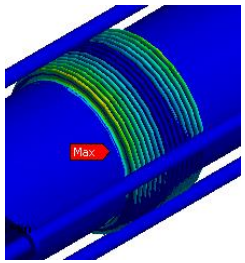

Equivalent Stress (Axial 5G)

Strong Back

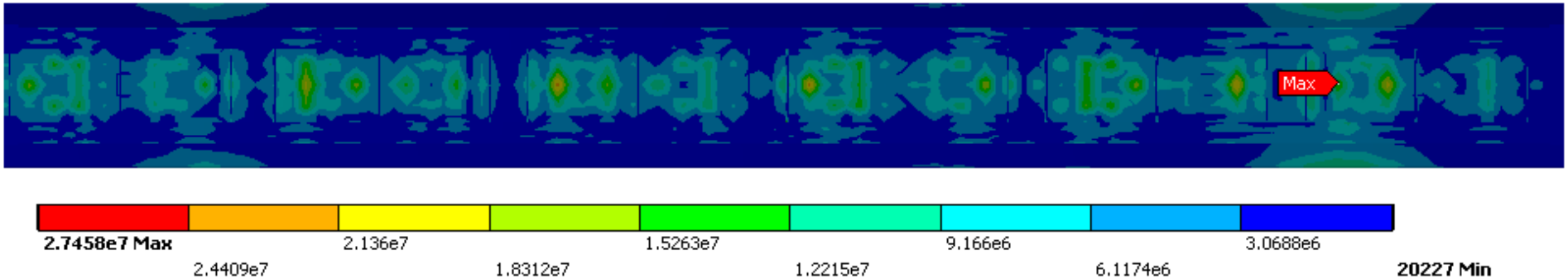

Support Post

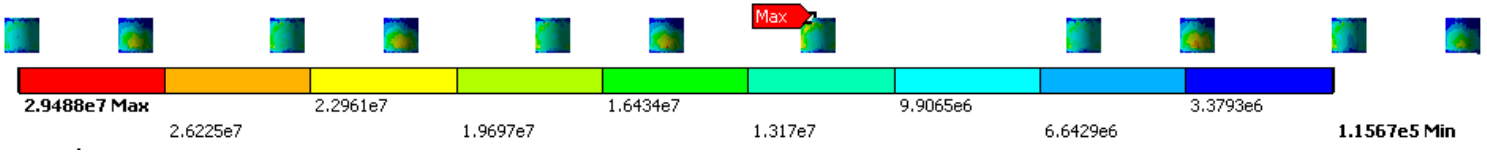

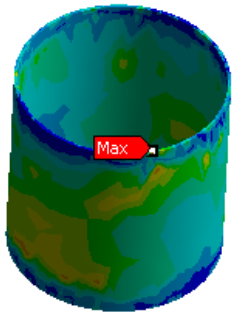

Adjust Support

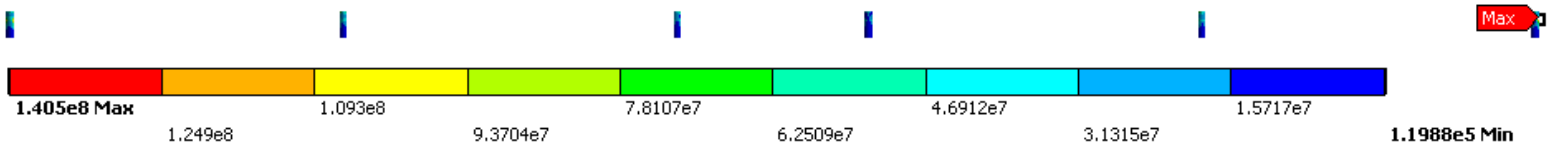

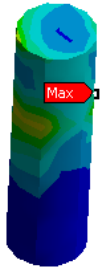

Bellows(Axial 5G)

Coupler Bellow

Type: Total Deformation
Unit: m
Time: 1

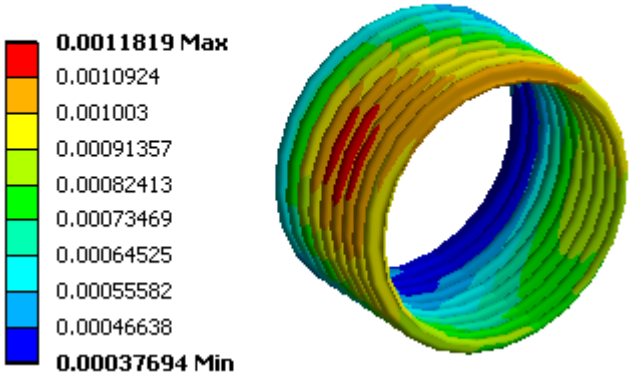

Type: Equivalent (von-Mises) Stress
Unit: Pa
Time: 1

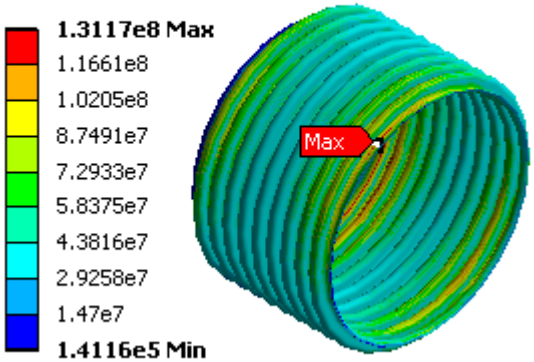

Beam Pipe Bellows

D End Bellows
Type: Total Deformation
Unit: m
Time: 1

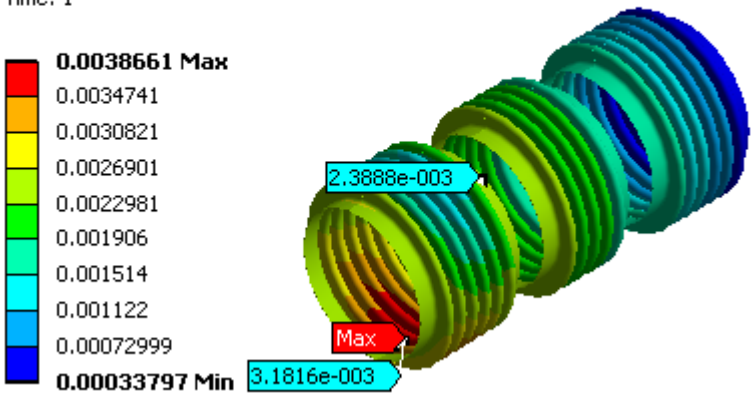

Equivalent Stress 3
Type: Equivalent (von-Mises) Stress
Unit: Pa
Time: 1

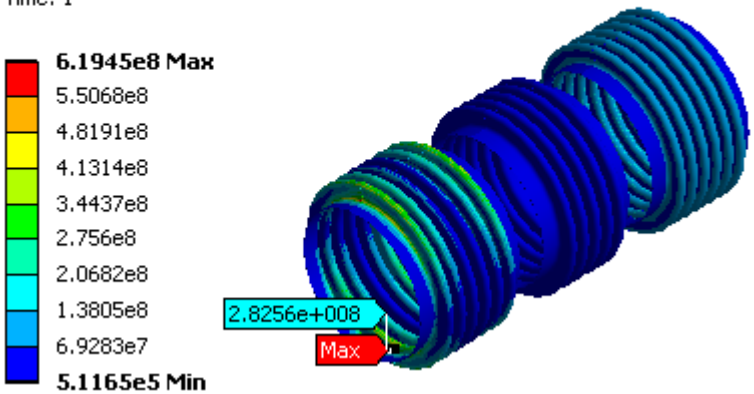

Mode 1 [11.317Hz]

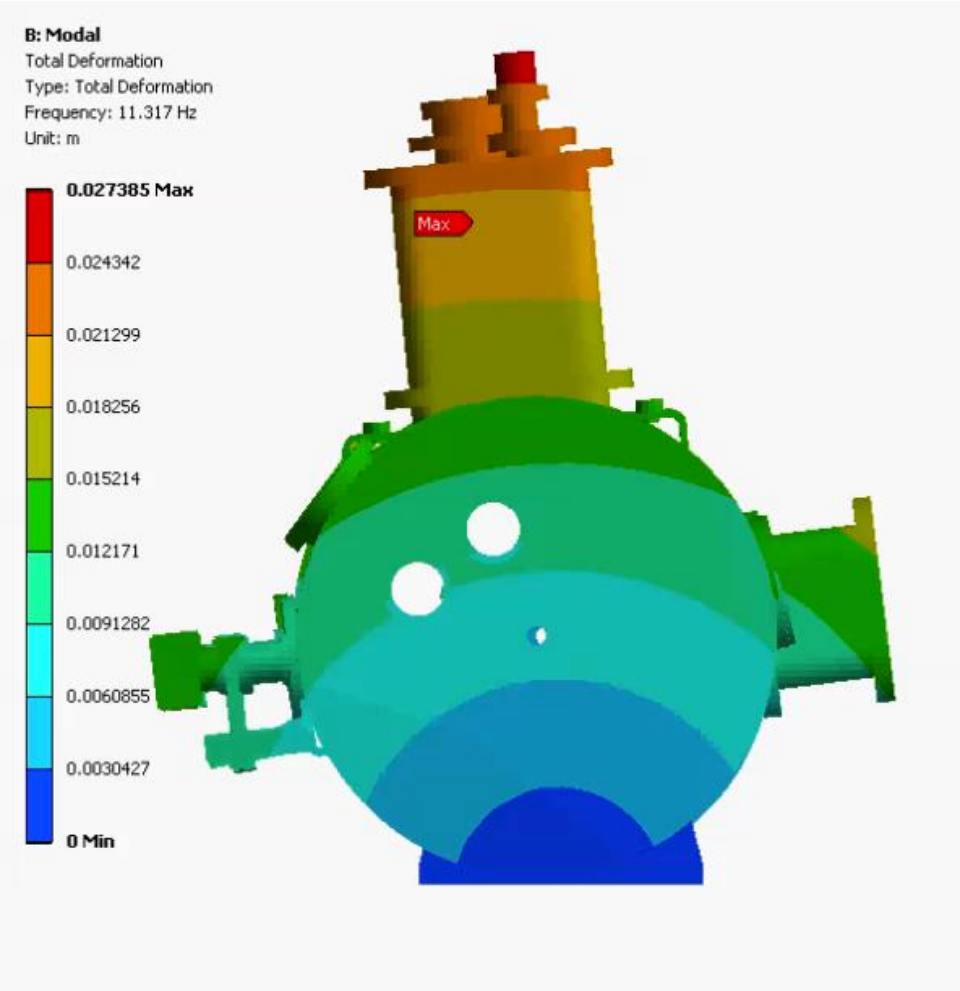

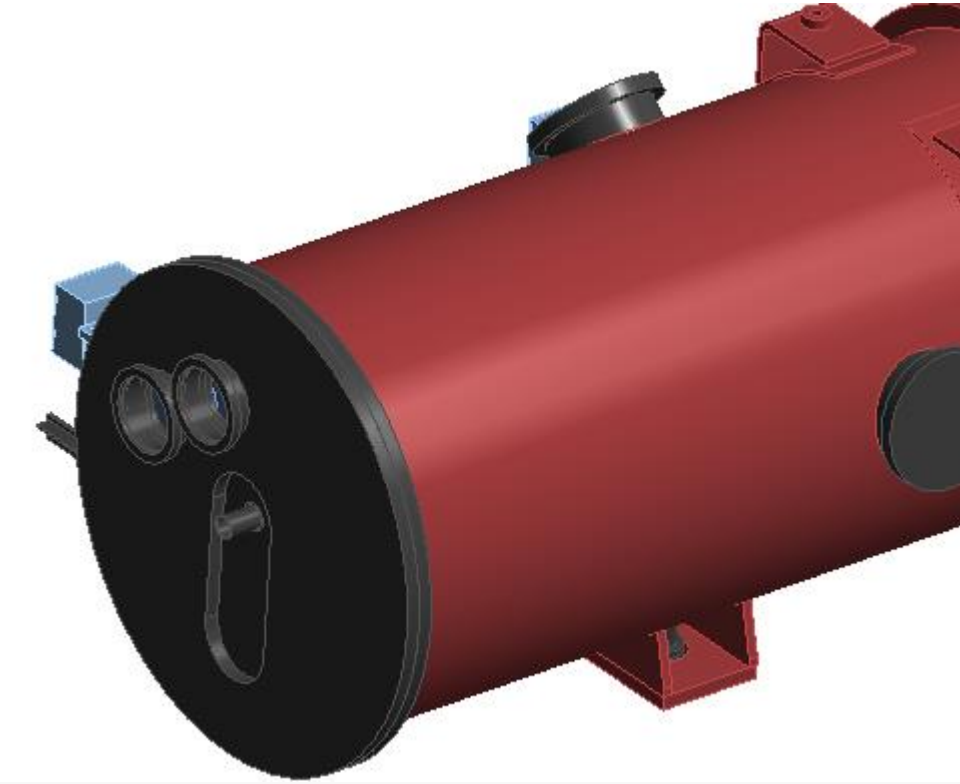

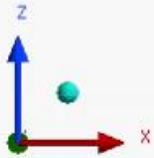

Mode 2 [12.934Hz]

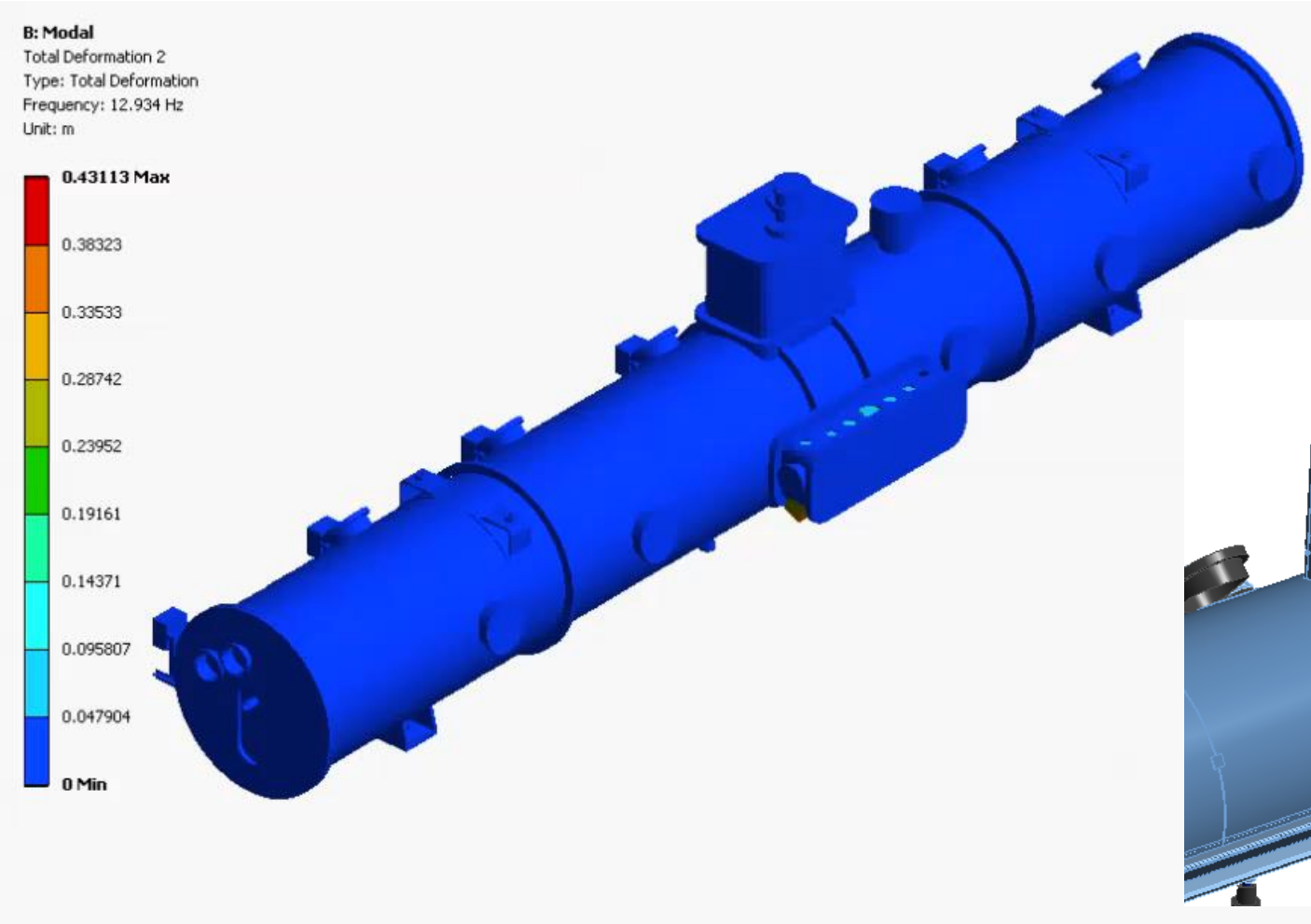

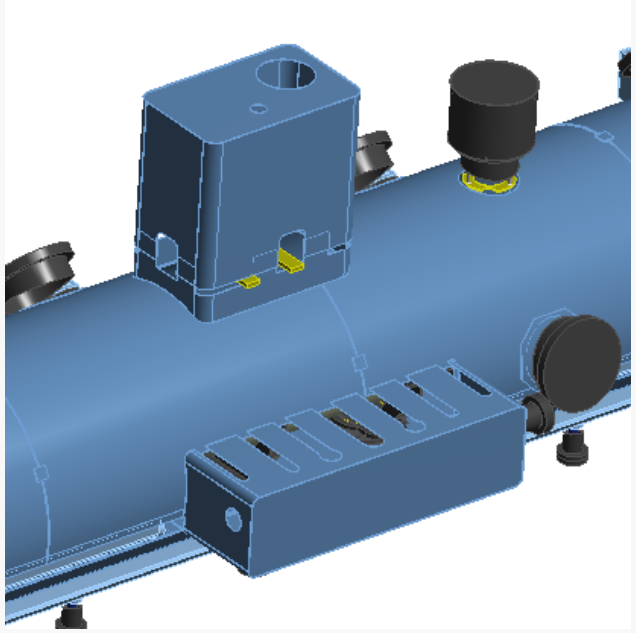

Mode 3 [18.229Hz]

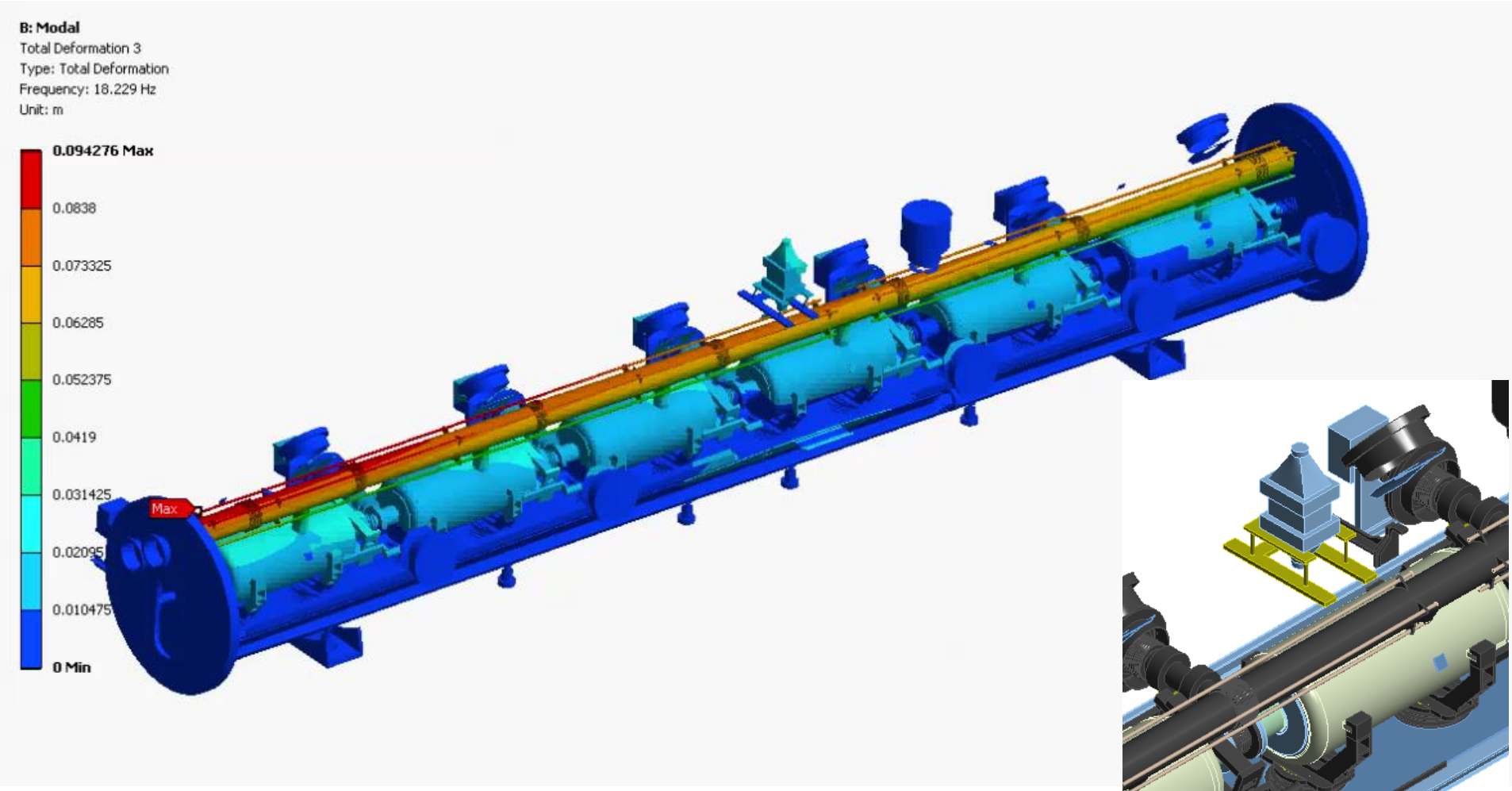

Mode 4 [20.626Hz]

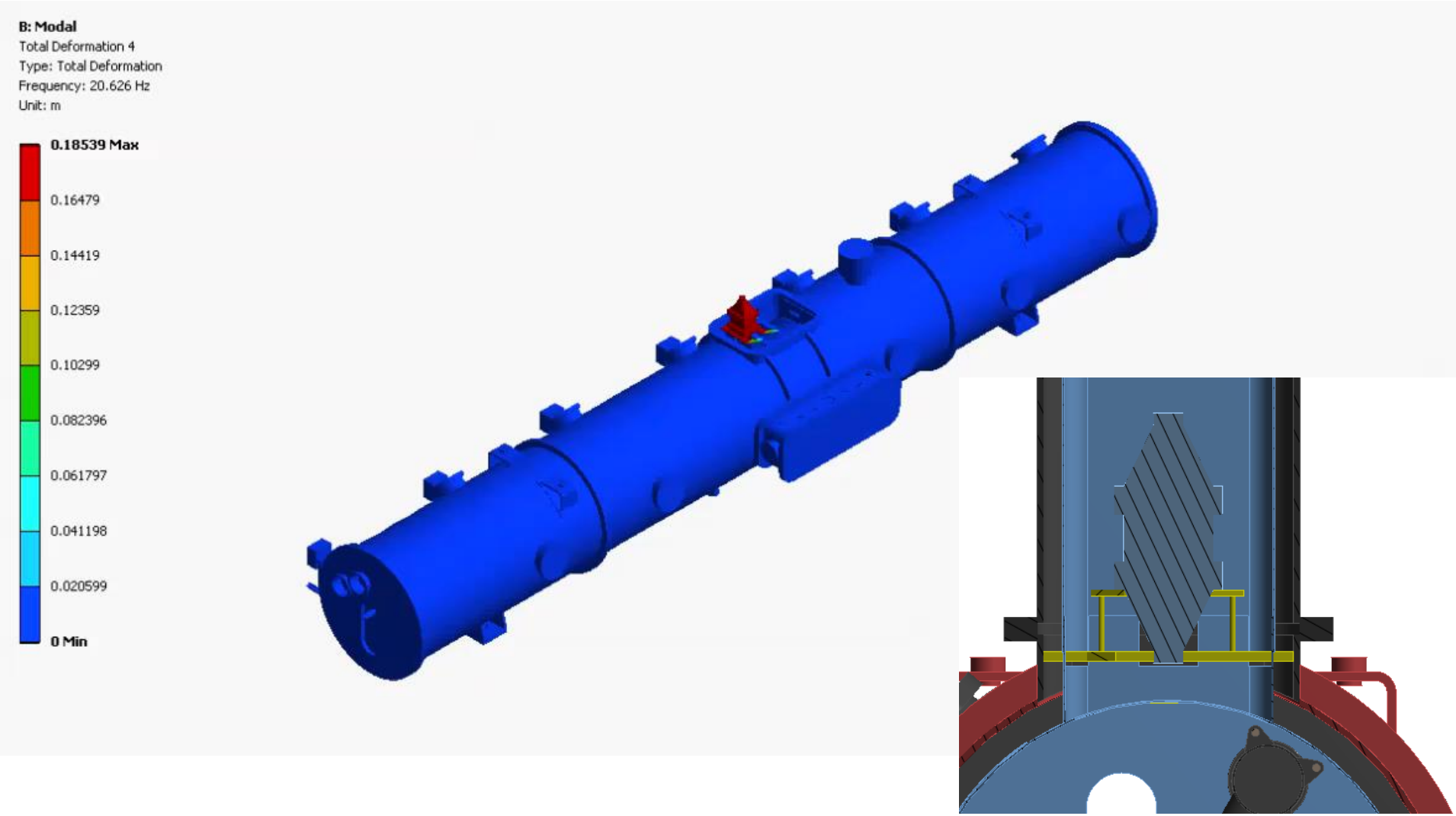

Summary

- Transportation analysis performed with similar boundary conditions as that of ESS transport analysis
- First CM design iteration results show no limitations with the strong-back design
- Deformations of strong-back design is similar to that of space-frame
- Analysis has identified some features to be modified to damp lower frequency response
  - CM design has already begun incorporating these improvements