U.S. MAGNET DEVELOPMENT PROGRAM

# 15 T Dipole: Mechanical Model Tests and Magnet Assembly Status


Igor Novitski

US Magnet Development Program


CM 16-18 January 2019

Fermi National Accelerator Laboratory

# Outline

- Magnet Design
- FEA and Target Prestress
- Mechanical Models
- Magnet Assembly Procedures
- Summary

# 15 T Dipole Magnet design has been developed

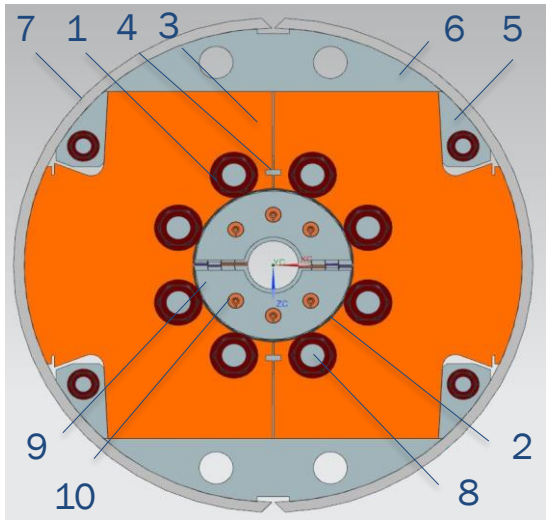


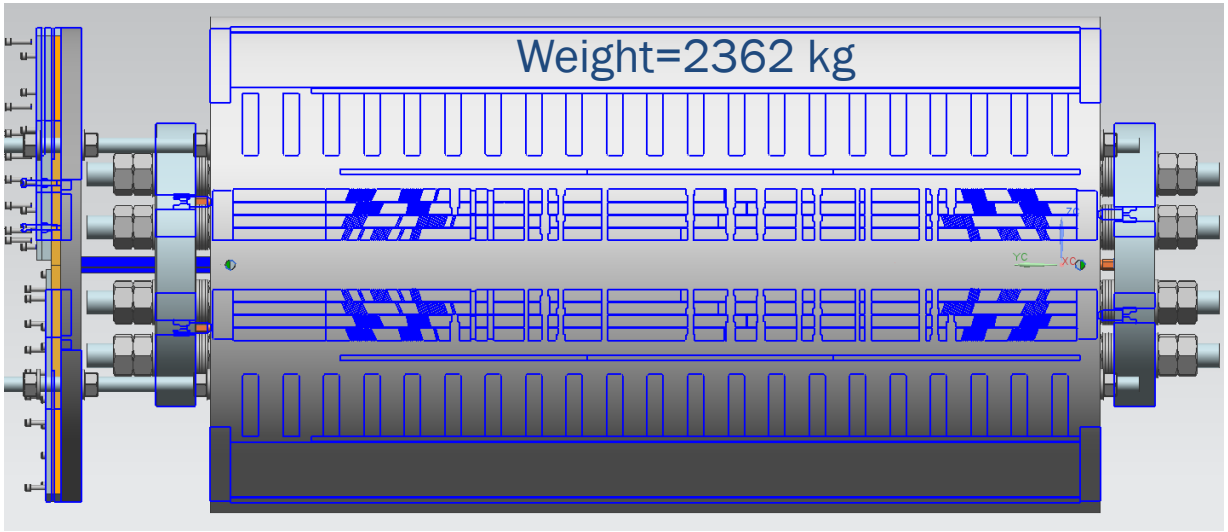


1100 mm

1 – 4-layer $Nb_3Sn$ coil
2 –coil-yoke stainless steel spacer
3 – iron yoke laminations
4 – alignment key
5 – aluminum I-clamp
6 – iron filler
7 – stainless steel welded skin
8 – stainless steel axial rod
9 – stainless steel pusher plate
10 – bullet

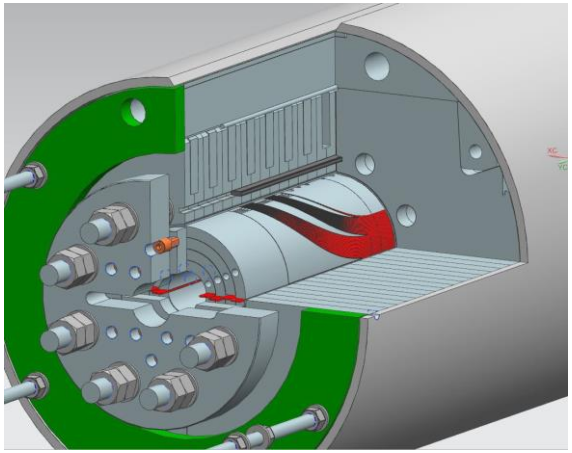

# 15 T Dipole Magnet 2D FEA has been done and checked by FEAC

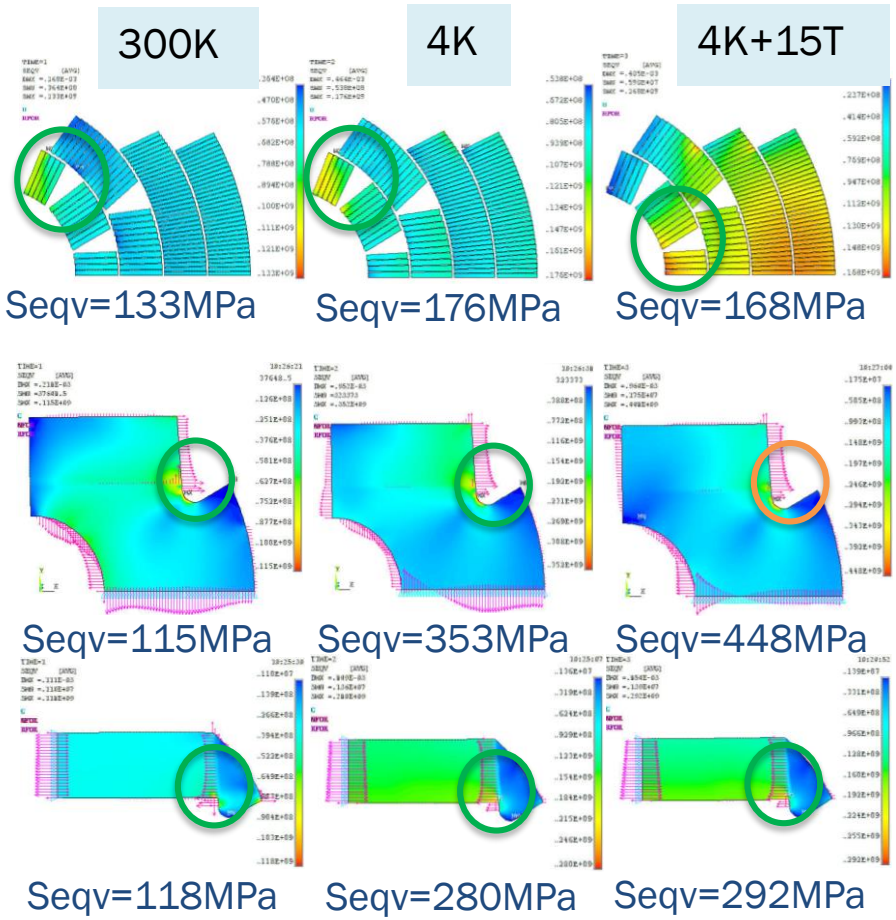


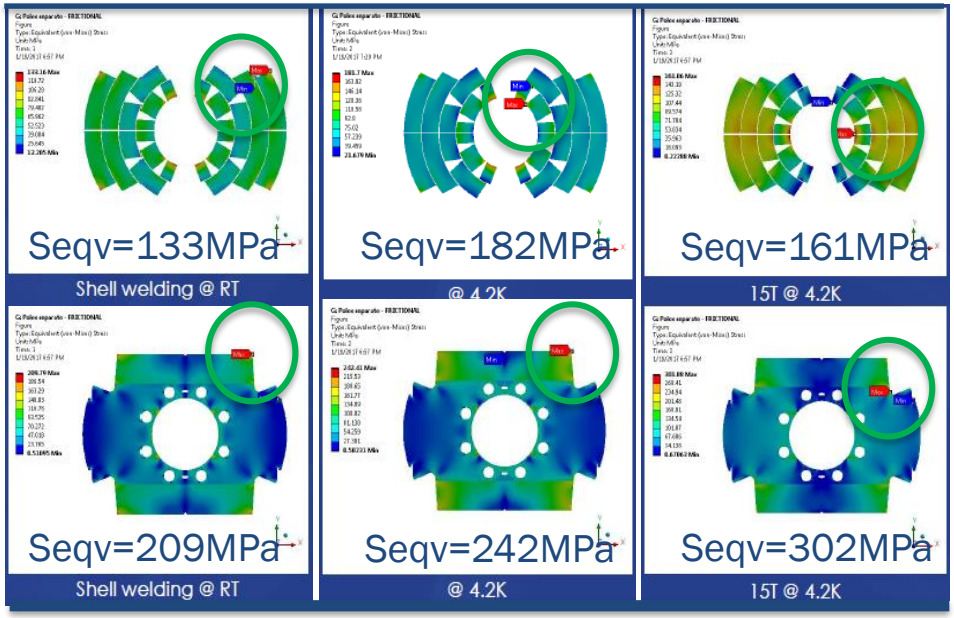


ΠΑΝΕΠΙΣΤΗΜΙΟ ΠΑΤΡΩΝ
UNIVERSITY OF PATRAS
with the assistance of
FEAC

# Shim Plan was developed based on FEA

| FEA | FNAL | FEAC |
|---|---|---|
| MP Shim L1/2 | 0 | 0 |
| MP Shim L3/4 | 0 | 0.06 |
| Shell-Yoke radial | 0 | 0.025 |
| Yoke-Skin Radial | 0.3 | 0.6 |
| Yoke-Yoke Gap t/b | 0.375<br>0.275 | 0.42<br>0.36 |
| Yoke-Clamp interference | 0.3 | 0.4 |
| Skin weld | 0.4 | 0.4 |
| Filler-Yoke interference | 0.1 | 0 |

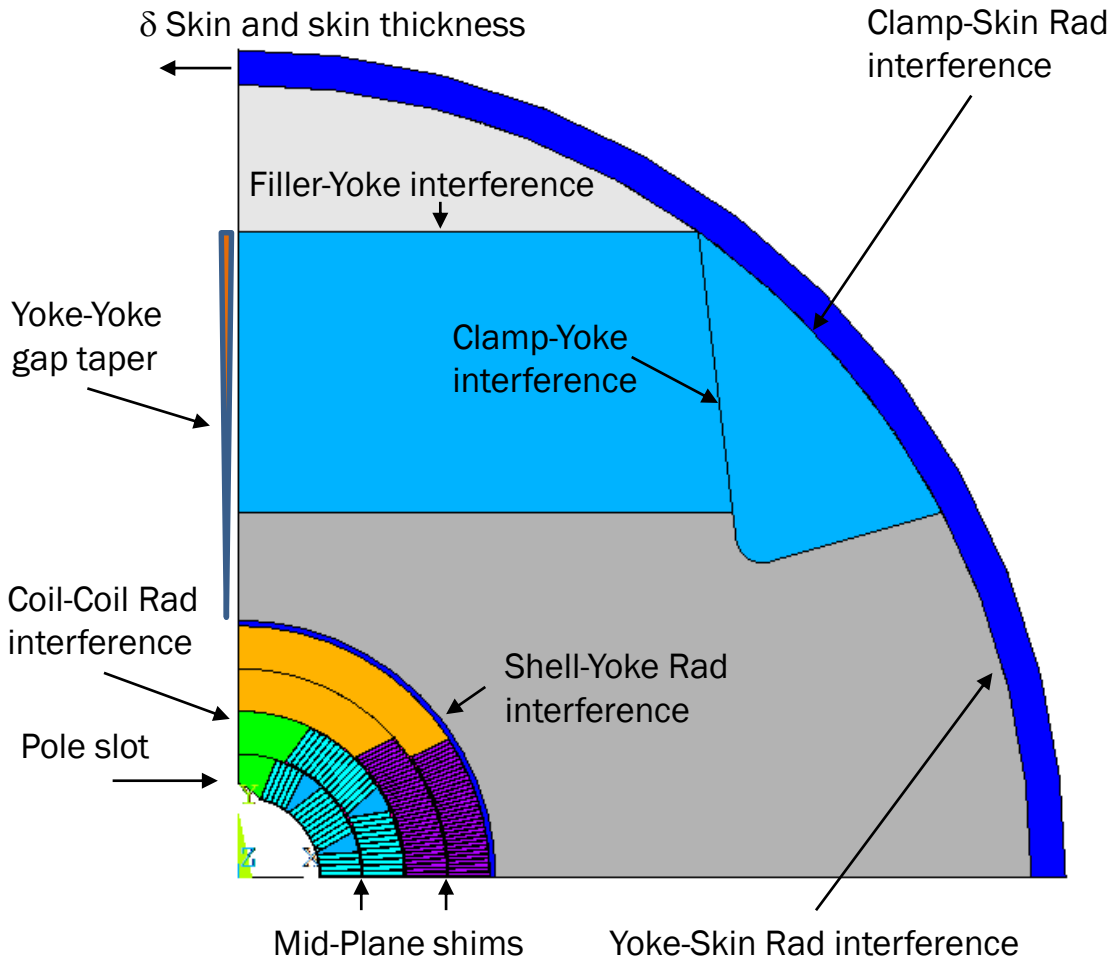

# Magnet target prestress was selected based on 2D FEA Results

AVERAGE AZIMUTHAL STRESS IN SELECTED TURNS

| Position in coil | Average Azimuthal Coil Stress, MPa | | | |
|---|---|---|---|---|
| | Clamping | Skin welding | Cool down | B=15T |
| Pole 1 | 44 | 88 | 138 | 9 |
| Pole 2 | 27 | 46 | 75 | 21 |
| Pole 3 | 35 | 64 | 97 | 36 |
| Pole 4 | 37 | 62 | 95 | 62 |
| Mid-plane 1 | 33 | 64 | 95 | 153 |
| Mid-plane 2 | 35 | 65 | 107 | 127 |
| Mid-plane 3 | 36 | 62 | 92 | 153 |
| Mid-plane 4 | 38 | 66 | 103 | 153 |

MAXIMUM EQUIVALENT STRESS IN KEY STRUCTURAL ELEMENTS (MPA).

| Structural element | Baseline design | | |
|---|---|---|---|
| | Assembly | Cool down | B=15 T |
| Coil | 133 | 176 | 168 |
| Yoke | 115 | 353 | 448 |
| Clamp | 118 | 280 | 292 |
| Skin | 280 | 404 | 428 |

Target prestress after assembly for 15T.
For 14 T it is smaller by 20MPa.

# Sensitivity analysis has been performed

| Parameter | Nominal Value | Range | Coil-VonMises @293K (119 MPa) | | Coil-VonMises @4.2K (153 MPa) | | Coil-VonMises @15T (170 MPa) | | Coil-VonMises @16T (193 MPa) | |
|---|---|---|---|---|---|---|---|---|---|---|
| | | | Range [MPa] | $\Delta\sigma_{max}$ [MPa] | Range [MPa] | $\Delta\sigma_{max}$ [MPa] | Range [MPa] | $\Delta\sigma_{max}$ [MPa] | Range [MPa] | $\Delta\sigma_{max}$ [MPa] |
| Weld shrinkage | 0.4 mm | 0-0.06 | 117-120 | 3 | 152-154 | 2 | 170-171 | 1 | 192-194 | 2 |
| MP Inner (1) | 0 | 0-0.09 | 109-119 | 17 | 153-179 | 26 | 170-218 | 48 | 193-241 | 48 |
| MP Outer (2) | 0.06 mm | 0-0.06 | 102-145 | 43 | 151-162 | 11 | 170-196 | 26 | 192-205 | 13 |
| Yoke – Yoke (3) | 0.36 mm | 0.5-0.65 | 103-120 | 17 | 128-178 | 50 | 167-177 | 10 | 189-199 | 10 |
| Yoke - Shell (4) | 0.6 mm | 0.35-0.45 | 118-120 | 2 | 152-154 | 2 | 170-171 | 1 | 192-194 | 2 |
| Yoke - IC Clamp (5) | 0.4 mm | 0.31-0.41 | 113-123 | 10 | 152-155 | 3 | 170-171 | 1 | 191-195 | 4 |
| Collaring Shoe - Yoke (6) | 0.025 mm | 0.35-0.45 | 119-138 | 19 | 143-178 | 35 | 170-180 | 10 | 183-205 | 22 |
| $E_r$ | 44GPa @ RT | 20-60 GPa | 118-124 | 6 | 153-154 | 1 | 170-187 | 17 | 188-214 | 26 |
| | 55GPa @ 4.2K | 25-77 GPa | | | | | | | | |
| $E_\theta$ | 44GPa @ RT | 20-60 GPa | 100-141 | 41 | 17-177 | 80 | 136-199 | 63 | 157-226 | 69 |
| | 44GPa @ 4.2K | 20-60 GPa | | | | | | | | |
| $\alpha_r$ | 2.6 mm/m | 2-3 mm/m | 119-119 | 0 | 126-126 | 90 | 168-213 | 45 | 193-234 | 41 |
| $a_\theta$ | 3.5 mm/m | 3-4 mm/m | 119-119 | 0 | 143-163 | 20 | 164-177 | 13 | 190-198 | 8 |

Table 2

# Several short MM were assembled and test at room and LN temperatures

Goals:

- Test yoke and clamp mech limits a 77K
- Validate 2D/3D mechanical analysis

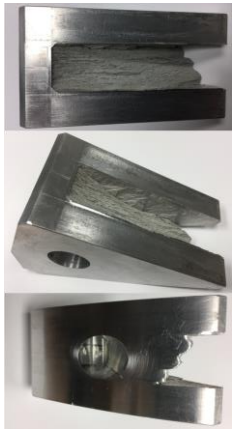

Broken Clamp at 77 K

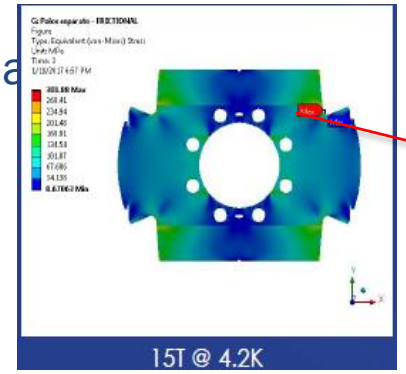

15T @ 4.2K

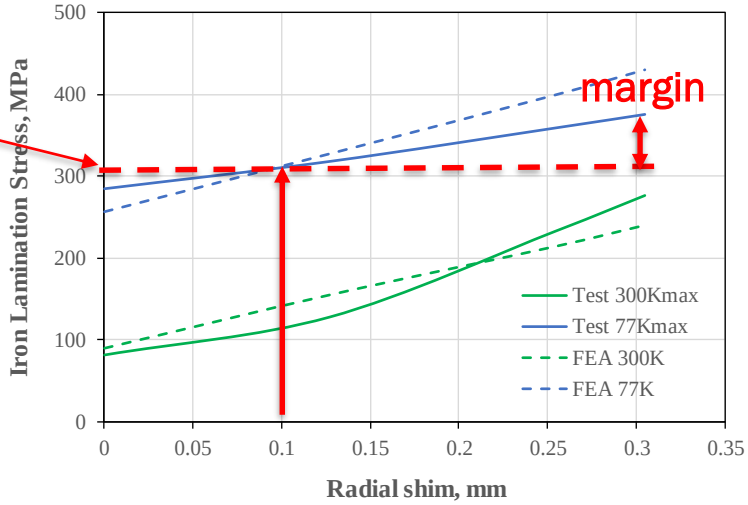


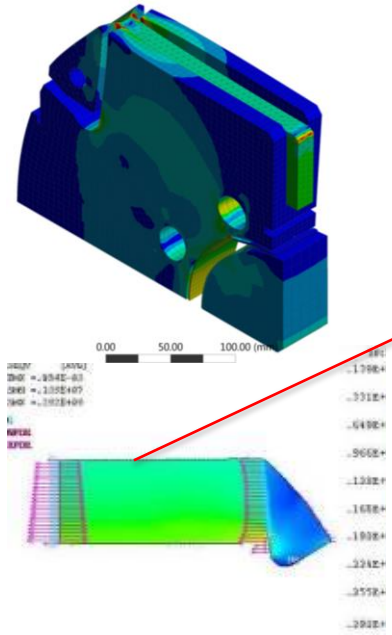

15T @ 4.2K

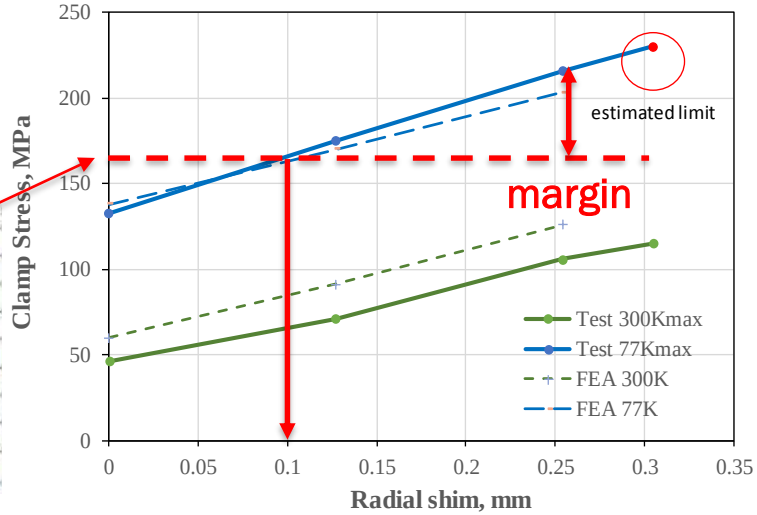

U.S. MAGNET DEVELOPMENT PROGRAM

# Clamp Design was optimized and tested

- New clamps were redesigned, fabricated and tested
- Larger radii at stress concentration area
- No holes
- Modification of the magnet suspension completed.

New Clamp

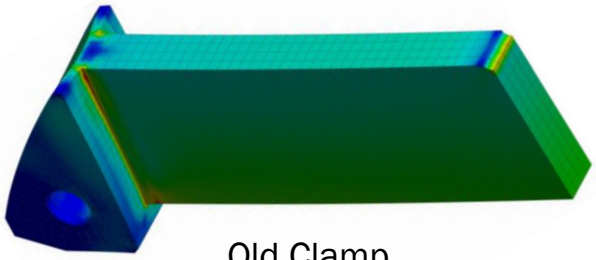

Old Clamp

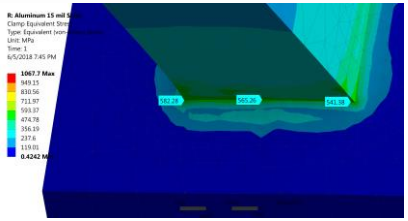

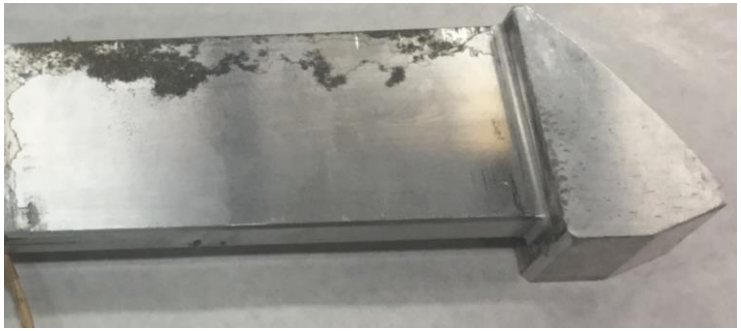

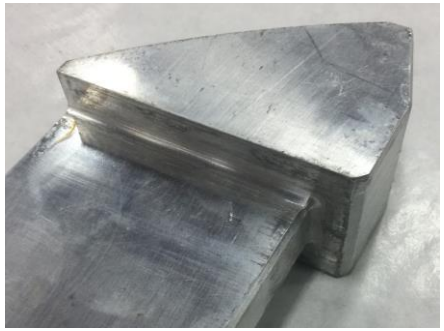

# Long Mechanical Model was assembled and tested

Goals:

- test all main components of the mechanical structure and tooling
- develop a coil assembly plan and procedure
- check instrumentation
- validate the magnet FEA

Model tests:

- parts uniformity checking using Fuji film
- multiple assembly with various radial shims
- instrumentation testing on the Al dummy coils

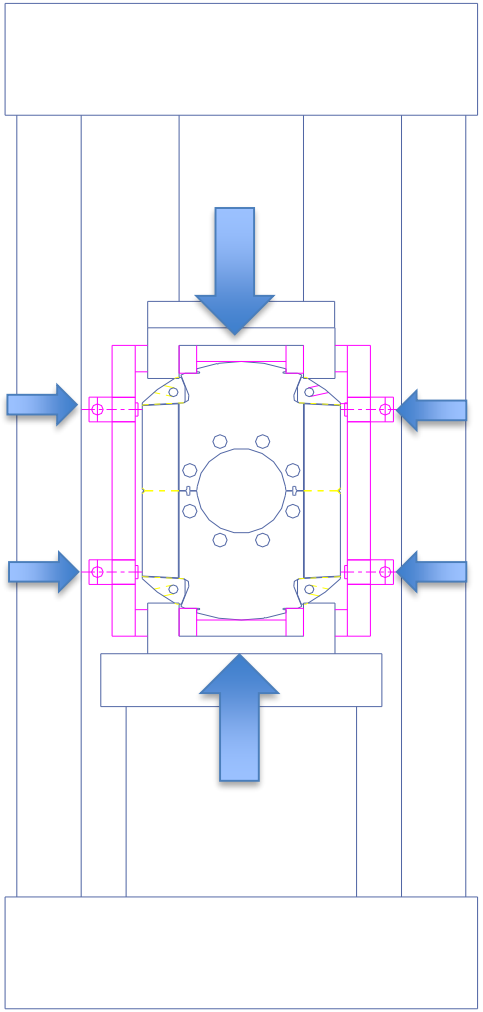

# Magnet Assembly Plan was developed and reviewed

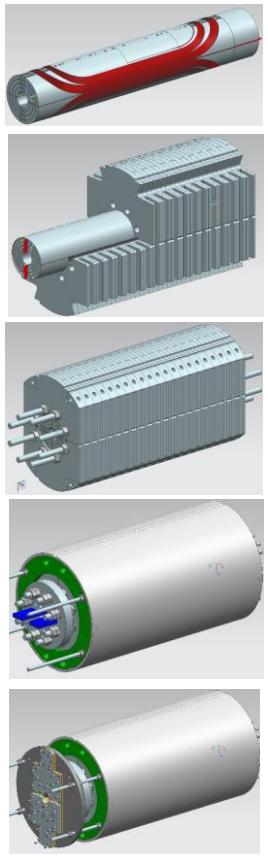

Magnet Assembly Steps:

- Coil Size measurement analysis and coil matching
- Coil shimming
- Coil Block Assembly with PH and ground insulation
- Coil block assembly with iron yoke
- Massaging and Iron Yoke Clamping
- Shell Welding
- Coil Ends Loading
- Leads Splicing
- Soldering Wires to Hypotronic connector
- Final Electrical Check

The plan was reviewed by the review committee on October 5, 2018

- All comments and recommendation have been addressed

# Coil Pairing options were limited by coil power leads

15T Dipole
Magnet Schematic

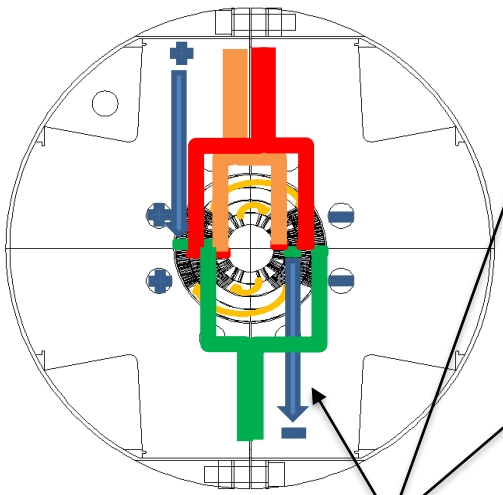

Long power lead

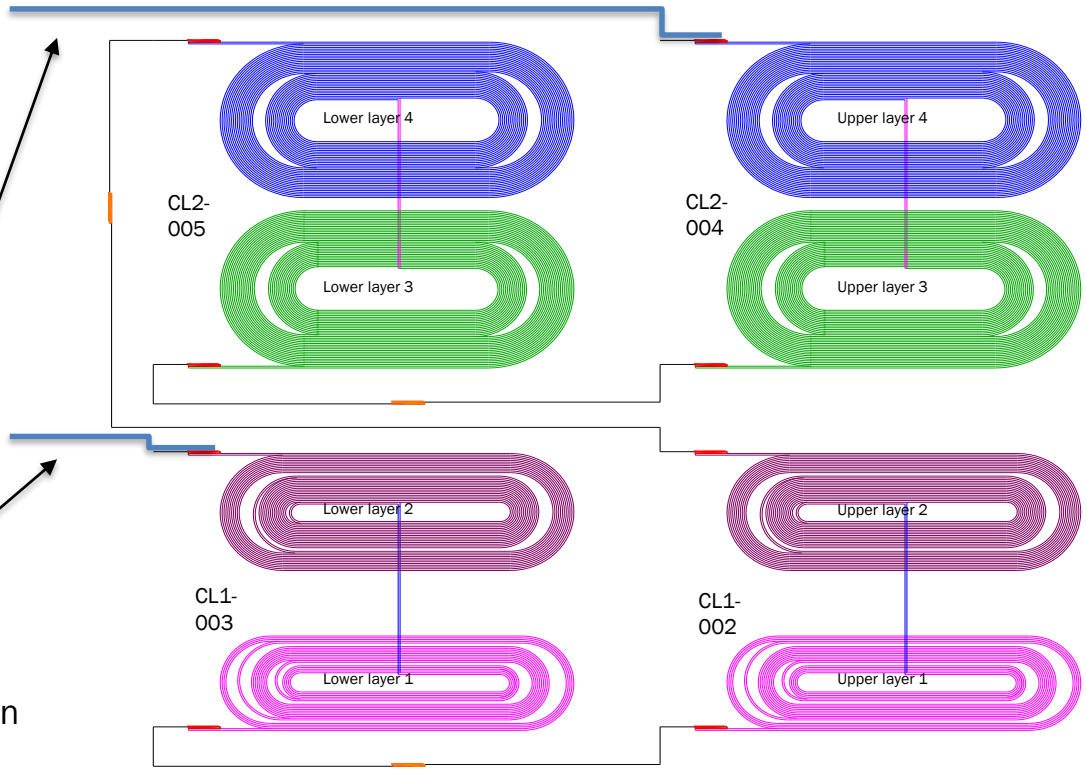


Coil coupling depends on
the magnet power leads location

# Coil Sizes were measured and analyzed

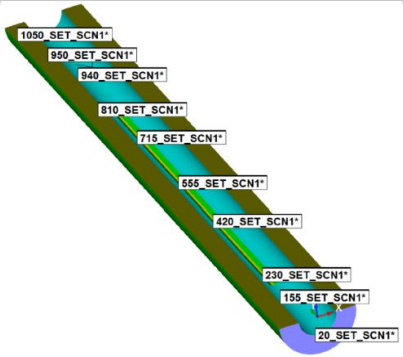


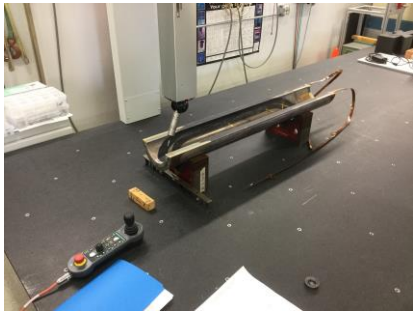

CL1-003

CL1-002

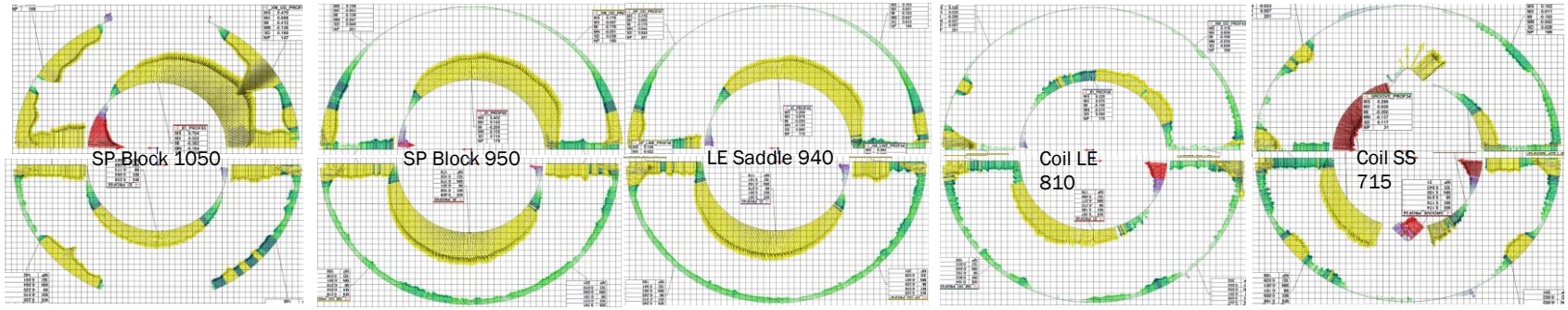


CL1-003

CL1-002

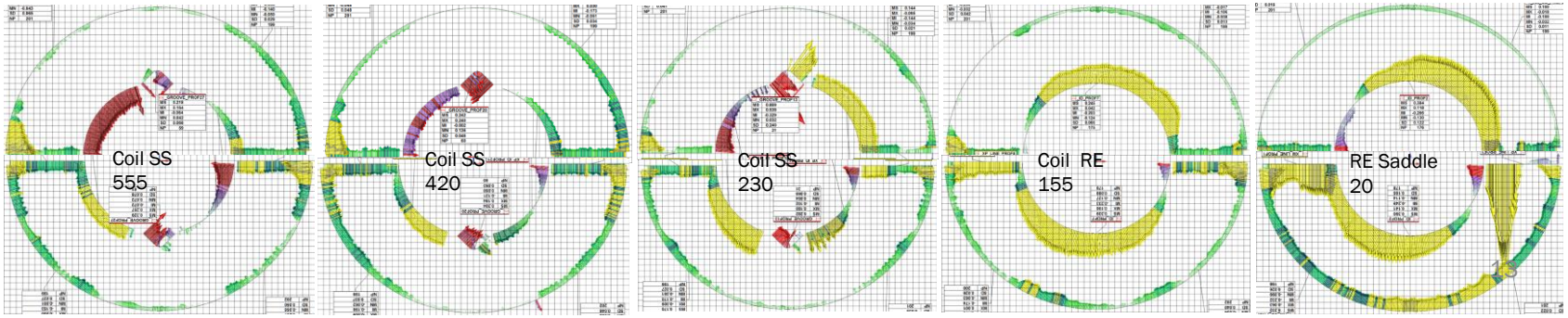

# Coil Interfaces were analyzed and optimized

HFM-CL1-003
230mm from RE

L2 OD by 80 mic smaller

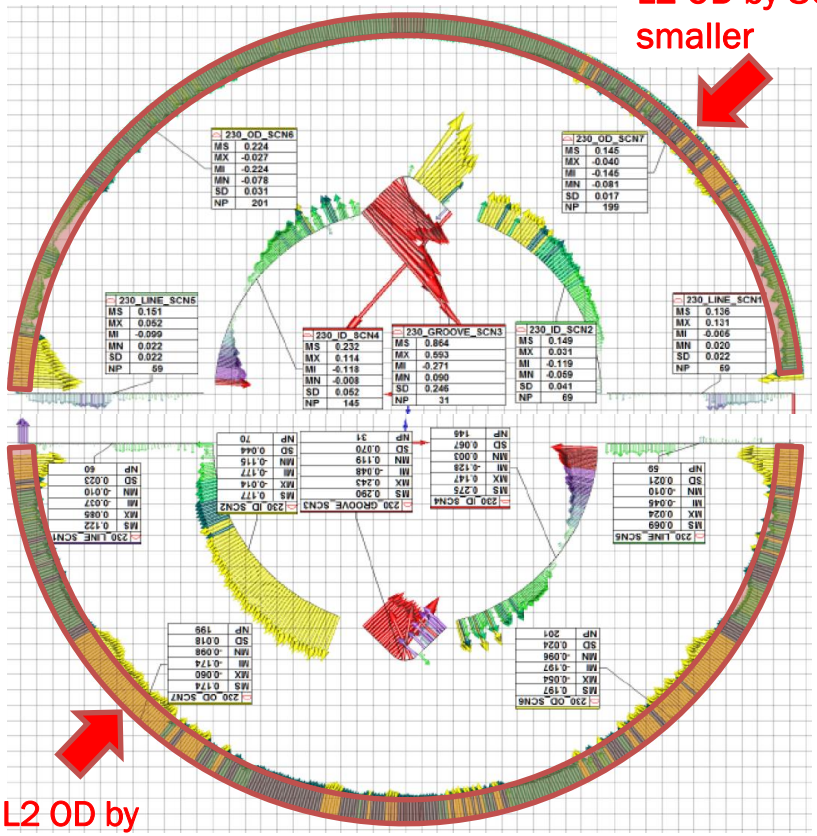


L2 OD by 96 mic smaller

HFM-CL1-002
230mm from RE

HFM-CL2-005
218mm from RE

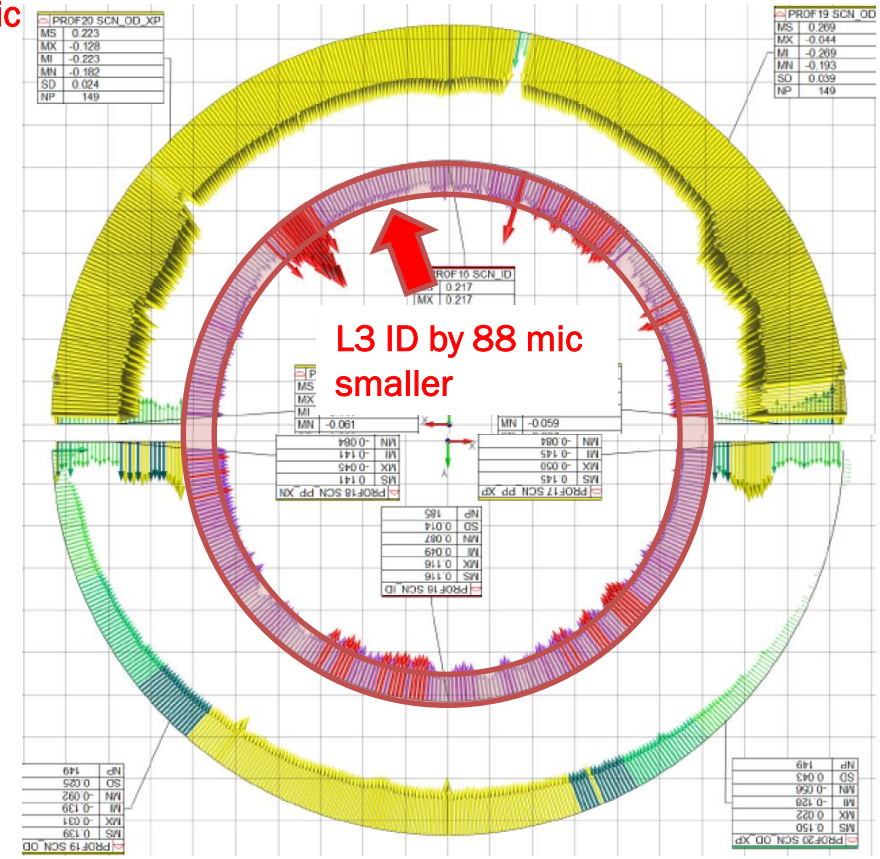


HFM-CL2-004
201mm from RE

Coil SS 230

# L2-L3 Coil Radial Interface Variations were also analyzed

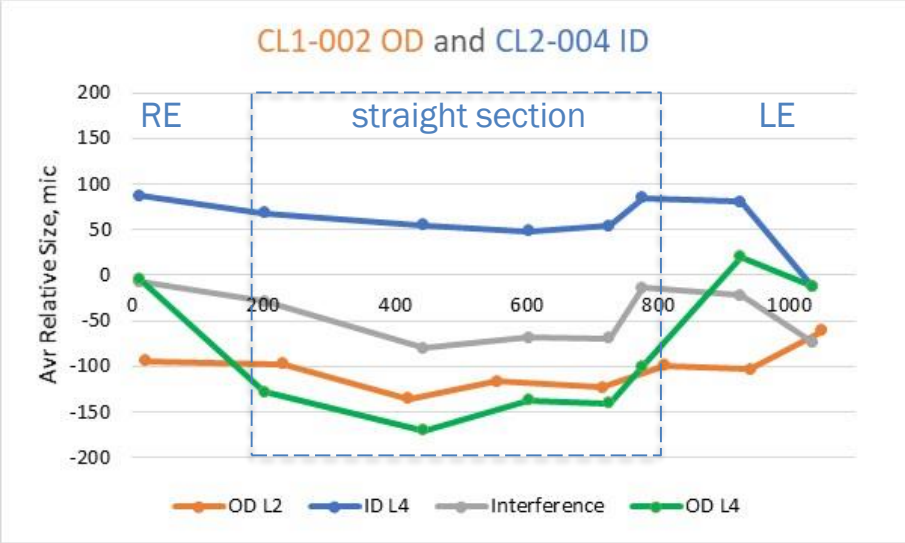


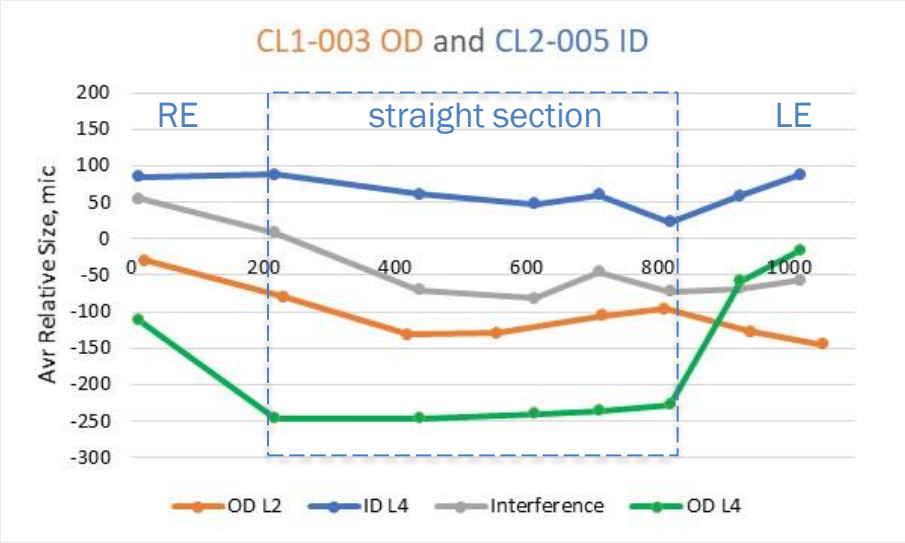

# L2-L3 Coil Radial Interface was checked using Fuji film

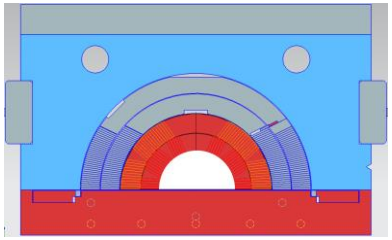

Impregnation tooling

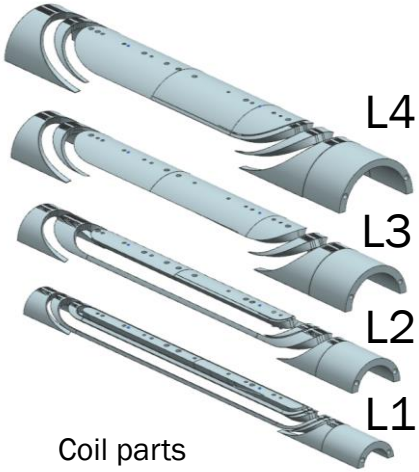


Coil parts and cross-section

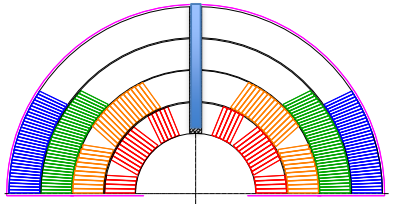

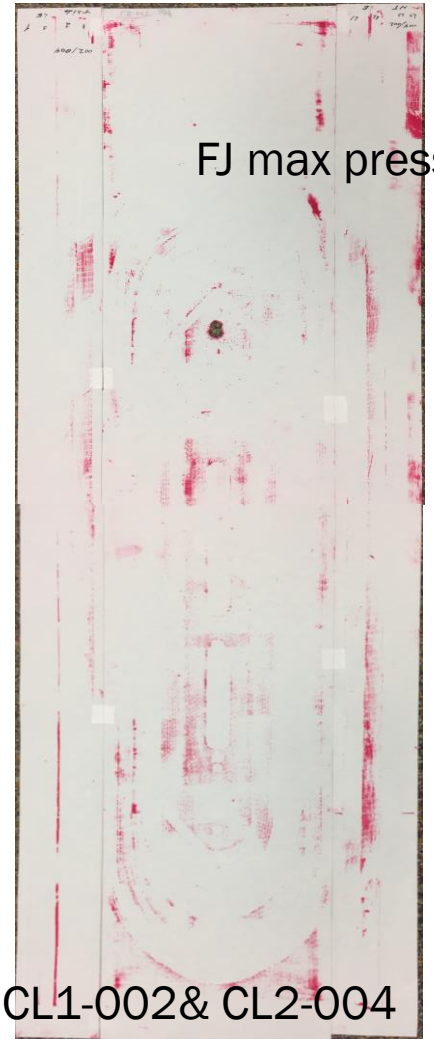

FJ max pressure = 10 MPa

CL1-002& CL2-004

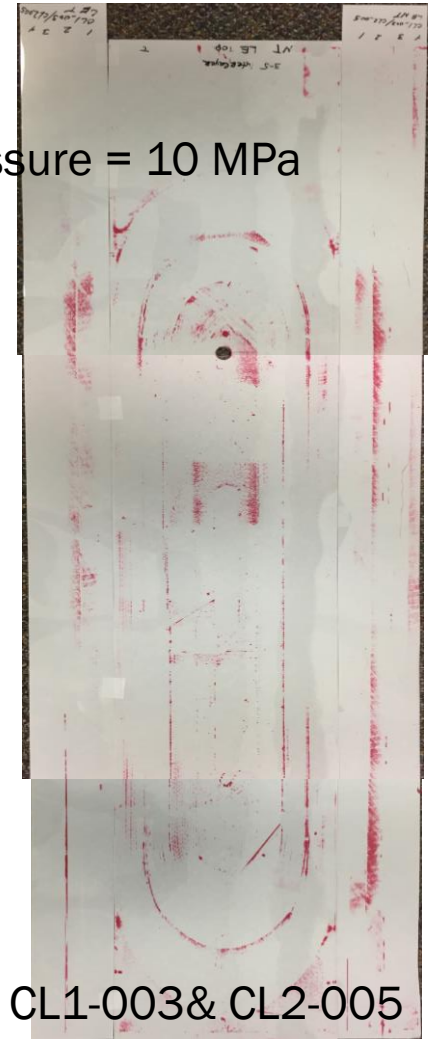

CL1-003& CL2-005

5mil Kapton with cuts for VTs

# Radial Shim Plan for the Coil Block was developed

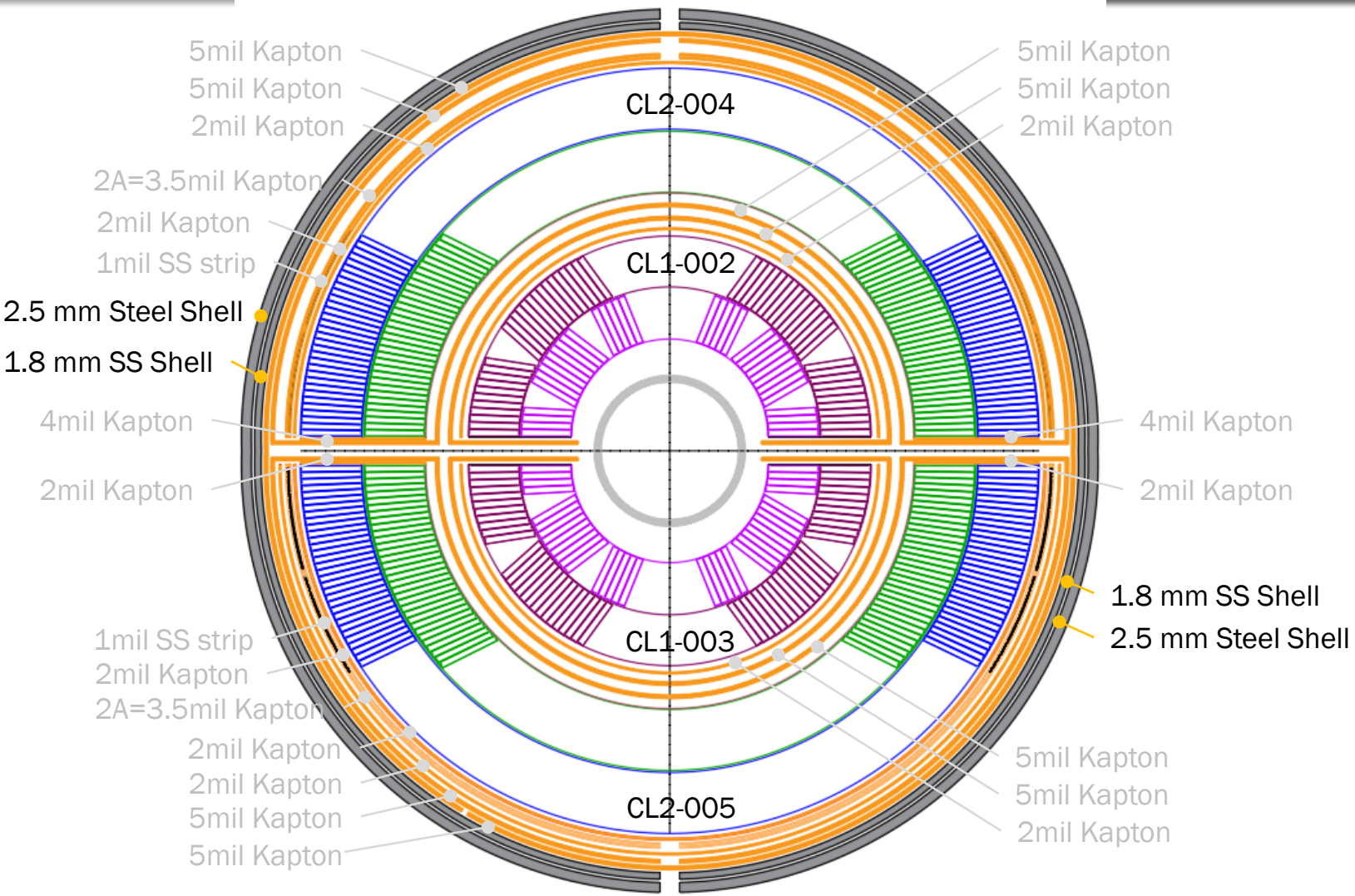

# GI Wrapping and Coil Block Yoking are done

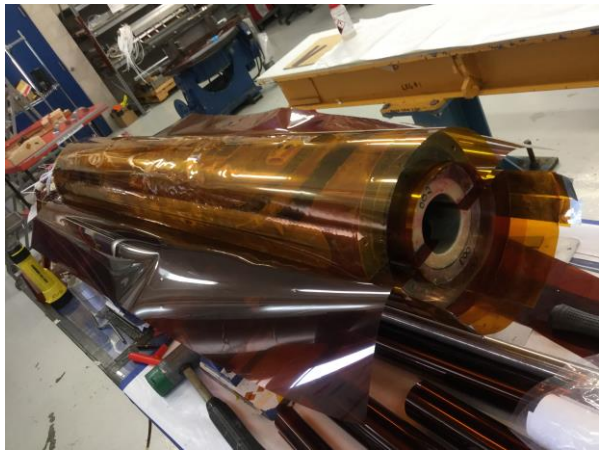
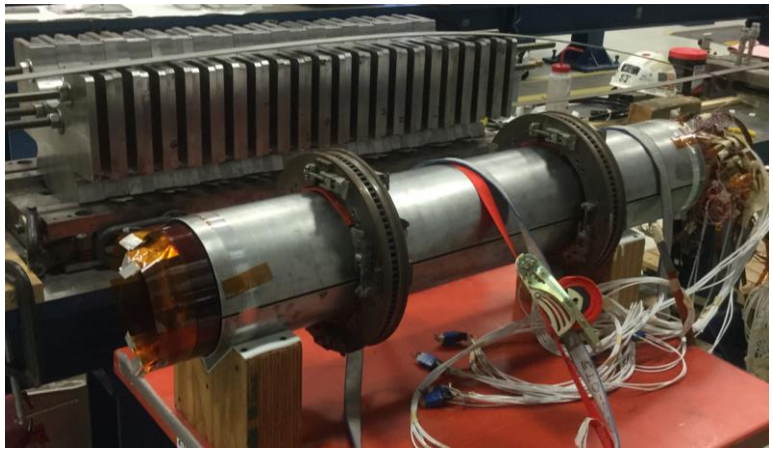

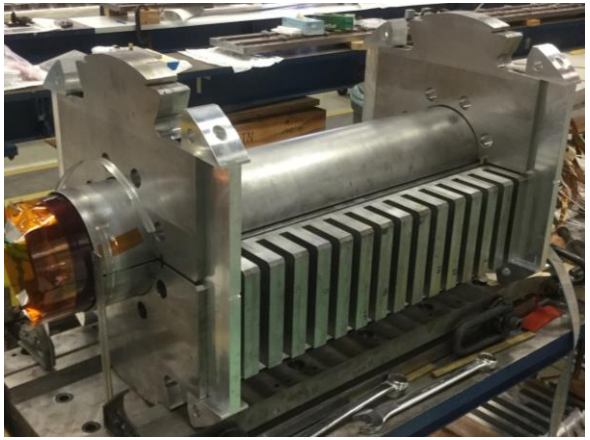

# Coil Massaging and Yoke Clamping is complete

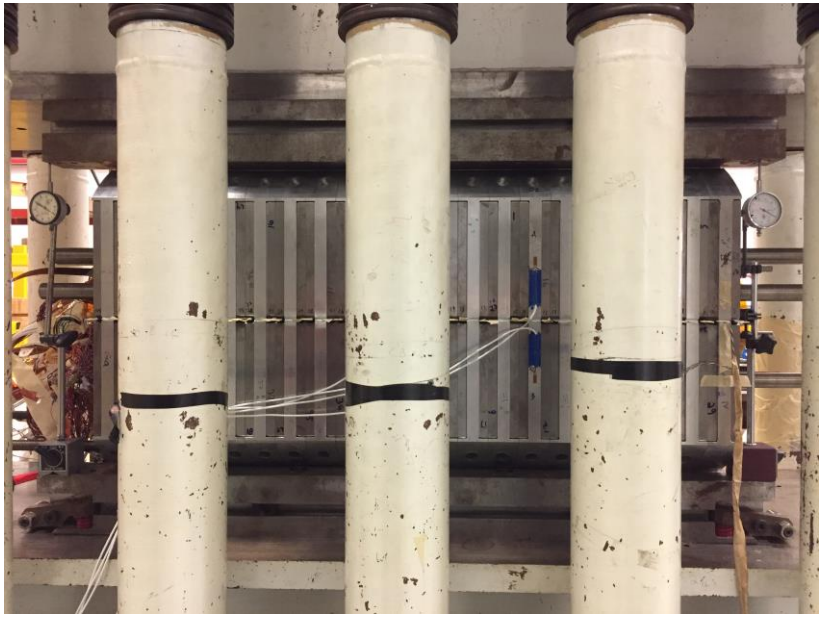

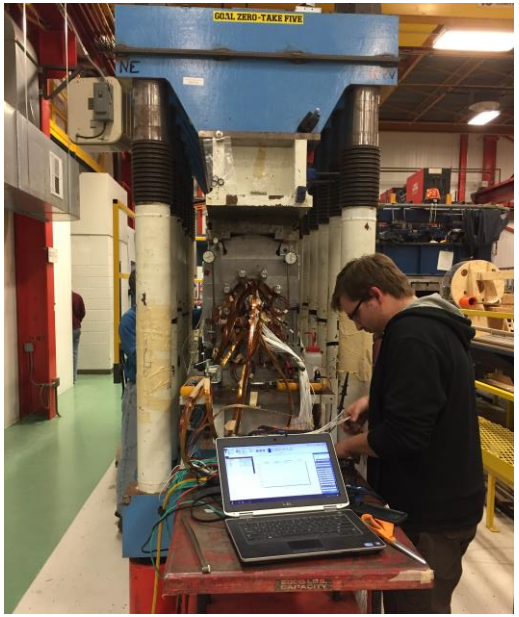


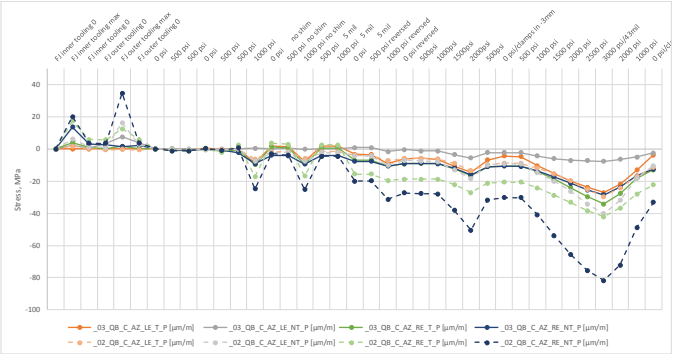


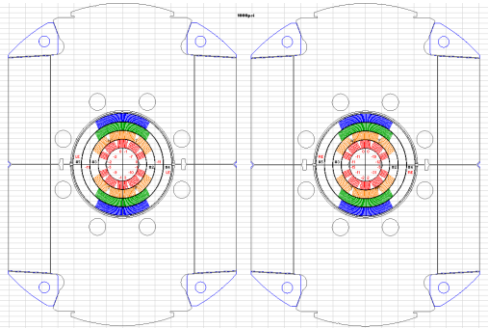

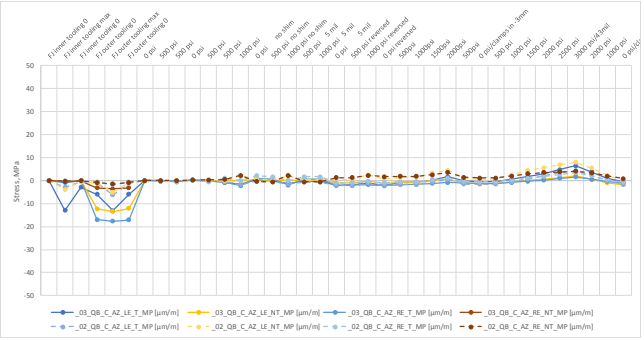

# Shell Welding tooling was fabricated and tested

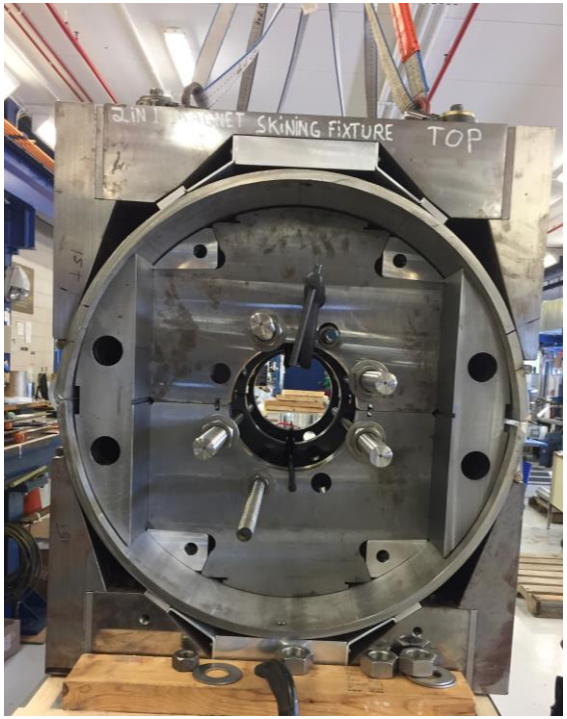


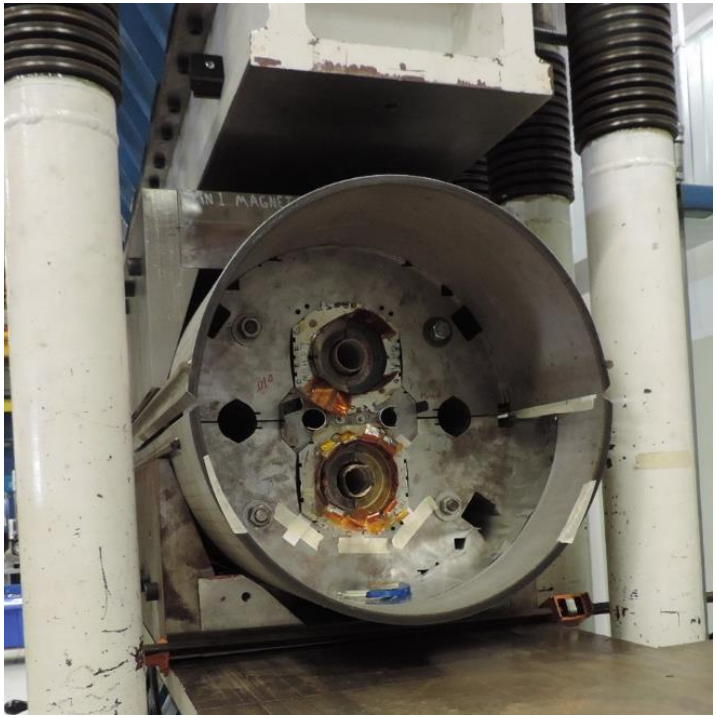

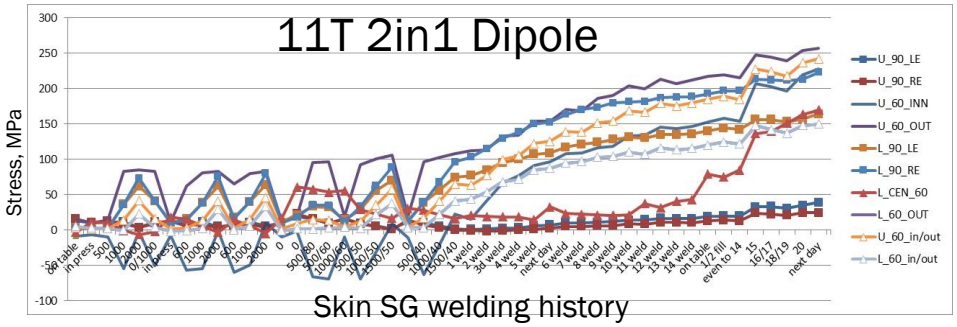

# End Loading and Leads Splicing plan

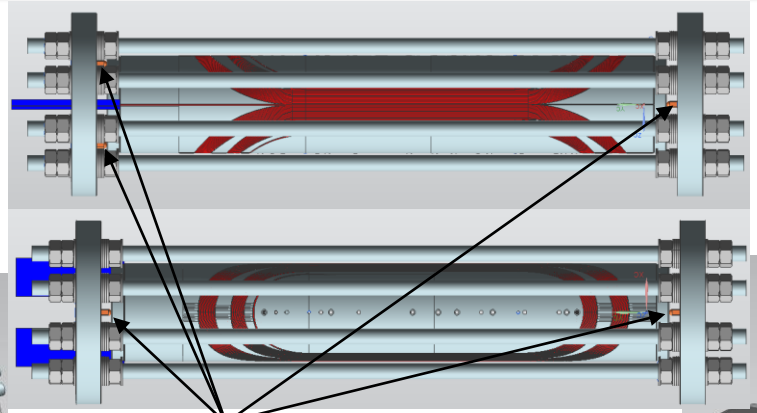


At 4K bullets are in contact with the coil ends

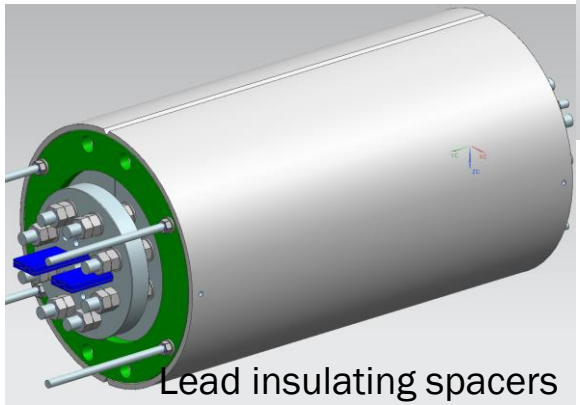

Lead insulating spacers

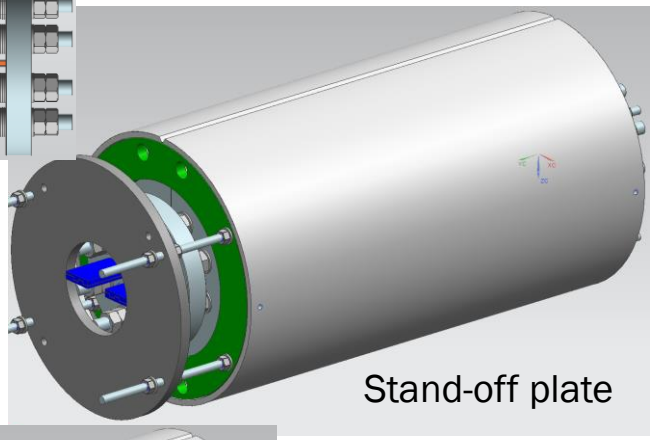

Stand-off plate

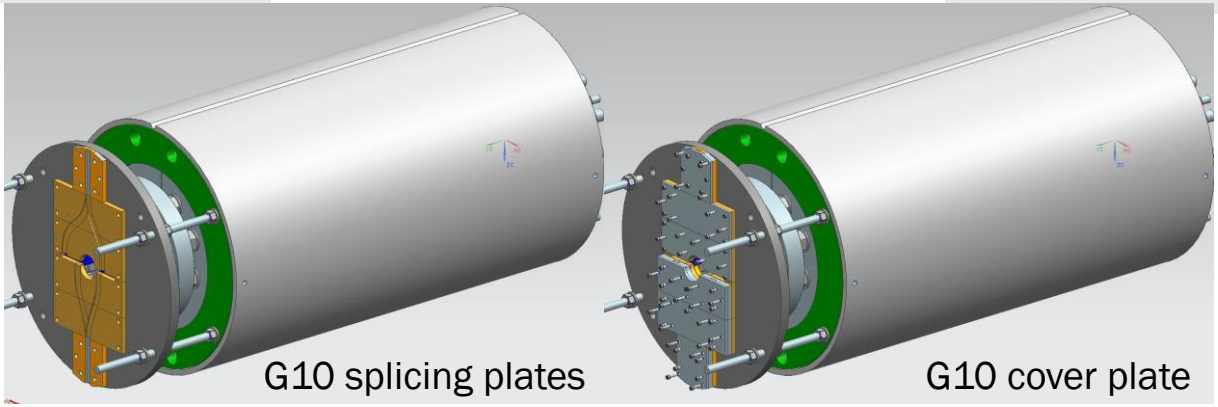

G10 splicing plates

G10 cover plate

# Adding Hypotronic connector and final electrical test are standard procedures

- All SG riding
- All VT's reading
- Hi-Pot Insulation check
- L/Q/R coils check
- Hypotronic connectors
- Power Leads insulation
- Mechanical measurements

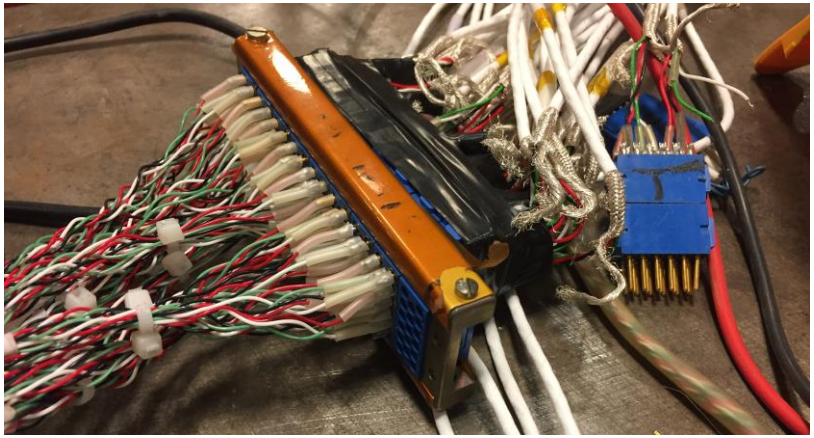

# Conclusions

- To reduce the risk of coil damage during assembly target prestress values  were limited by 150 MPa. The target field during the first test is 14 T
- Tests of mechanical models allowed to determine experimentally the limits of brittle Al clamps and Iron laminations. Based on that Al clamps were redesigned, fabricated and tested. Both clamps and Iron lams can safely operate up to ~17 T.
- Coil size data were measured and their impact on the interfaces analyzed.
- Assembly of 15 T dipole demonstrator is in progress and will be completed in early March.