Purity Monitors for Single-Phase ProtoDUNE

Casandra Morris (on behalf of the DUNE Collaboraton)
University of Houston

DEEP UNDERGROUND NEUTRINO EXPERIMENT

ProtoDUNE Single-Phase (SP)

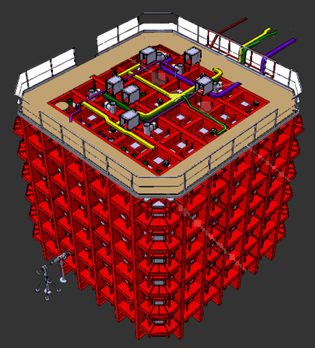

- ProtoDUNE is largest liquid argon (LAr) time projection chamber (TPC) built to date, with a 0.77 kt LAr mass and active volume of 6m x 7m x 7.2m
- It lives at CERN and serves as a prototype for the far detector design for DUNE.
- ProtoDUNE's LAr mass is at a ~1:20 scale with the future DUNE far detector module but the components are at a 1:1 scale.
- Construction of ProtoDUNE was finished in August 2018 and beam data was collected between September and November 2018. Cosmic data has been taken since.

Purity Monitors

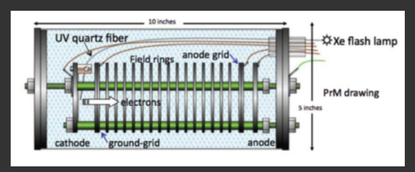

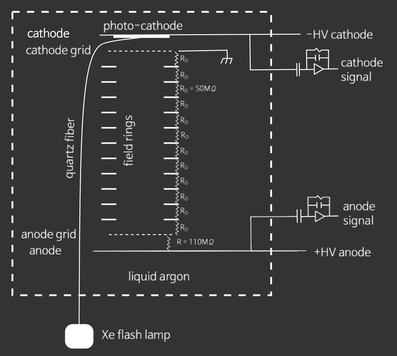

- The purity monitor is a mini-TPC that measures the lifetime of UV electrons.
- Electrons are generated using a Xe flash lamp (located outside of the cryostat and fed in thoug quartz fibers) via the photoelectric effect on stainless steel cathode ring and drifted through stainless steel field shaping rings to a stainless steel anode ring, all within a Faraday cage.
- A signal from the electrons is read out from the cathode(Q_C) and anode (Q_A) rings. The drift region is shielded from the anode and cathode rings with grid rings on either side to isolate the signals. These signals are then fed into two charge amplifiers in a purity monitor electronics module. The electron lifetime τ can be found from the ratio of these signals $Q_A/Q_C=e^{-t/\tau}$

References

-arXiv:1706.07081v2 [physics.ins-det] -arXiv:1403.7236v1 [physics.ins-det]
-M. Adamowski et al., The Liquid Argon Purity Demonstrator, JINST 9, P07005 (2014)

Liquid Argon (LAr) in a TPC

- One of the reasons why LAr is such an attractive material to be used in a TPC is its electron mobility, however in large TPC the purity of the LAr is crucial.
- An electron's drift, measured in terms of its lifetime, in the LAr is inversely proportional to the contamination of the LAr
- Liquid argon needs to be purified to ~0.1ppb of O_2 for ~m drift, corresponding to ms electron life times
- ProtoDUNE has 3 purity monitors installed at heights of 1.8m, 3.7m, 5.6m from the floor

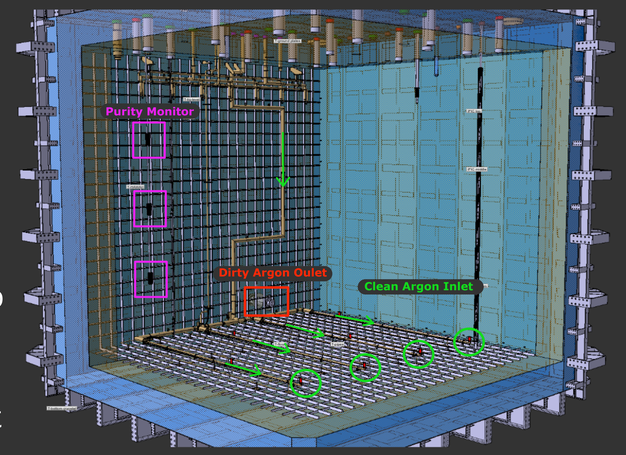

Performance

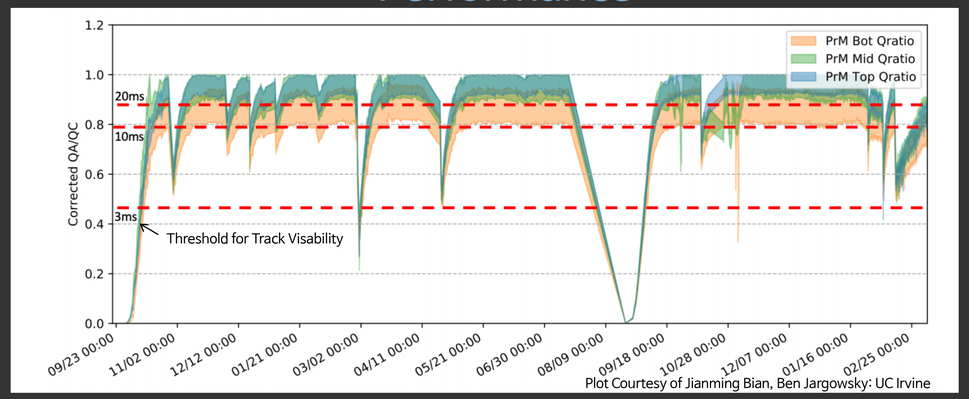

Plot Courtesy of Jianming Bian, Ben Jargowsky: UC Irvine

- The top and middle purity monitors have seen lifetimes of 〉20ms and the bottom has seen lifetimes of 〉10ms, the differences in lifetime hints purity stratification but need to improve measurement uncertainty to verify. The dips show sudden changes in purity caught by the purity monitors, mitigating potentially serious consequences for the data taking ability of the detector.
- Uncertainties includes statistical and time dependent fluctuations and uncertainties of grid transparency, others uncertainties found to be small.Overall uncertainty on purity monitor Q_A/Q_C measurement is ~5%.
- These lifetimes demonstrate the high LAr purity that will be required in the DUNE far detector modules.