RAL Target Options: G4LBNF Simulations

John Back

University of Warwick

20 Dec 2018

DUNE-doc-12247

Introduction

- `G4LBNF` target simulations, using 3 horn set-up from Laura Fields' optimization work; Geant v4.10.3
- RAL designs for graphite cylinder target & helium cooling
  - Single cantilever option: target $L = 1.5\,\mathrm{m}$
  - Downstream support: target $L = 1.5\,\mathrm{m}$ to $2.3\,\mathrm{m}$ (R. Zaki: DUNE-doc-8888)
  - Double target: two $L \approx 1\,\mathrm{m}$ sections (new)
- Looking at CP sensitivity and neutrino fluxes (vs target length L)
  - Target radius fixed at $r = 8\,\mathrm{mm}$; smallest value possible for engineering
  - Proton beam: $p = 120\,\mathrm{GeV/c}$, $\sigma_R = \frac{1}{3}r = 2.67\,\mathrm{mm}$ (Gaussian)

Geometry for single cantilever, target $L = 1.5\,\mathrm{m}$

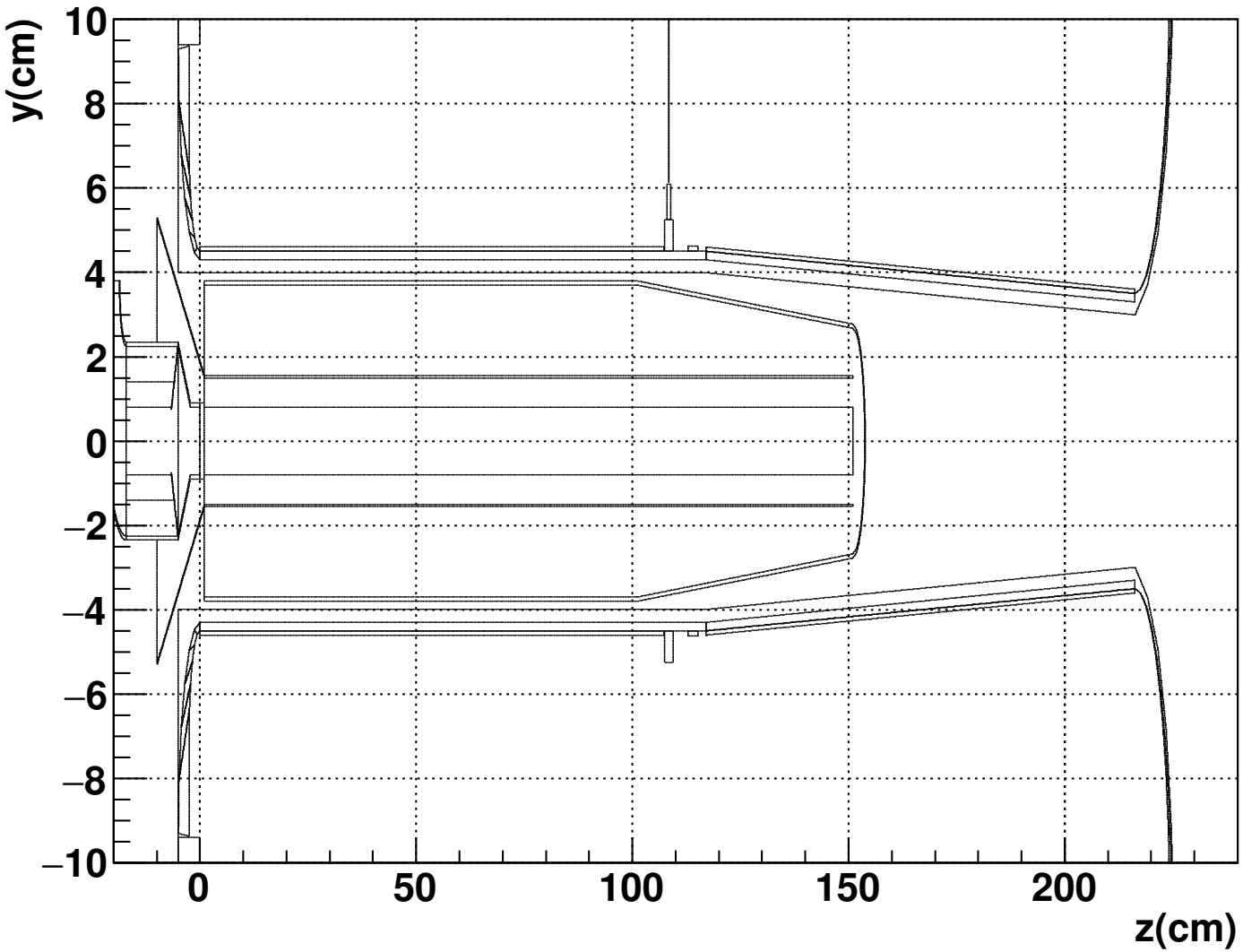

Geometry with downstream support, target $L = 1.5$ m ("short")

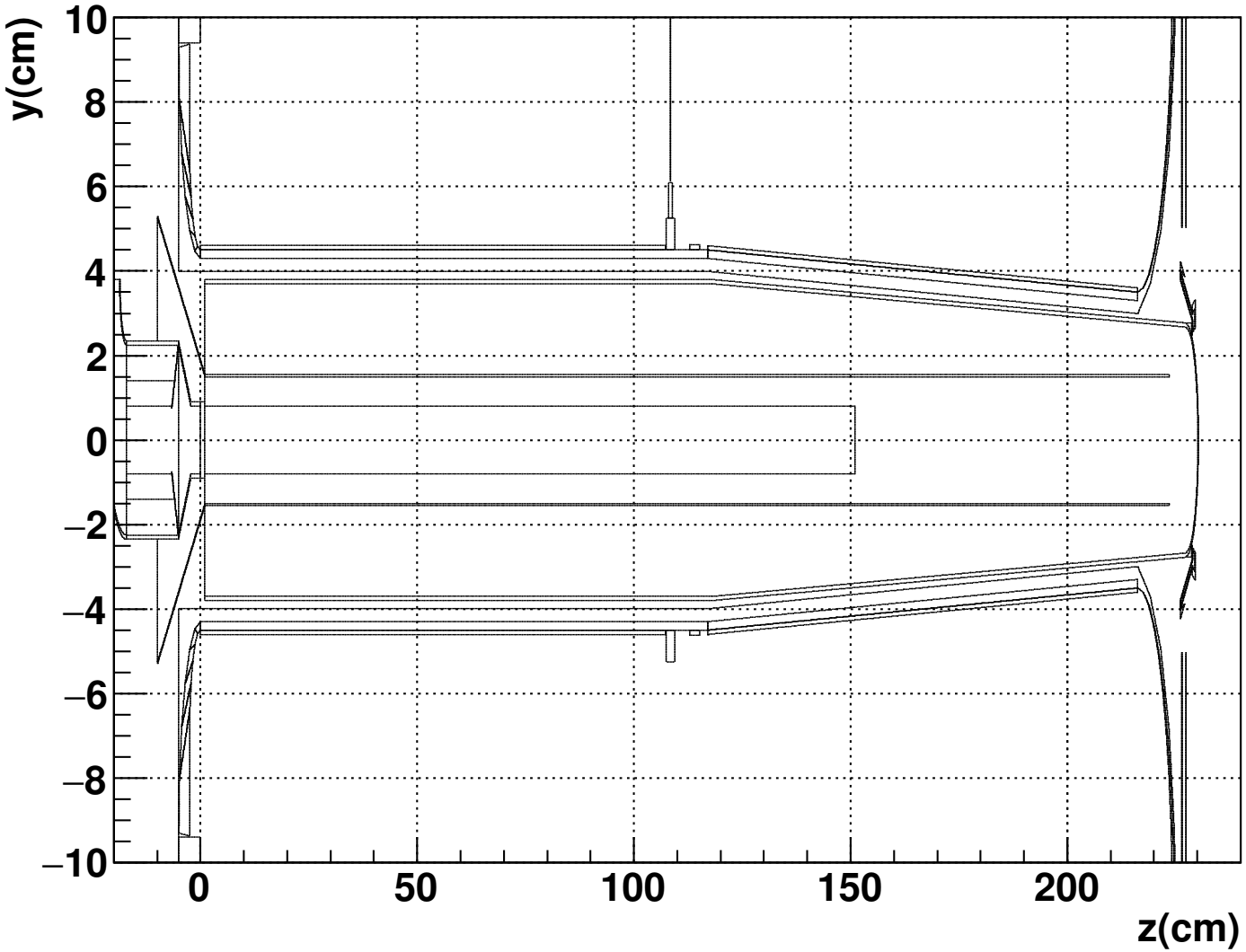

Geometry with downstream support, target $\boldsymbol{L} = \mathbf{2.2}\,\mathrm{m}$ ("long")

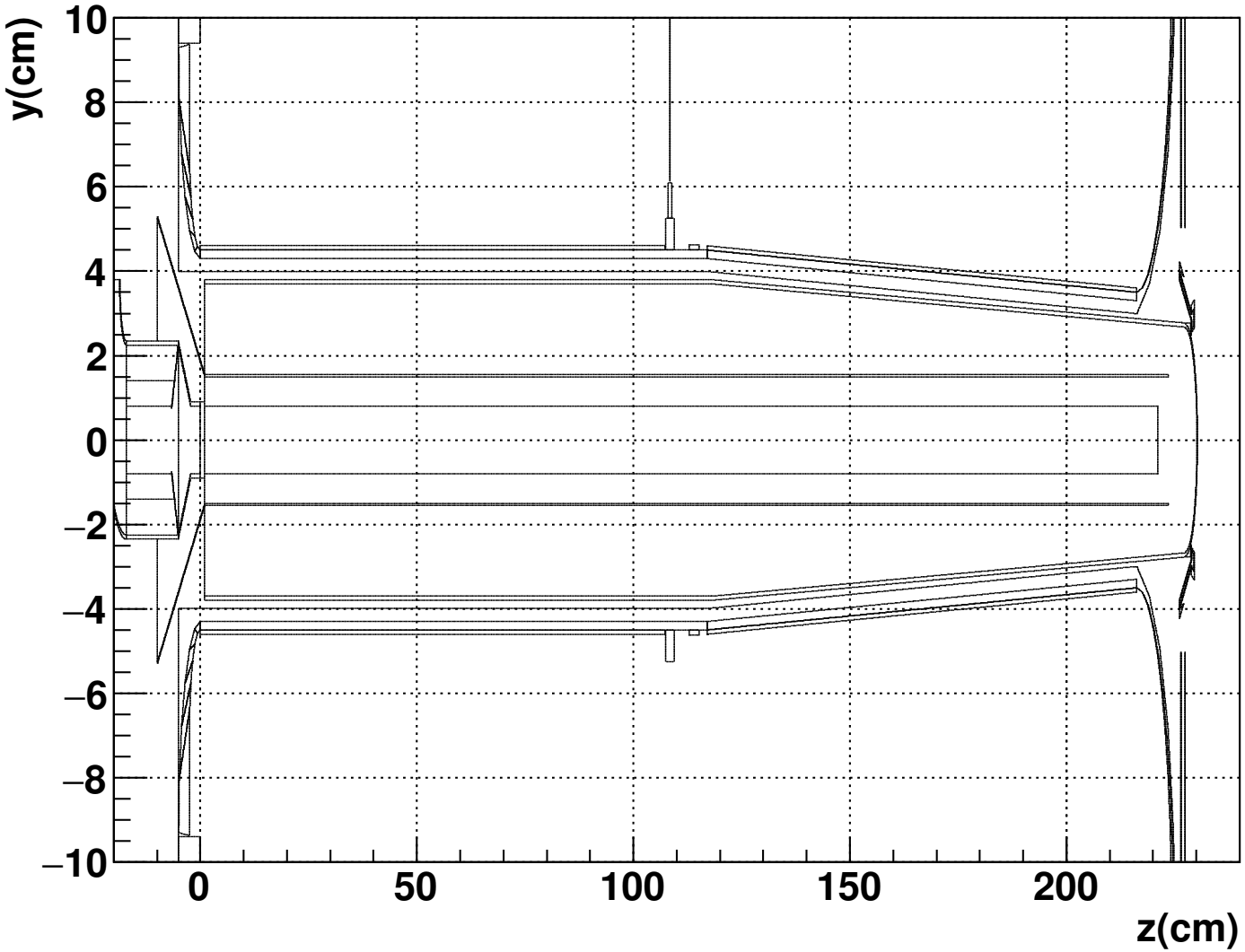

Double target concept: z-y and x-y views

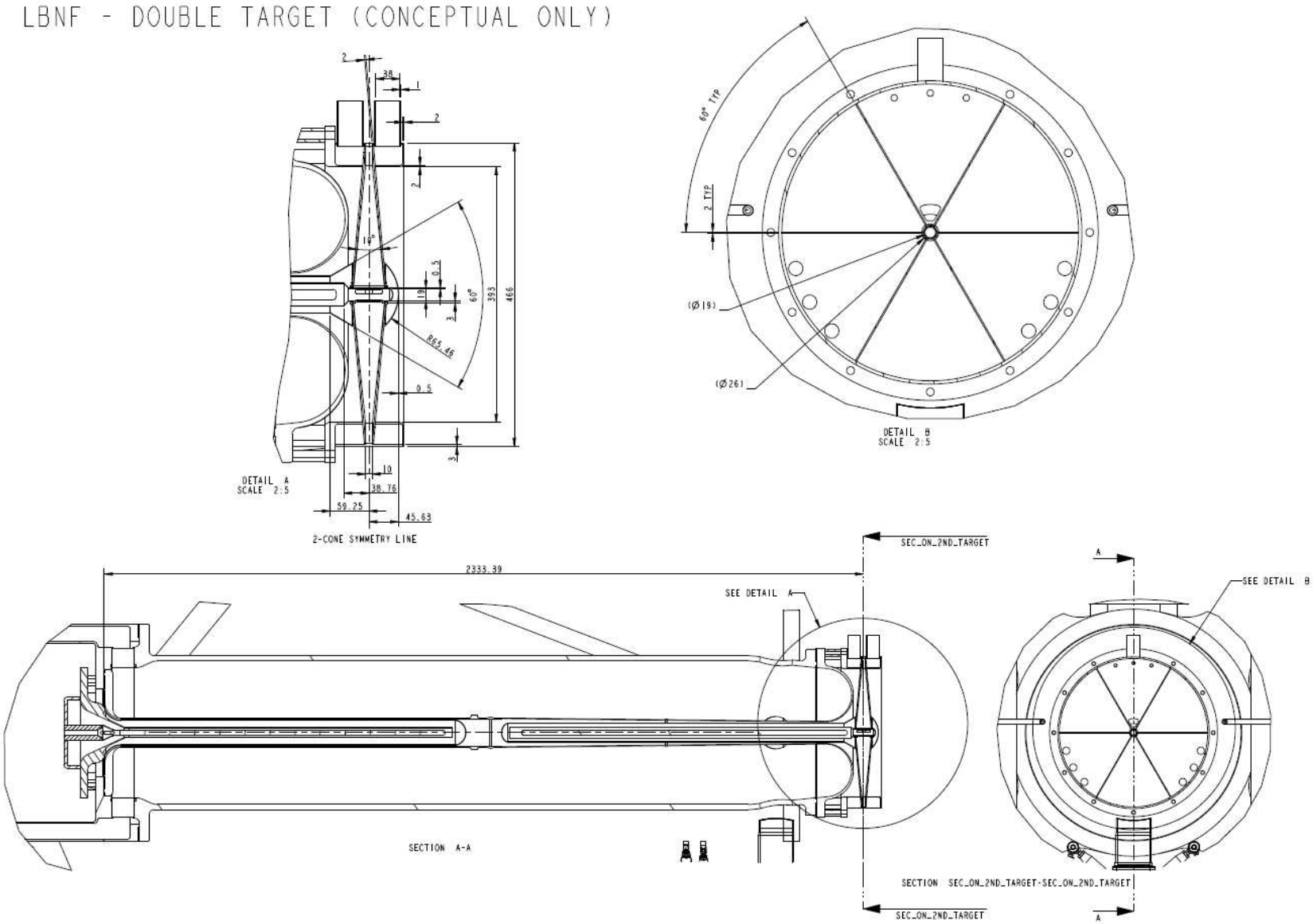

Double target downstream section

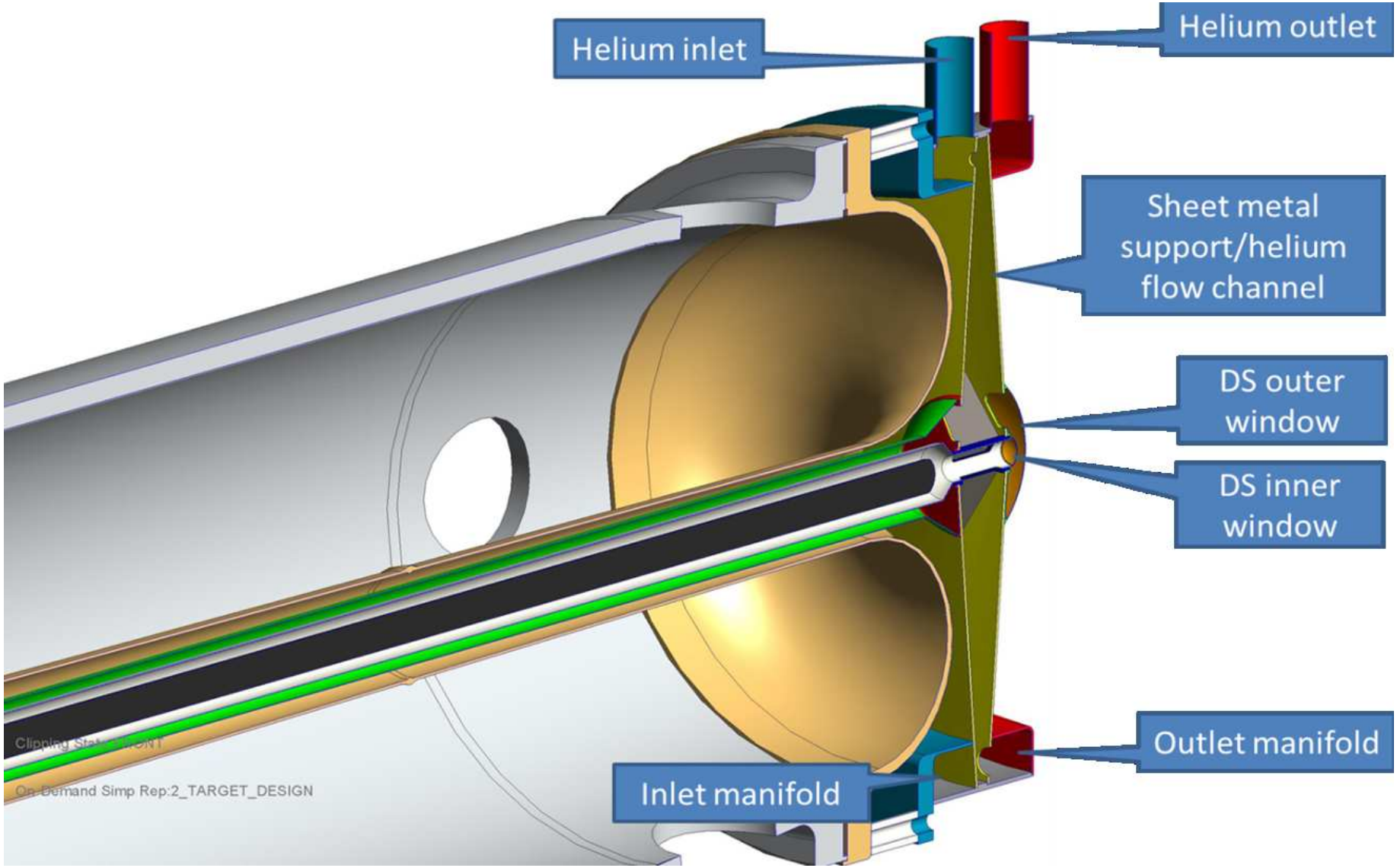

Double target: sheet & web support detail

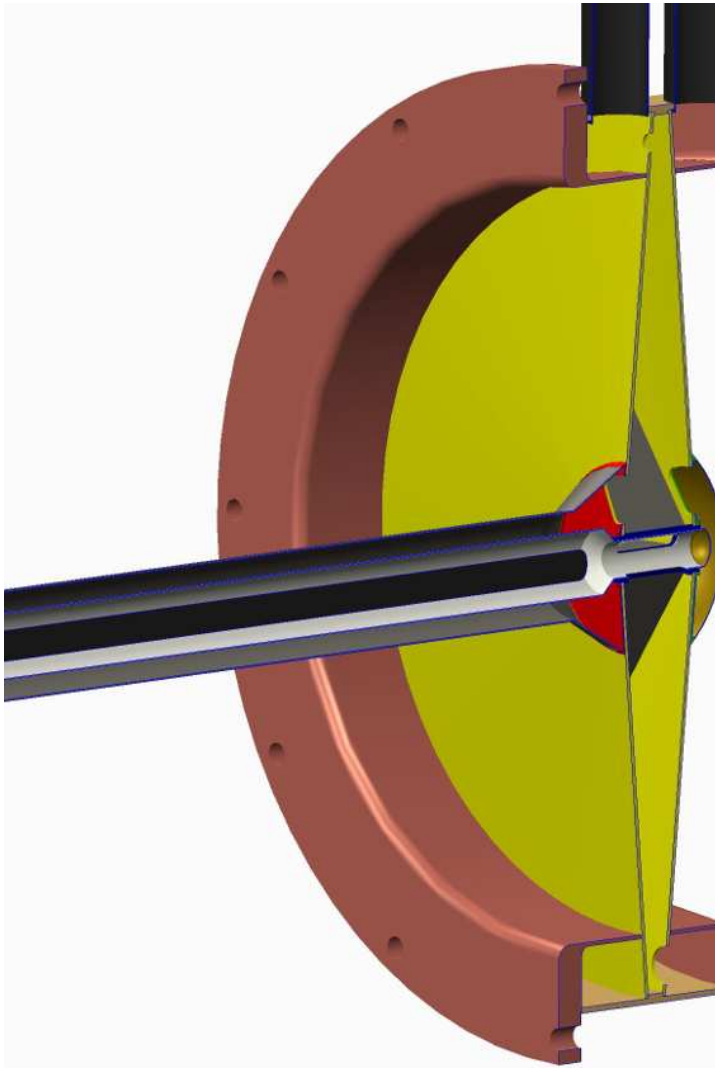

2 mm thick Ti (grade 5): conic sheets (front & back) & web support (60 deg)

Geant4 geometry for double target

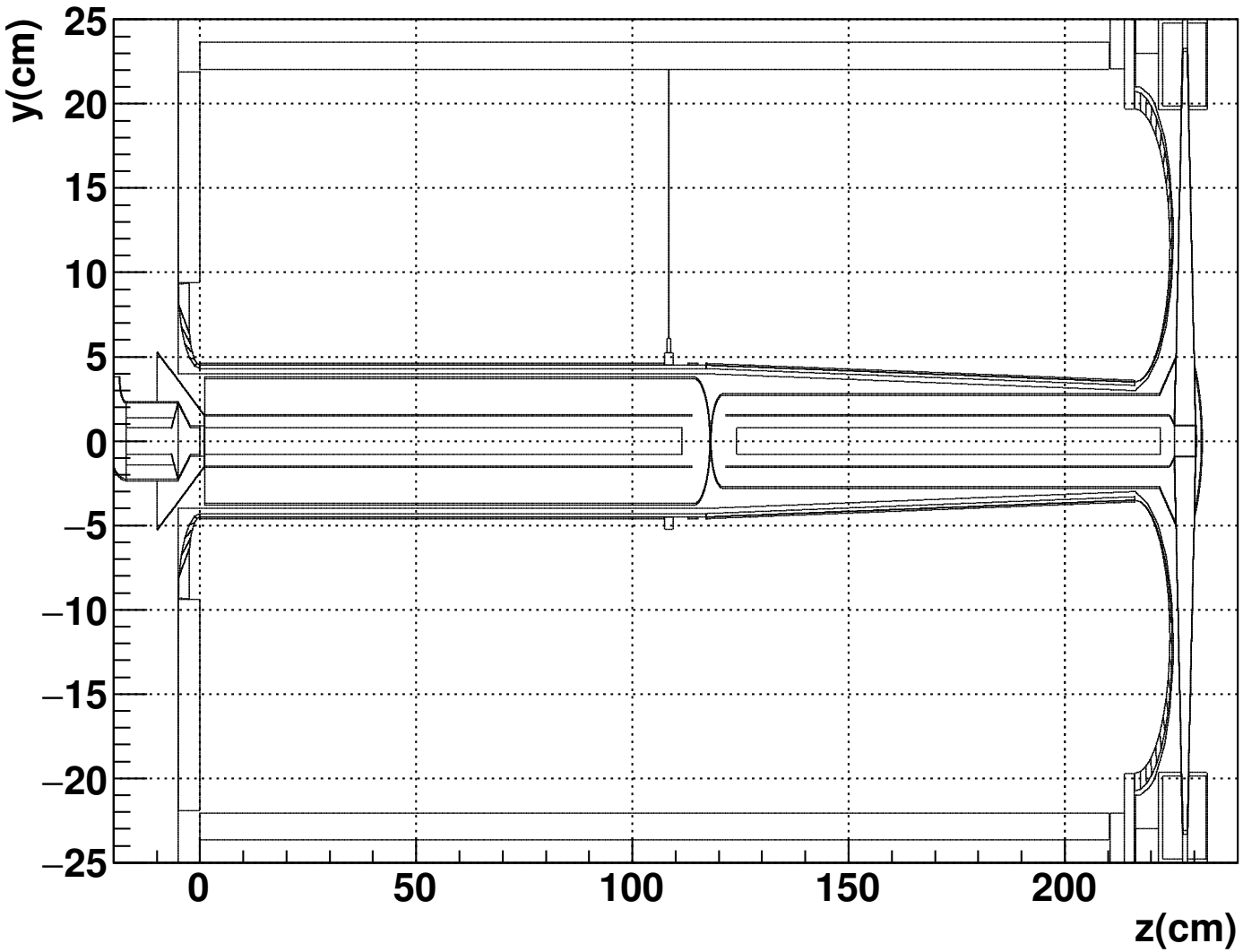

Geometry for double target: mid-section

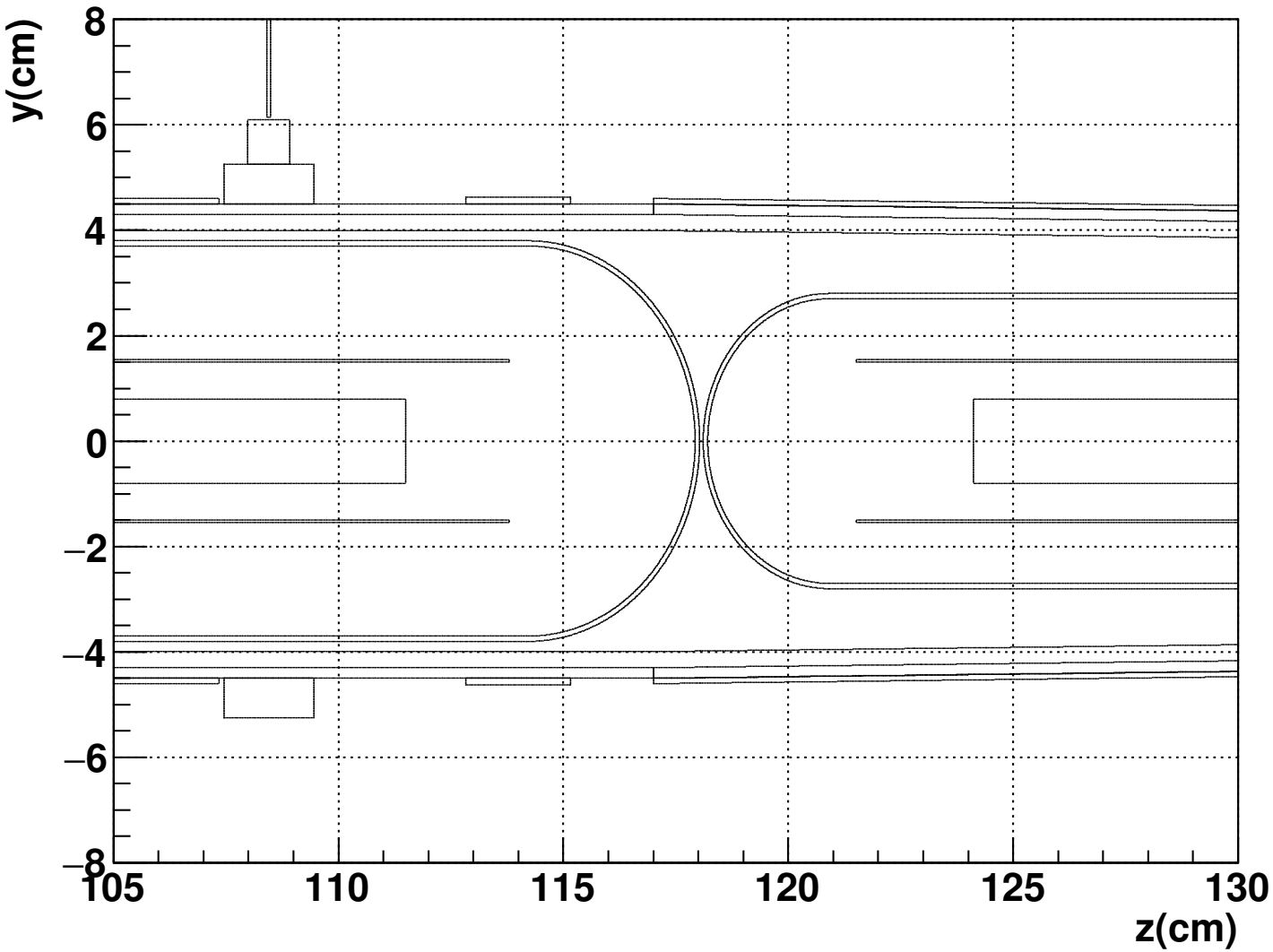

Geometry for double target: end-section

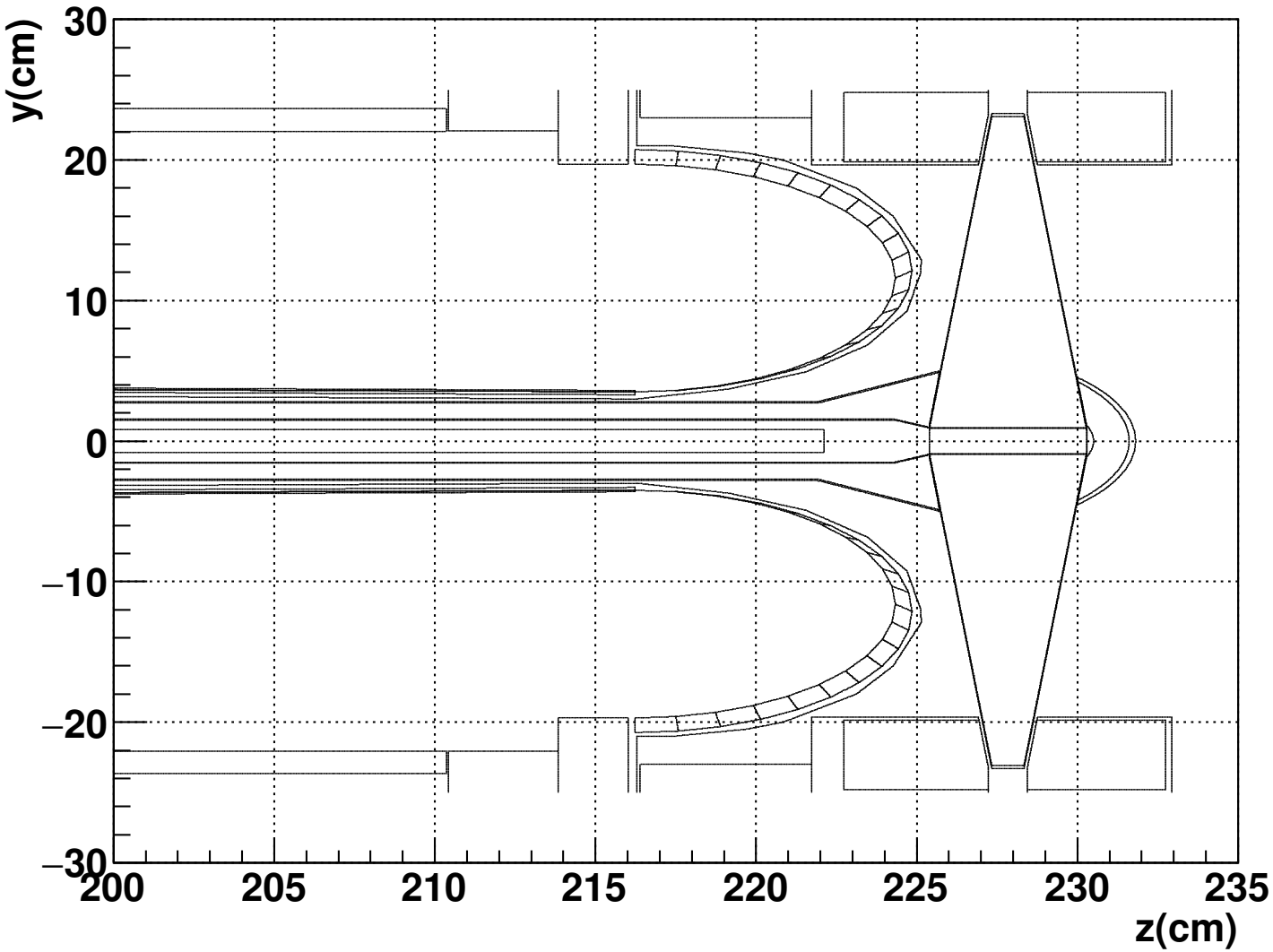

Geometry for double target: x-y view of 6 web manifold

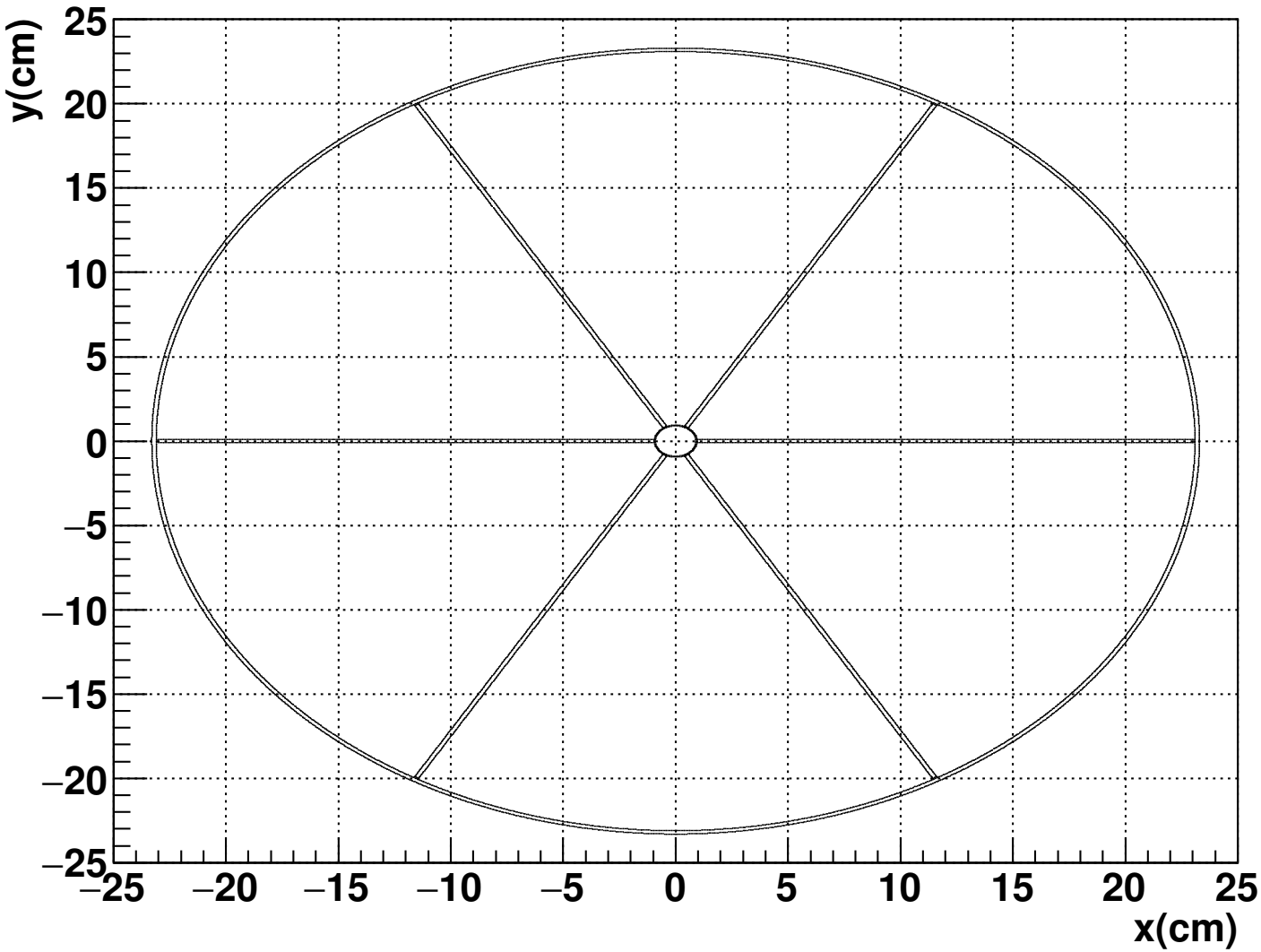

CP sensitivity versus target length

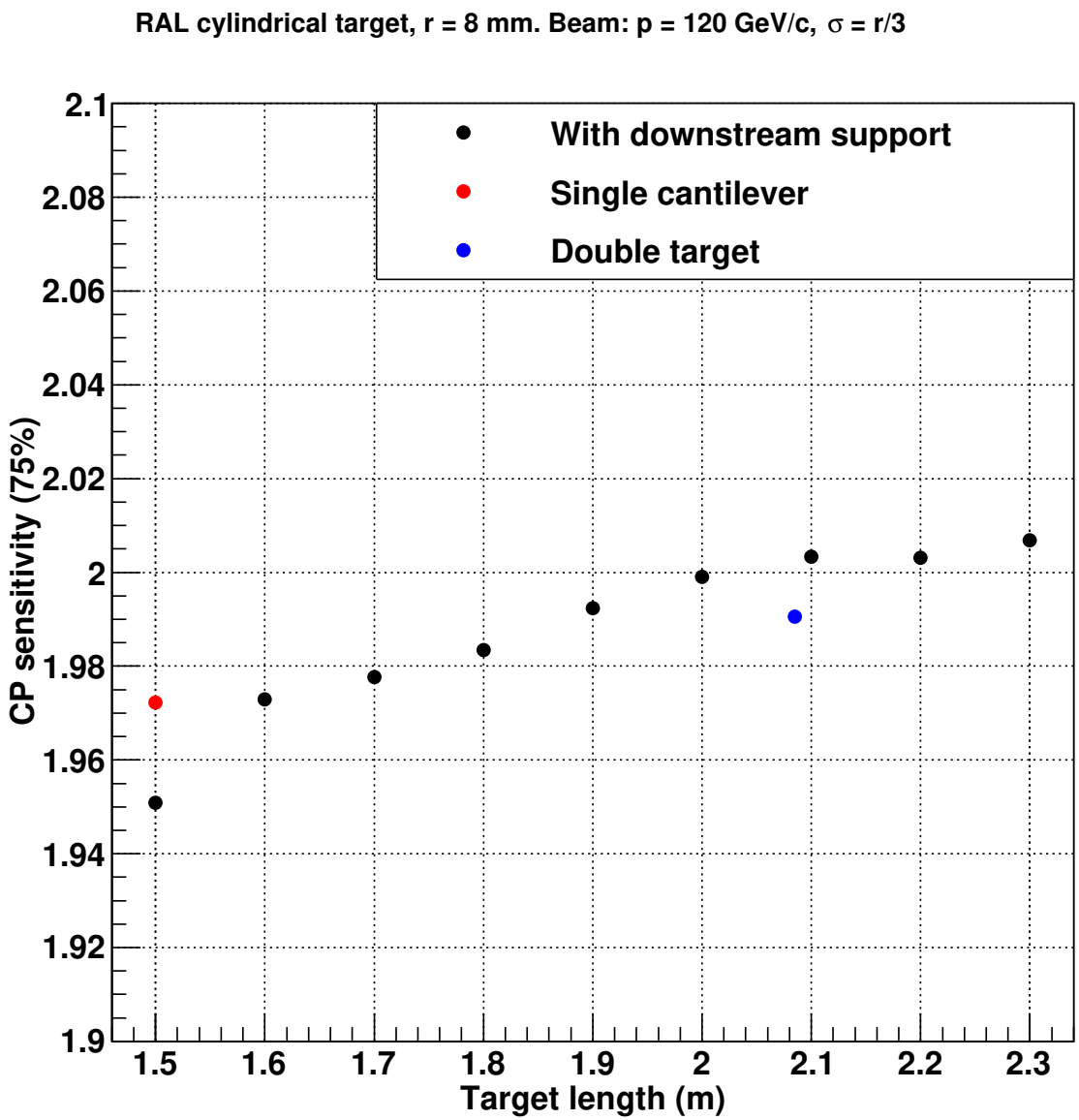

Neutrino running: signal muon neutrino flux

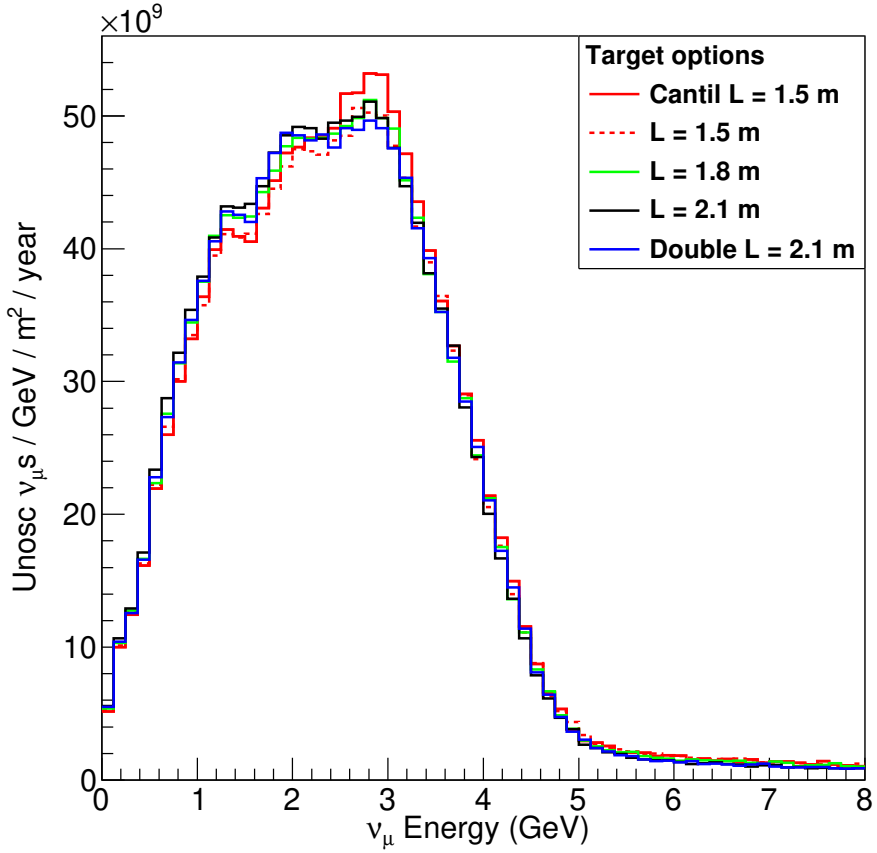

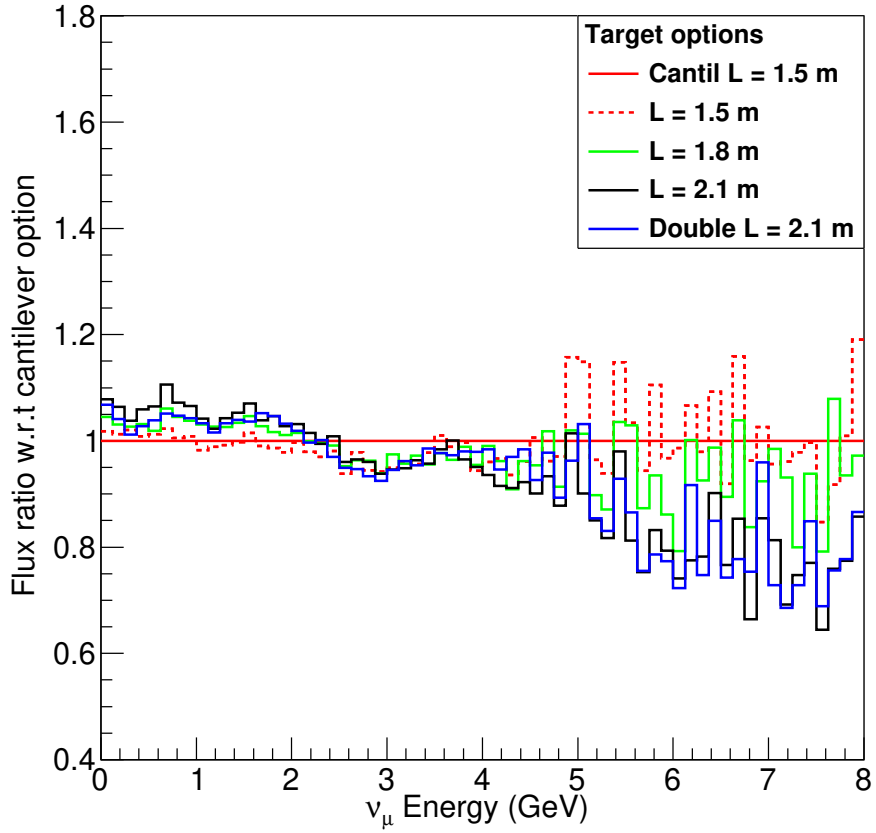

Single upstream cantilever option: Cantil L = 1.5 m

Double target: Double L = 2.1 m

Others: 1 target with downstream support: L = 1.5, 1.8 & 2.1 m

Left: Flux spectrum, Right: Bin-by-bin flux(downstream)/flux(cantilever)

Antineutrino running: signal muon antineutrino flux

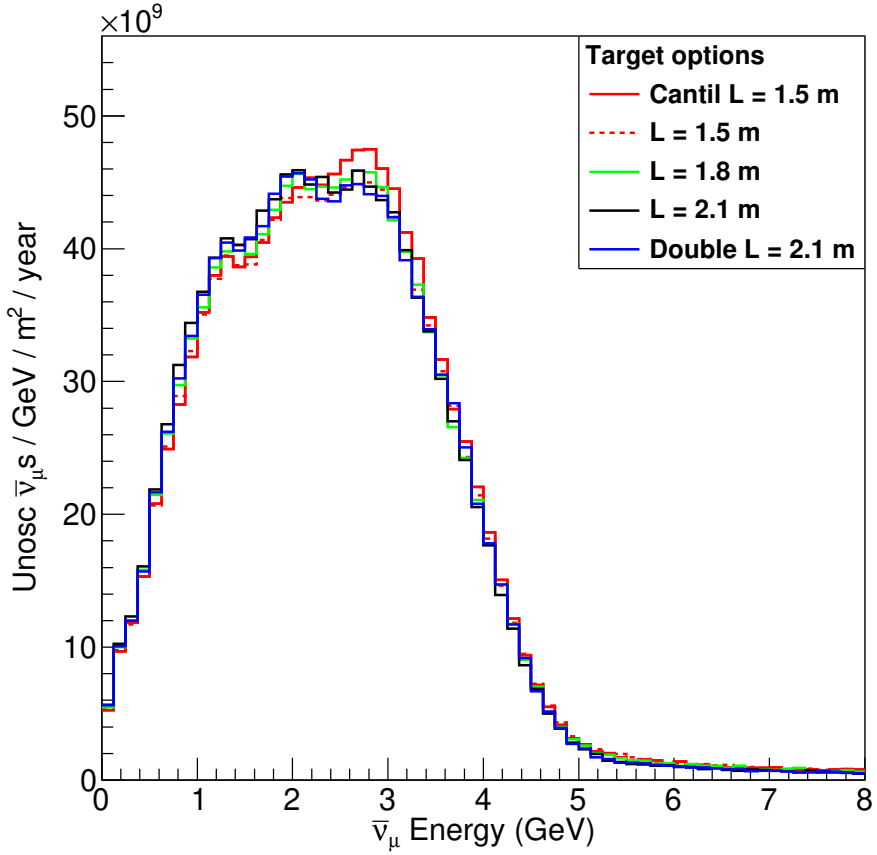

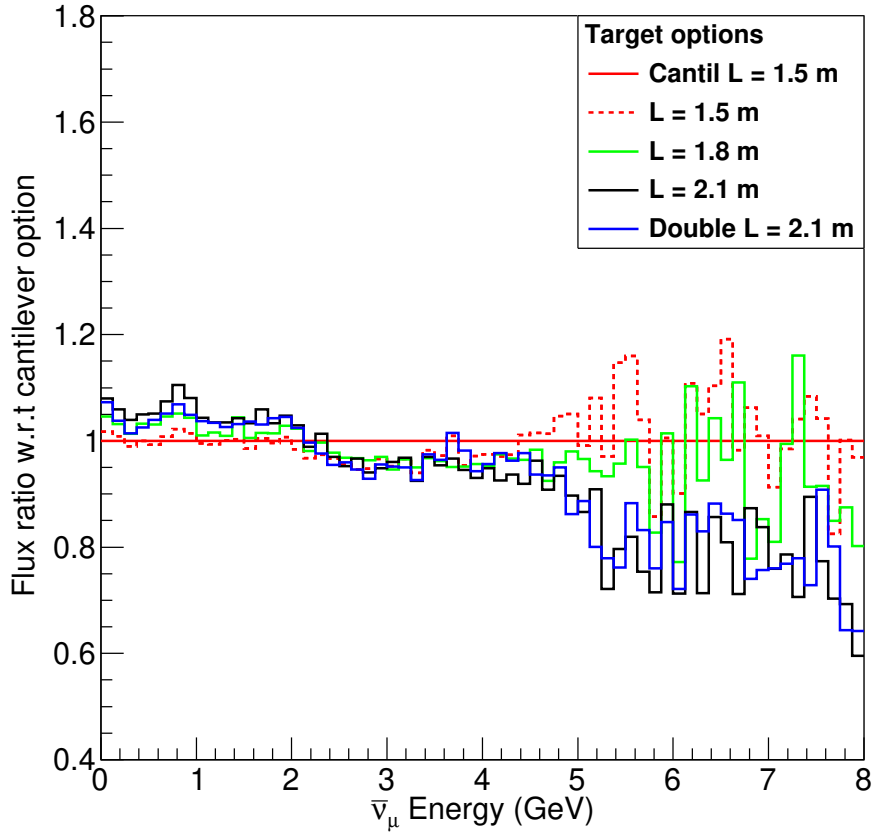

Single upstream cantilever option: Cantil L = 1.5 m

Double target: Double L = 2.1 m

Others: 1 target with downstream support: L = 1.5, 1.8 & 2.1 m

Left: Flux spectrum, Right: Bin-by-bin flux(downstream)/flux(cantilever)

Neutrino running: bkgnd antimuon neutrino flux

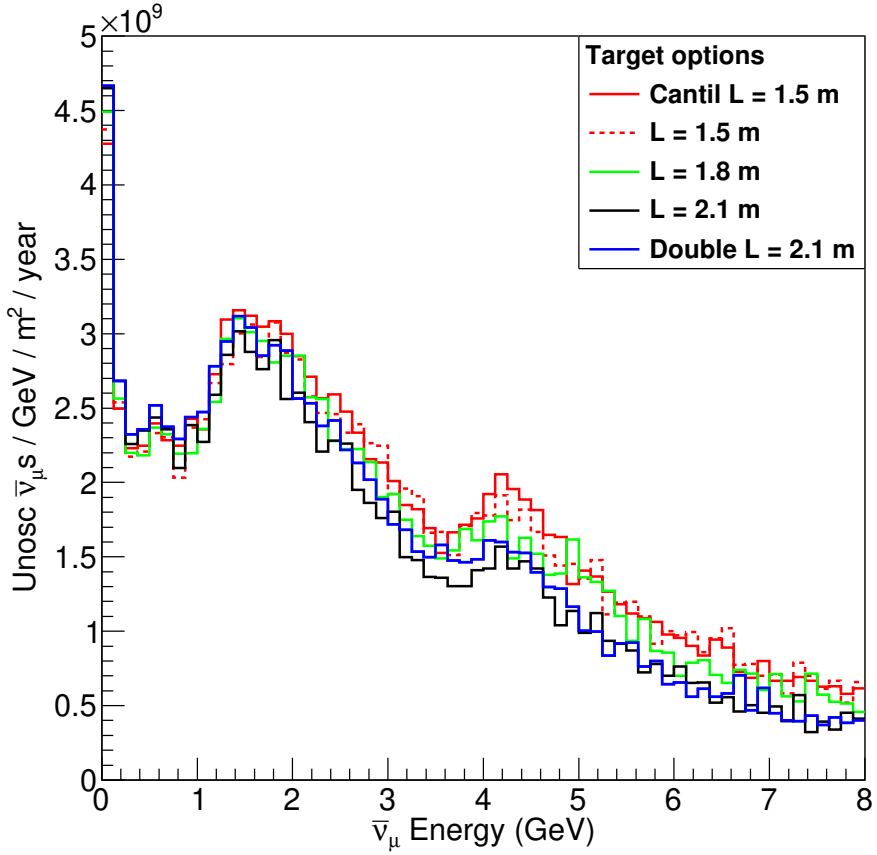

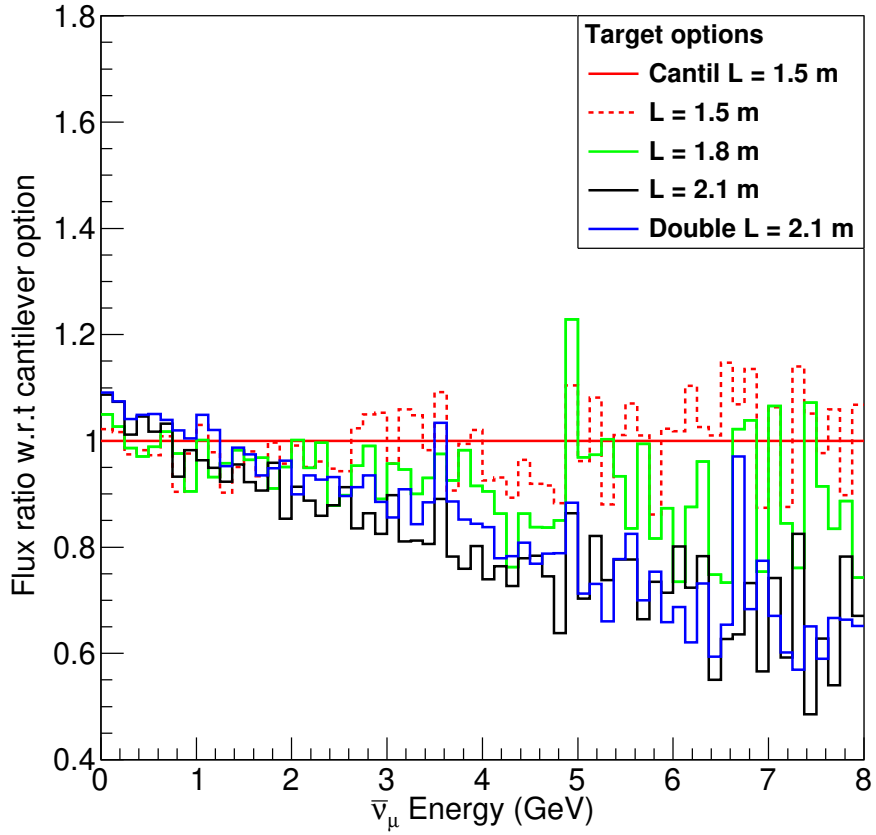

Single upstream cantilever option: Cantil L = 1.5 m

Double target: Double L = 2.1 m

Others: 1 target with downstream support: L = 1.5, 1.8 & 2.1 m

Left: Flux spectrum, Right: Bin-by-bin flux(downstream)/flux(cantilever)

Antineutrino running: bkgnd muon neutrino flux

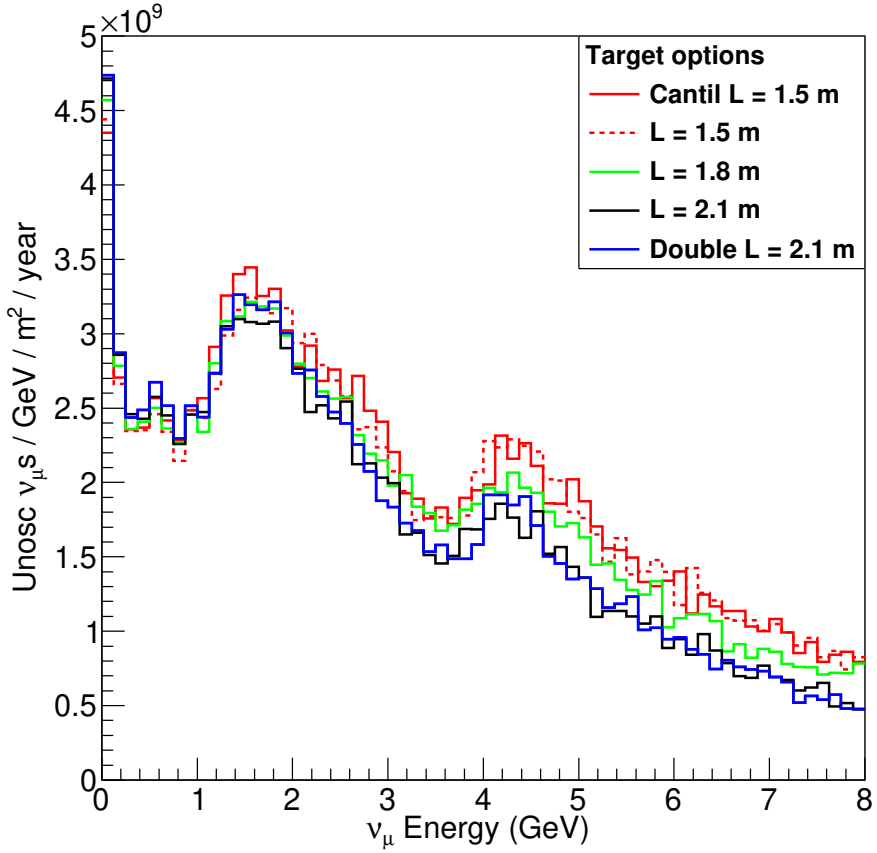

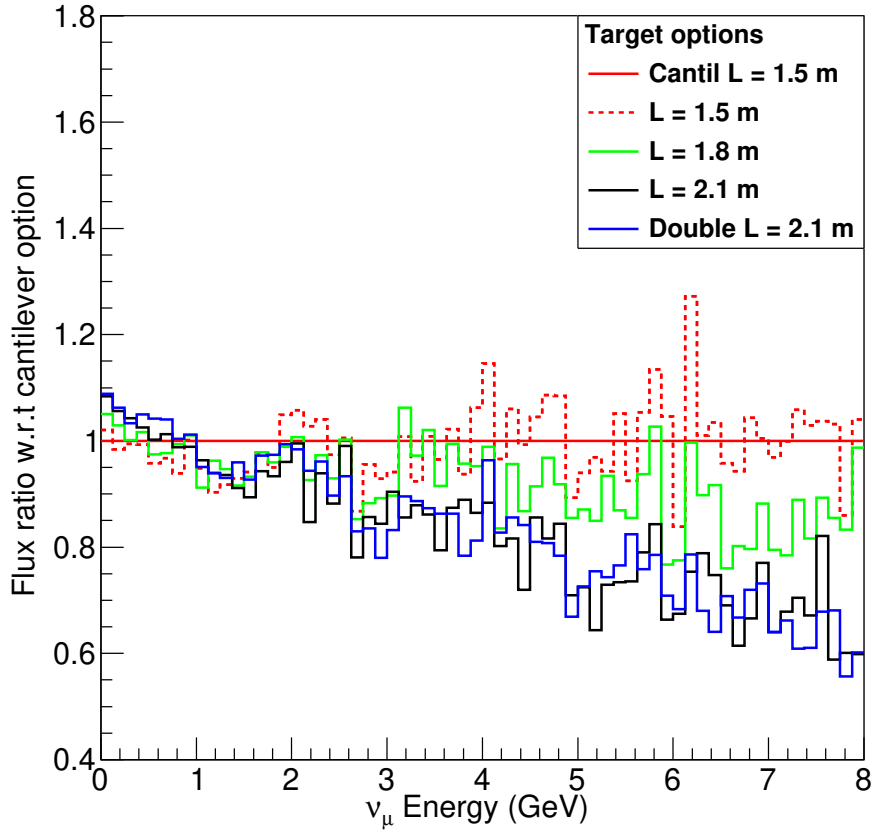

Single upstream cantilever option: Cantil L = 1.5 m

Double target: Double L = 2.1 m

Others: 1 target with downstream support: L = 1.5, 1.8 & 2.1 m

Left: Flux spectrum, Right: Bin-by-bin flux(downstream)/flux(cantilever)

Summary

- Longer target provides slightly higher CP sensitivities, with higher signal ν_μ & lower $\bar{\nu}_\mu$ background fluxes
- Single cantilever option ($L = 1.5\,\mathrm{m}$, easier engineering design) gives $\sim 98\%$ of the CP sensitivity of $L \approx 2.1\,\mathrm{m}$ with downstream support
  - Signal ν_μ flux reduced by $\sim 5\%$ for $E_\nu \lesssim 2\,\mathrm{GeV}$
  - Signal ν_μ flux increased by ~ 2–4% for $2 < E_\nu \lesssim 4\,\mathrm{GeV}$
  - Background $\bar{\nu}_\mu$ fluxes for $E_\nu \gtrsim 1\,\mathrm{GeV}$ increased
- Double target $L = 2.1\,\mathrm{m}$ performance similar to $L = 1.9\,\mathrm{m}$ single target
  - $\sim 99\%$ of the CP sensitivity of $L \approx 2.1\,\mathrm{m}$ (with downstream support)
  - π through metal sheets: $\approx 4\,\mathrm{mm}$ Ti $\Rightarrow 1.4\%$ of an interaction length
  - Downstream Ti on-axis is a good target material
    - See hybrid target studies: DUNE-doc-2437

Downstream (single target) & upstream (all) supports

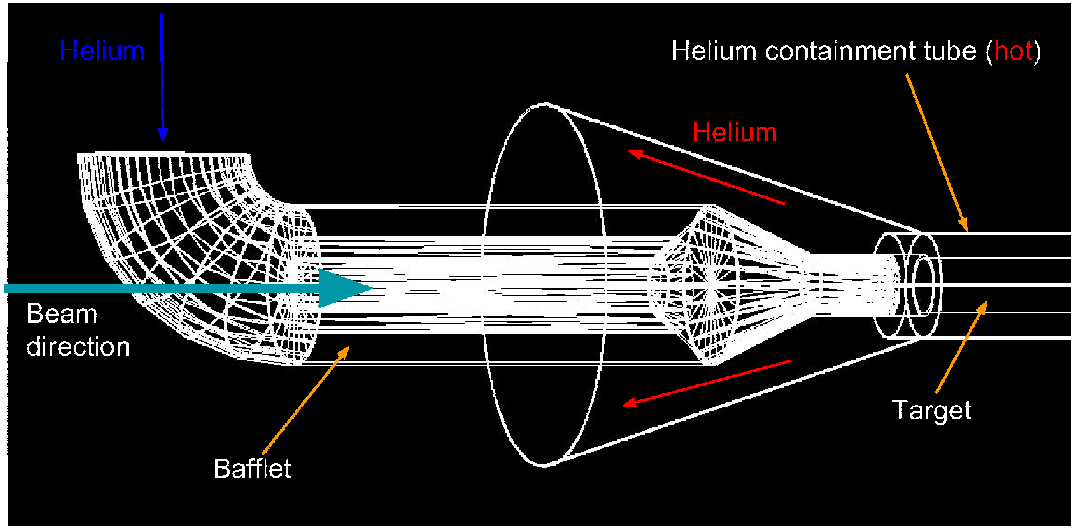

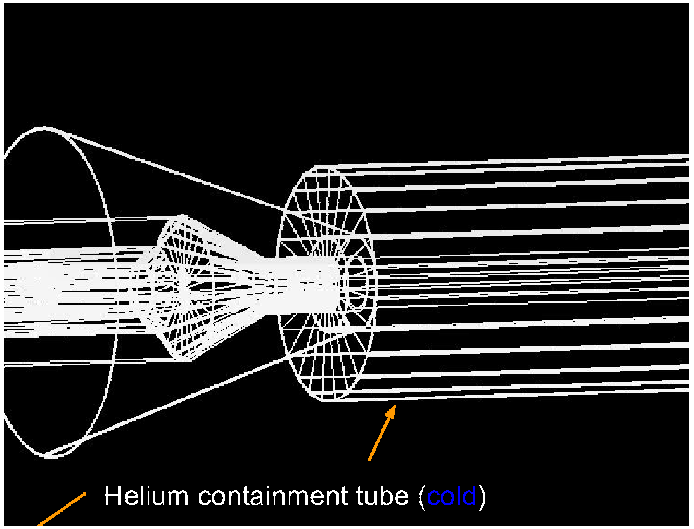

Upstream figure courtesy Rowan Zaki: helium cooling sections.

Downstream support for single target with radial cooling tubes

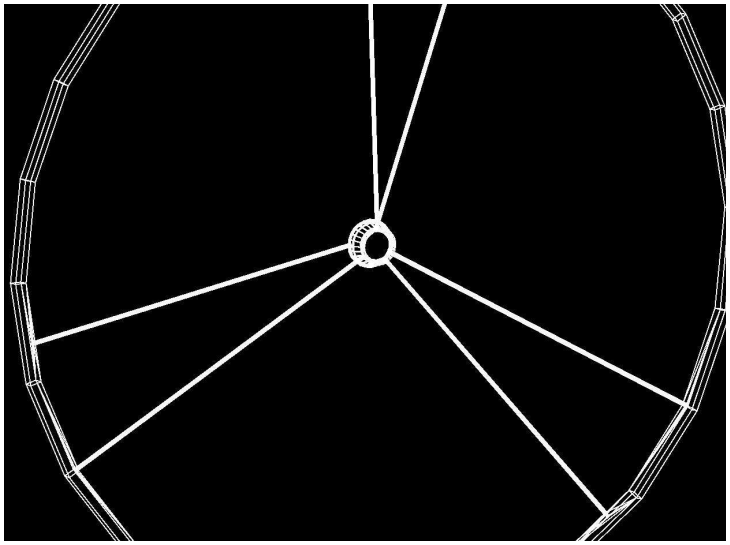

Neutrino running: bkgnd electron neutrino flux

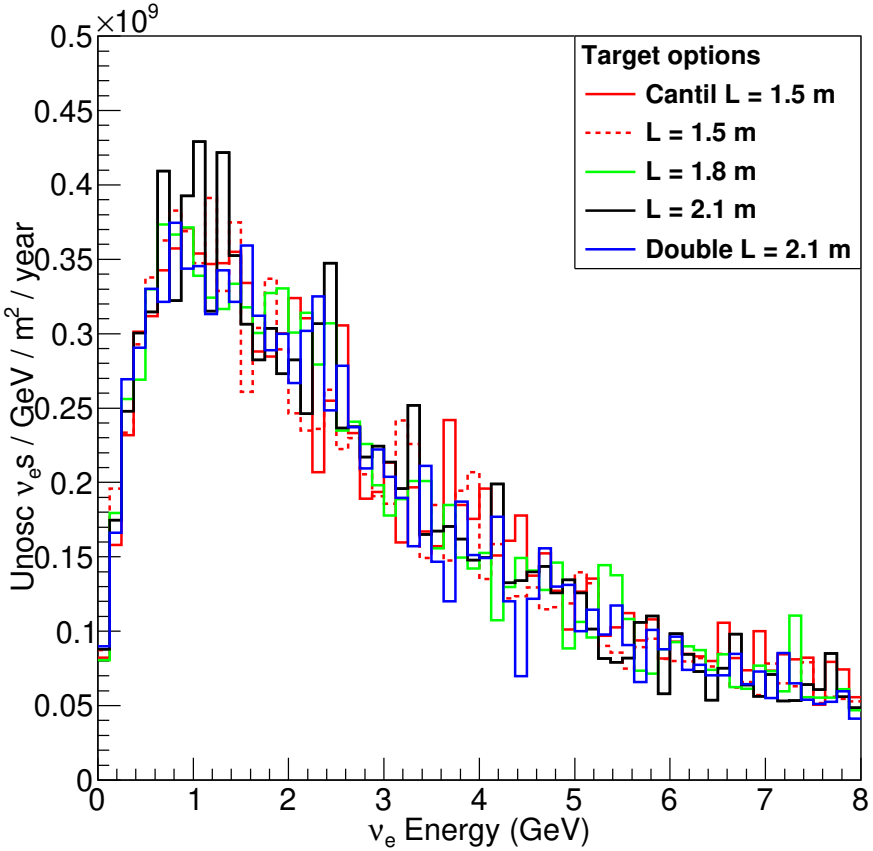

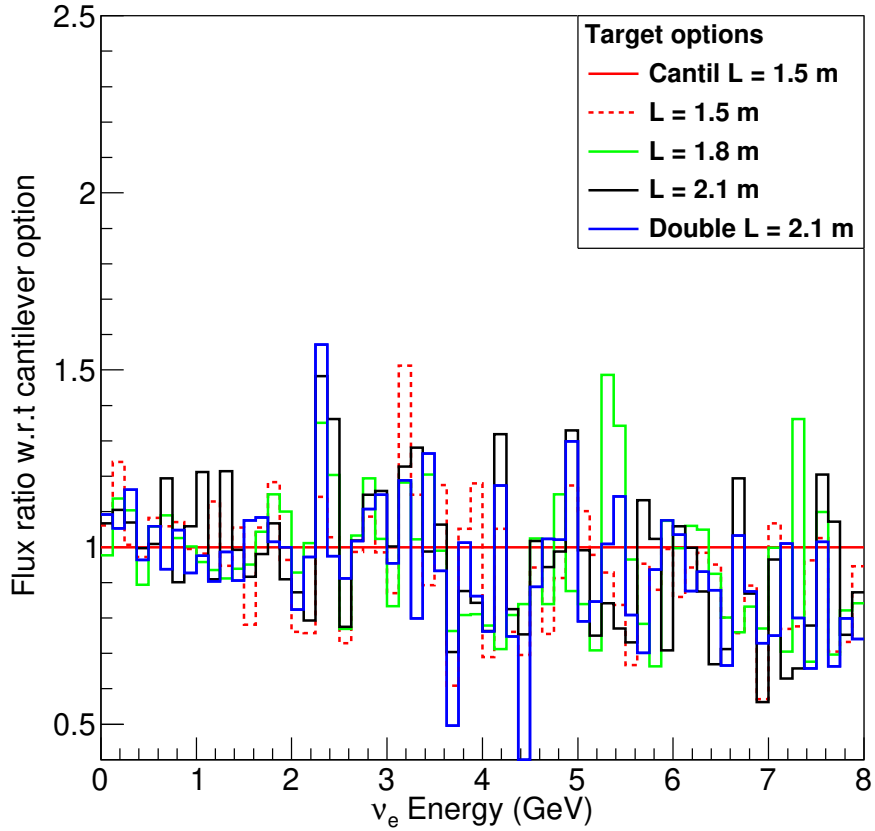

Single upstream cantilever option: Cantil L = 1.5 m

Double target: Double L = 2.1 m

Others: 1 target with downstream support: L = 1.5, 1.8 & 2.1 m

Left: Flux spectrum, Right: Bin-by-bin flux(downstream)/flux(cantilever)

Antineutrino running: bkgnd antielectron neutrino flux

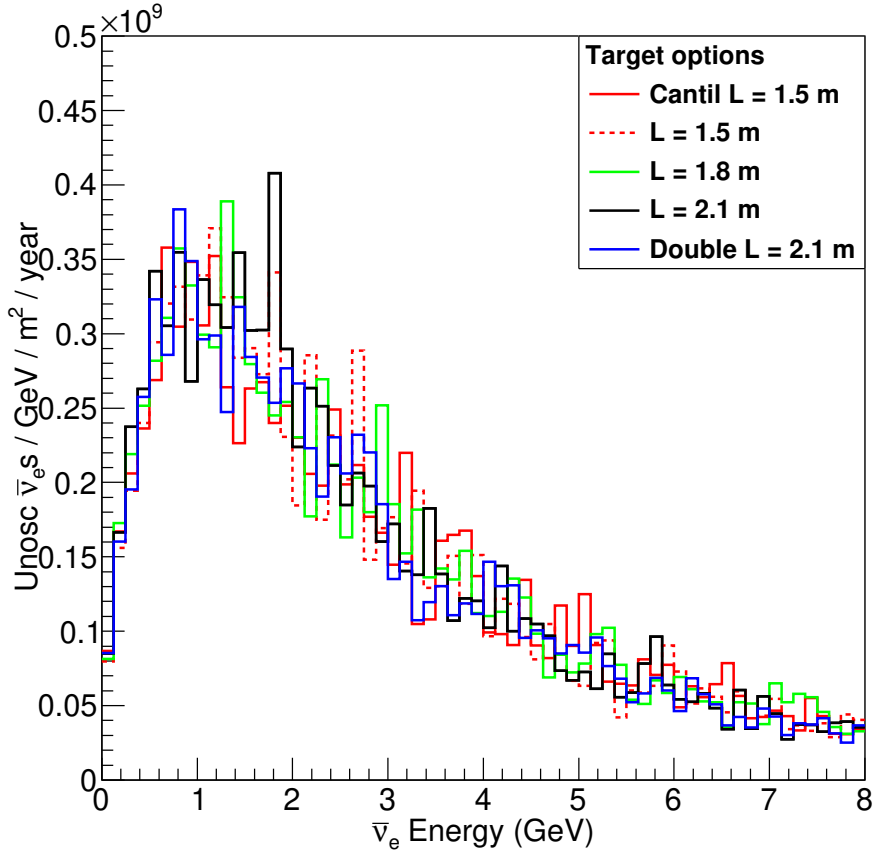

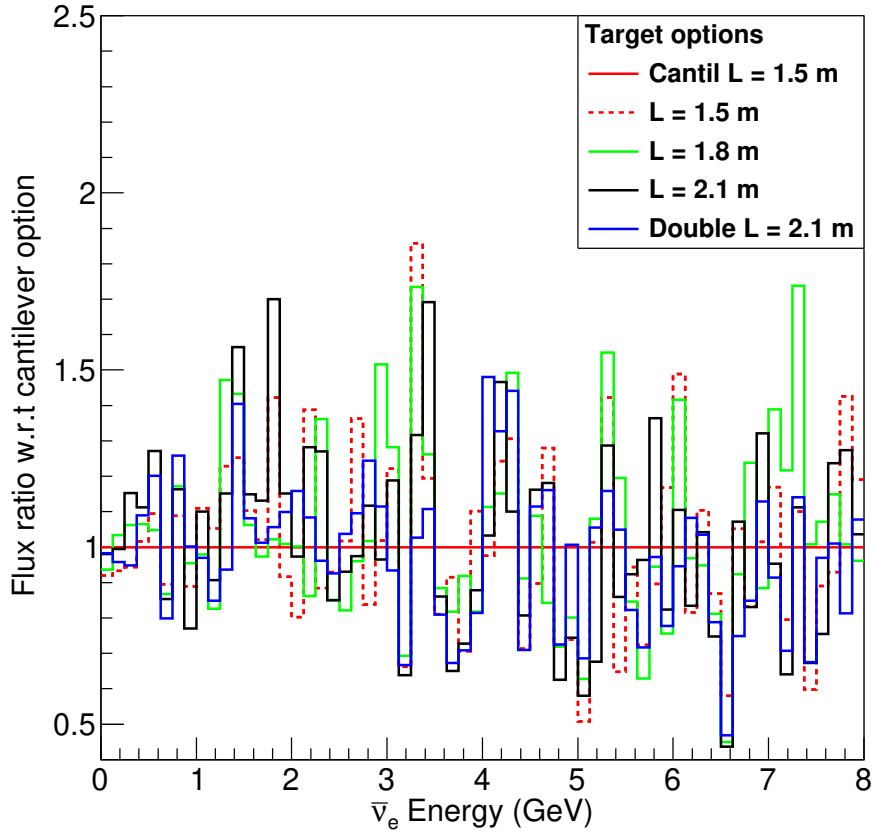

Single upstream cantilever option: Cantil L = 1.5 m

Double target: Double L = 2.1 m

Others: 1 target with downstream support: L = 1.5, 1.8 & 2.1 m

Left: Flux spectrum, Right: Bin-by-bin flux(downstream)/flux(cantilever)

Neutrino running: bkgnd antielectron neutrino flux

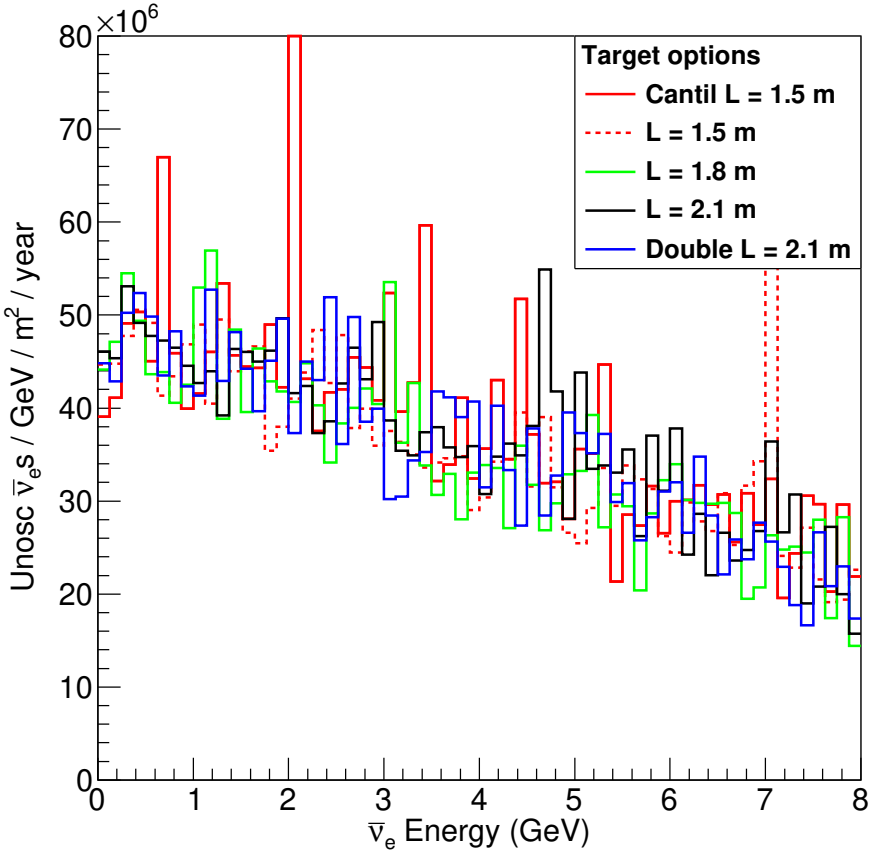

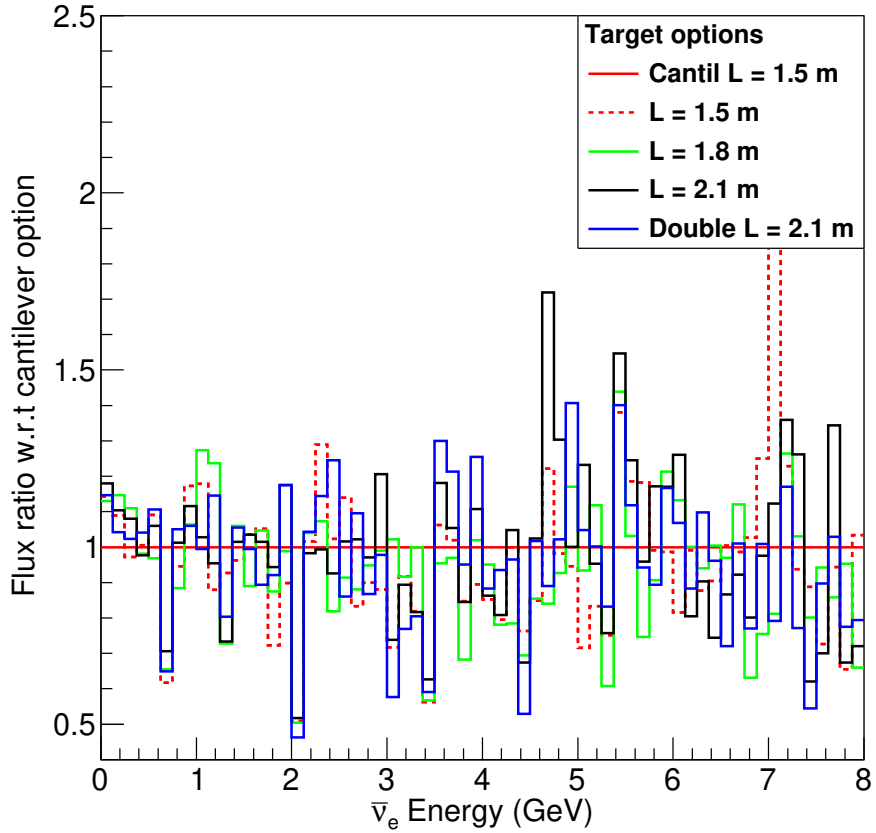

Single upstream cantilever option: Cantil L = 1.5 m

Double target: Double L = 2.1 m

Others: 1 target with downstream support: L = 1.5, 1.8 & 2.1 m

Left: Flux spectrum, Right: Bin-by-bin flux(downstream)/flux(cantilever)

Antineutrino running: bkgnd electron neutrino flux

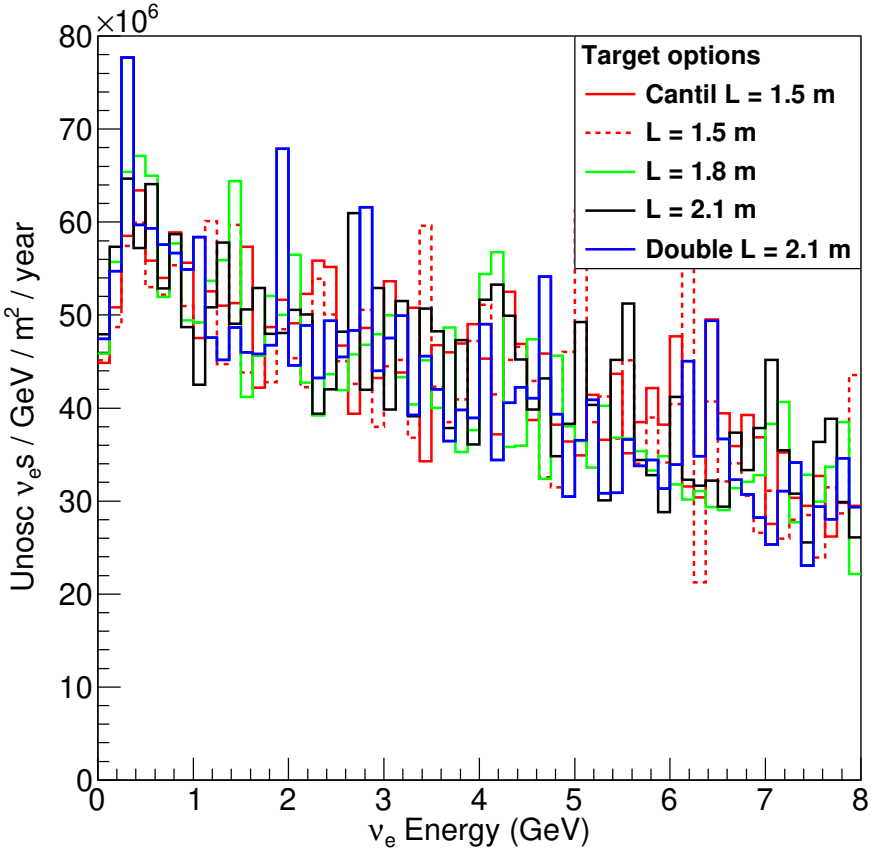

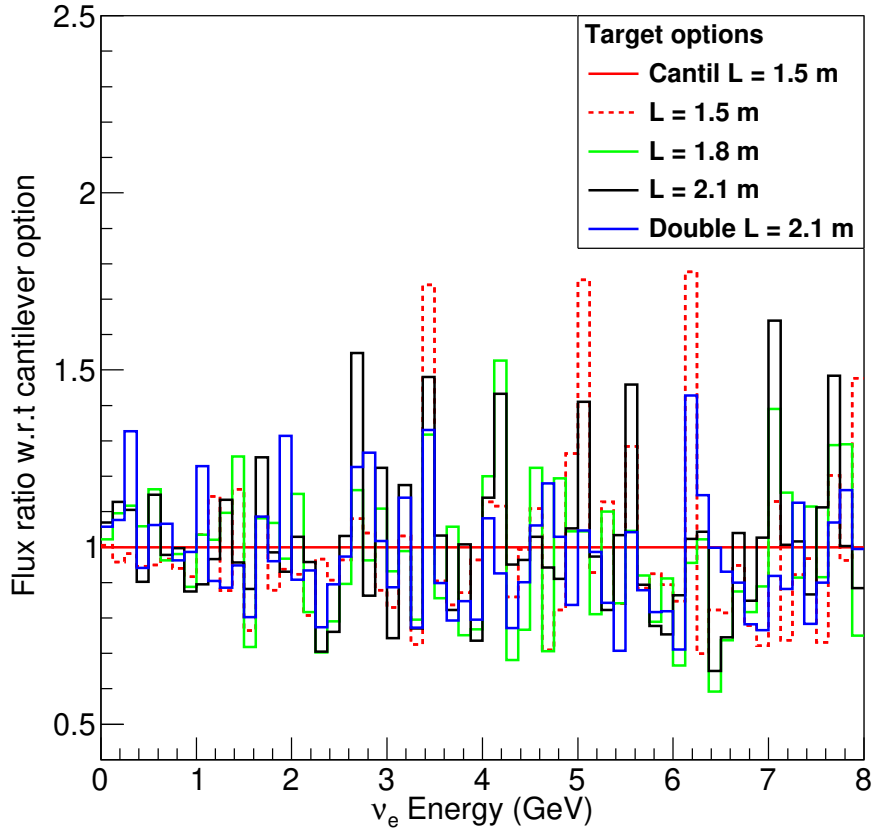

Single upstream cantilever option: Cantil L = 1.5 m

Double target: Double L = 2.1 m

Others: 1 target with downstream support: L = 1.5, 1.8 & 2.1 m

Left: Flux spectrum, Right: Bin-by-bin flux(downstream)/flux(cantilever)

Signal muon integrated flux ratios

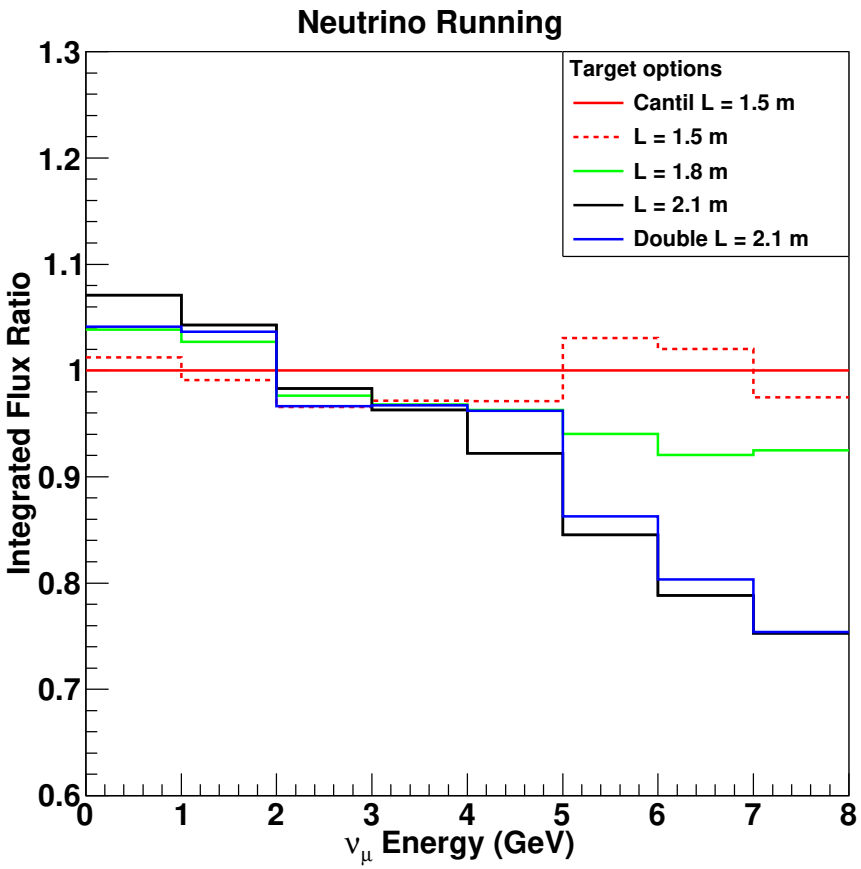

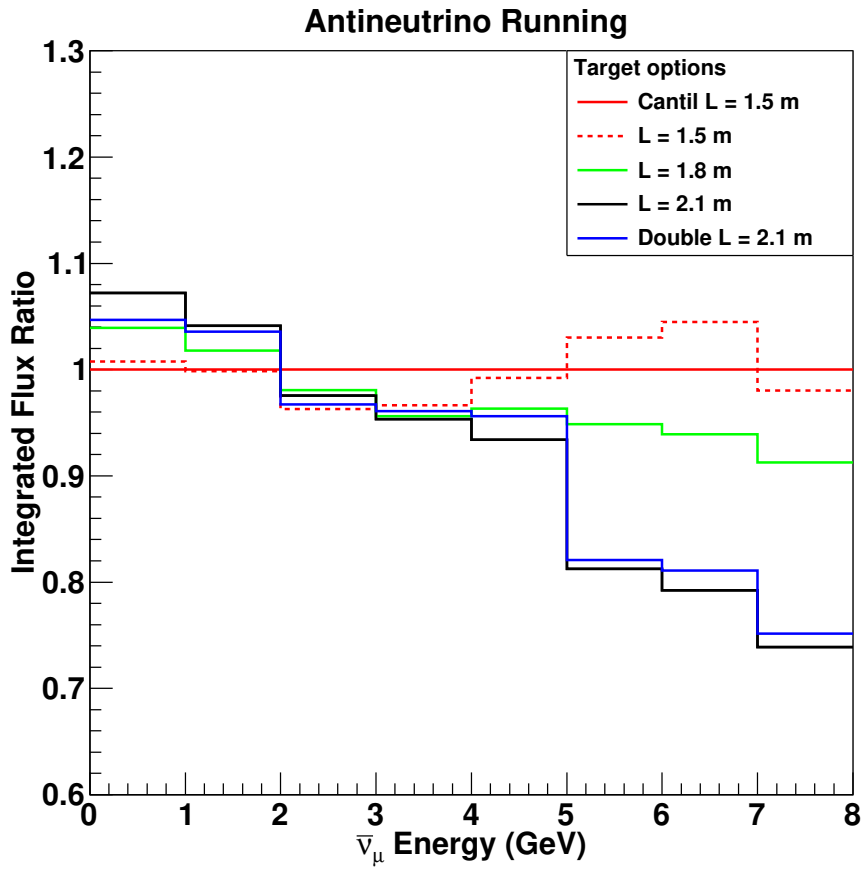

Single upstream cantilever option: Cantil L = 1.5 m

Double target: Double L = 2.1 m

Others: 1 target with downstream support: L = 1.5, 1.8 & 2.1 m

Integrated flux I in ν energy bin $(E_1, E_2) = \Sigma$ flux between E_1 and E_2

Integrated flux ratio $= I(\text{downstream support})/I(\text{cantilever})$

Background antimuon integrated flux ratios

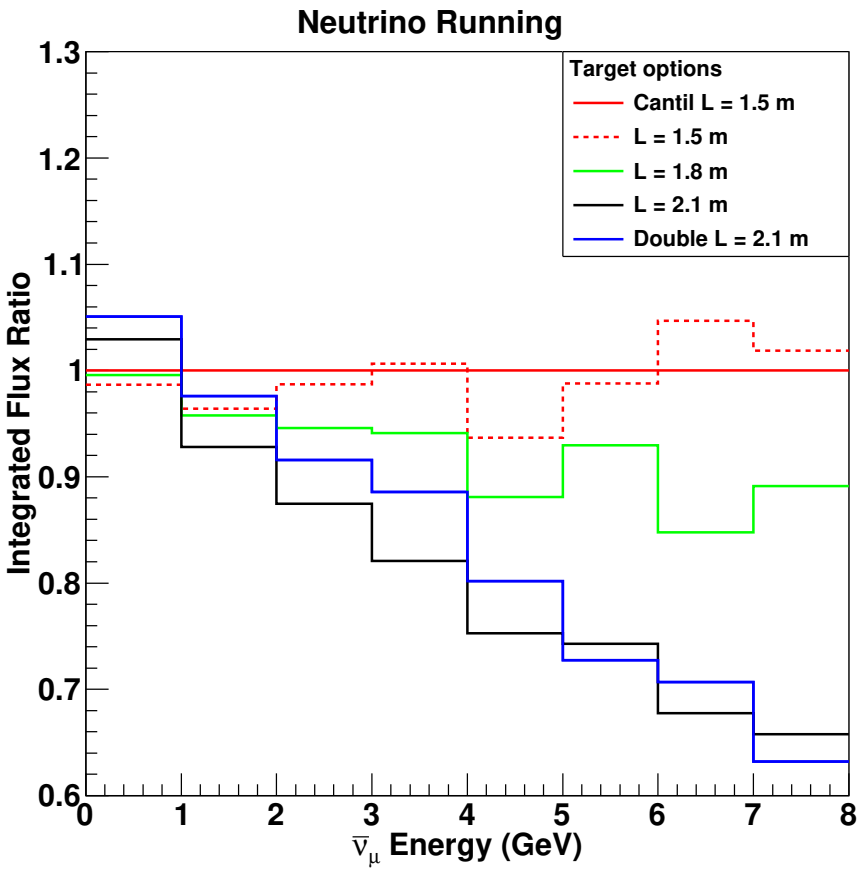

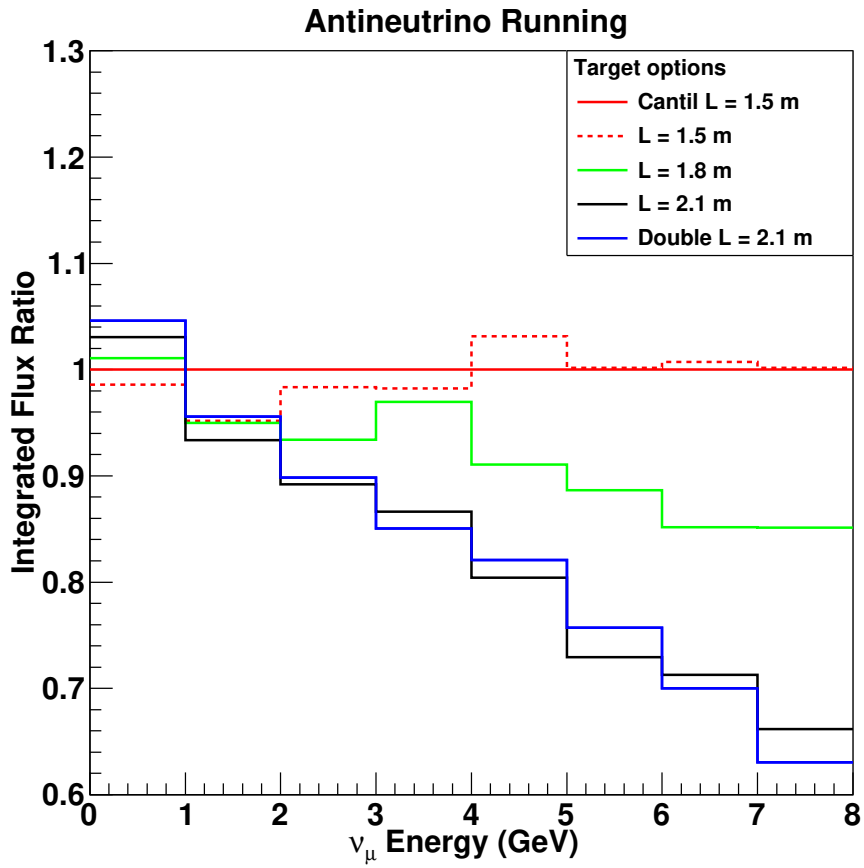

Single upstream cantilever option: Cantil L = 1.5 m

Double target: Double L = 2.1 m

Others: 1 target with downstream support: L = 1.5, 1.8 & 2.1 m

Integrated flux I in ν energy bin $(E_1, E_2) = \Sigma$ flux between E_1 and E_2

Integrated flux ratio $= I(\text{downstream support})/I(\text{cantilever})$

Background electron integrated flux ratios

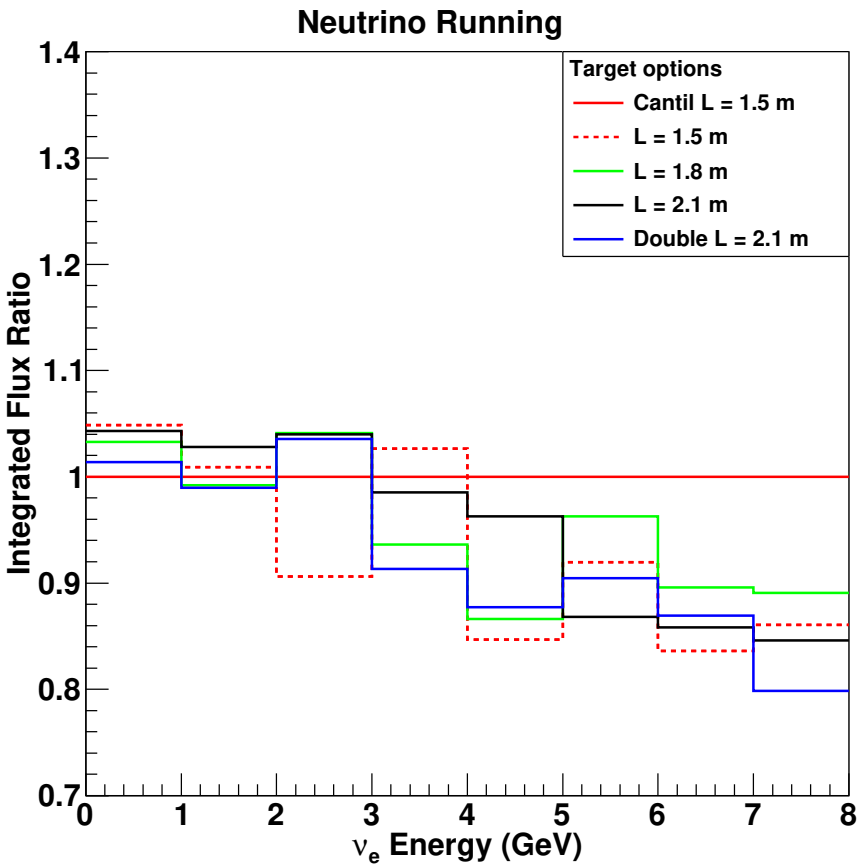

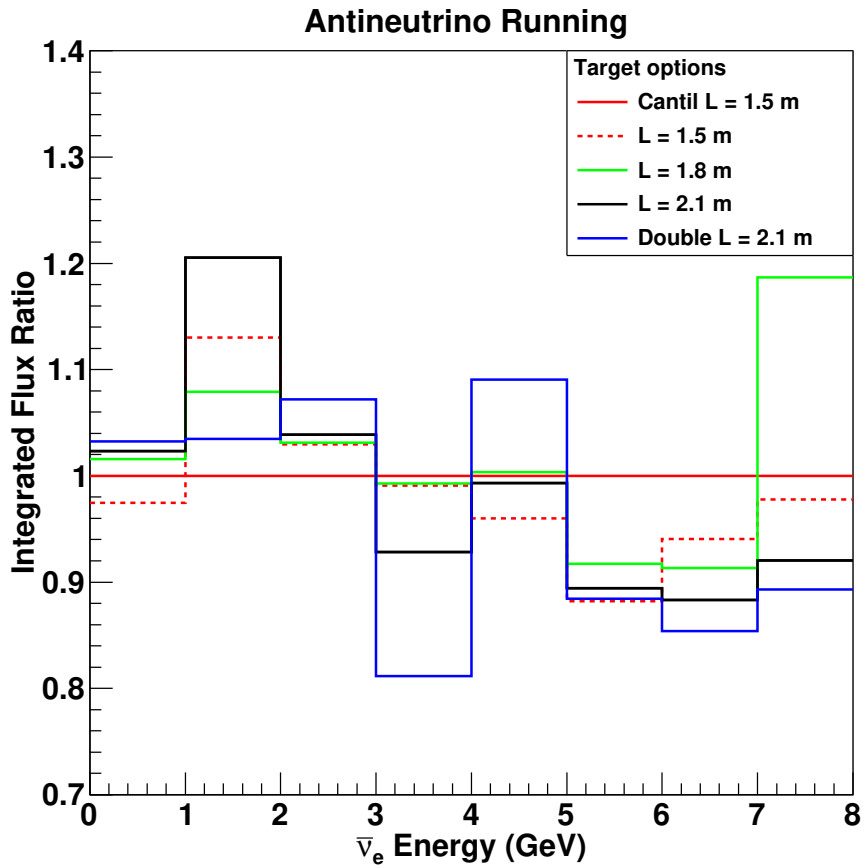

Single upstream cantilever option: Cantil L = 1.5 m

Double target: Double L = 2.1 m

Others: 1 target with downstream support: L = 1.5, 1.8 & 2.1 m

Integrated flux I in ν energy bin $(E_1, E_2) = \Sigma$ flux between E_1 and E_2

Integrated flux ratio $= I(\text{downstream support})/I(\text{cantilever})$

Background antielectron integrated flux ratios

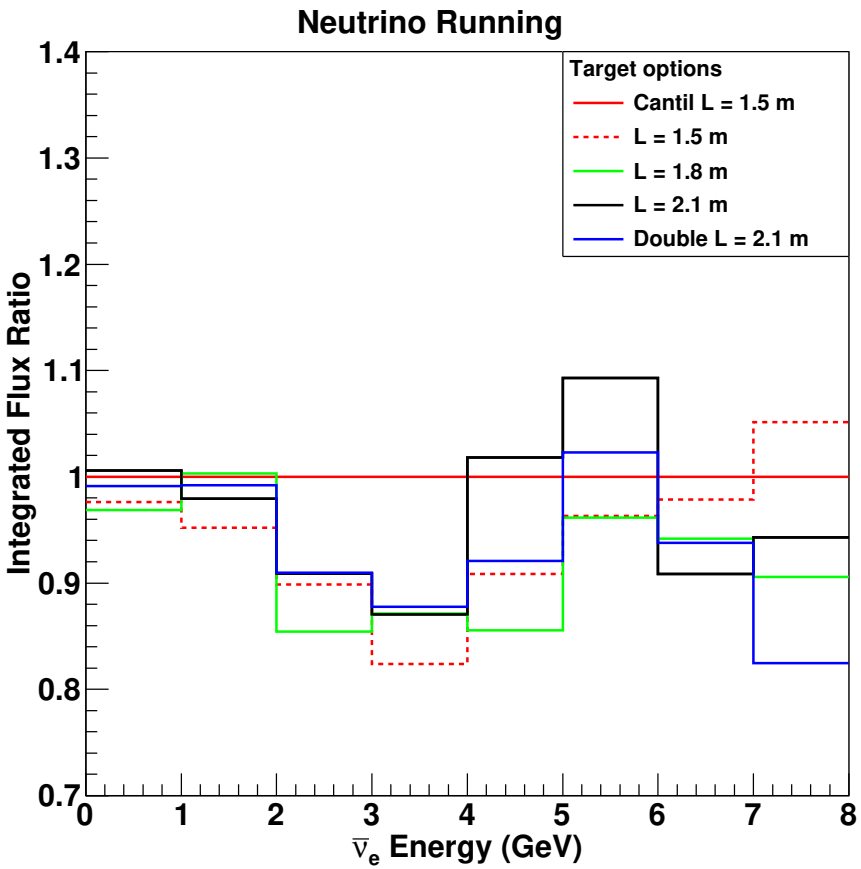

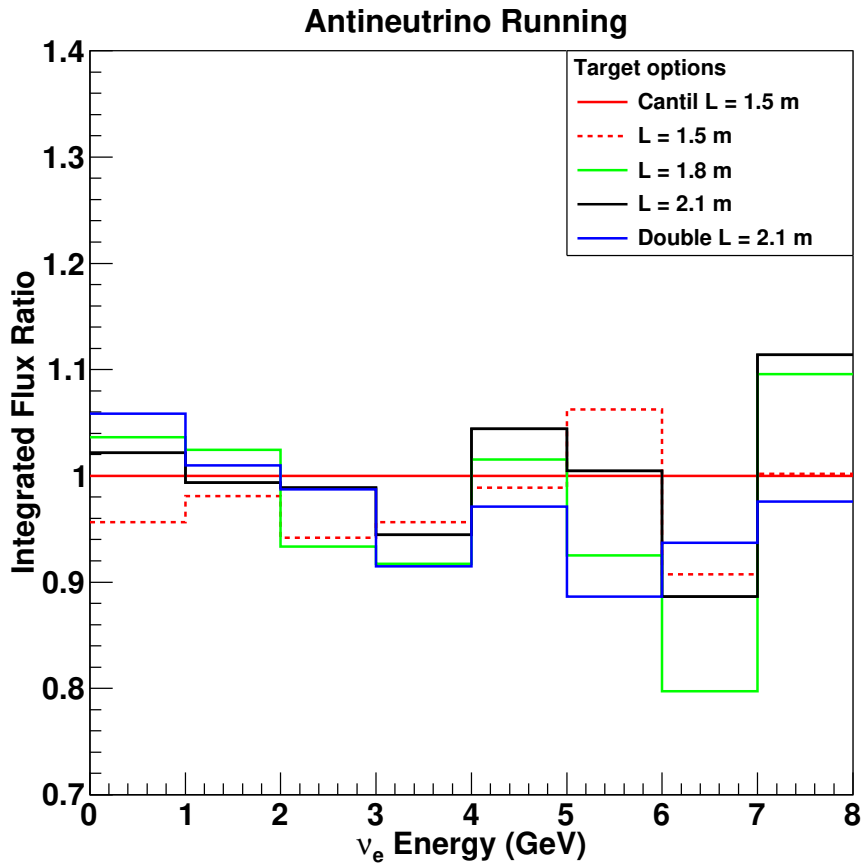

Single upstream cantilever option: Cantil L = 1.5 m

Double target: Double L = 2.1 m

Others: 1 target with downstream support: L = 1.5, 1.8 & 2.1 m

Integrated flux I in ν energy bin $(E_1, E_2) = \Sigma$ flux between E_1 and E_2

Integrated flux ratio $= I(\text{downstream support})/I(\text{cantilever})$