Fermilab SpinQuest/E1039 experiment with Transversely Polarized Target

LANL: **M. Yurov**
E1039 SpinQuest collaboration

52nd Annual Fermilab Users Meeting
06/13/19, Fermilab, Batavia, IL

QUEST for PROTON SPIN ORIGIN

- 1987 EMC polarized DIS measurements:
  contributions of spins of quarks and anti-quarks to the proton spin are small
- broad world-wide program to resolve the
  problem of the nucleon spin composition
- In spite of significant experimental and theoretical advances
  basic problem remains after 30 years of research
- components contributing to proton spin

$$\Delta\Sigma \quad \Delta G \quad L_q \quad L_g$$

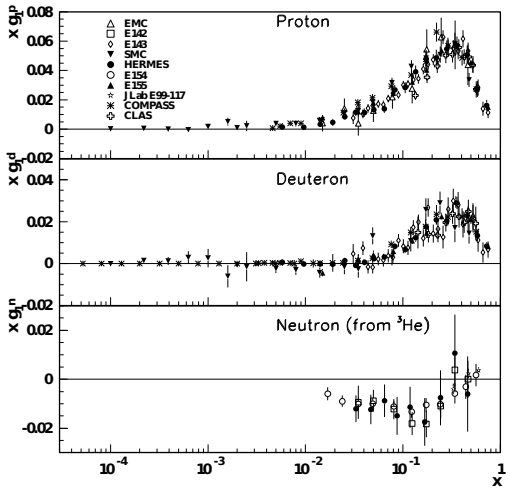

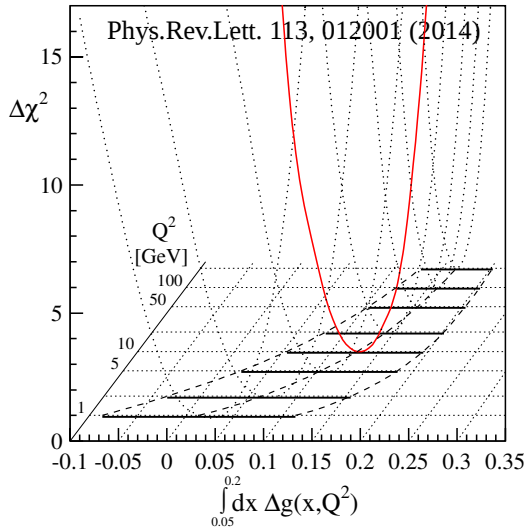

WHY ARE WE DOING E1039?

$$\frac{1}{2} = \frac{1}{2}\Delta\Sigma + L_q + L_{\bar{q}} + \Delta G + L_g$$

- importance of sea quarks
  - account for spin of quarks, anti-quarks and gluons - still missing about half the picture
  - sea quark OAM could be a major part of missing spin
- contribution of OAM of sea quarks remains poorly constrained

Lattice QCD: K.-F. Liu *et al* arXiv:1203.6388

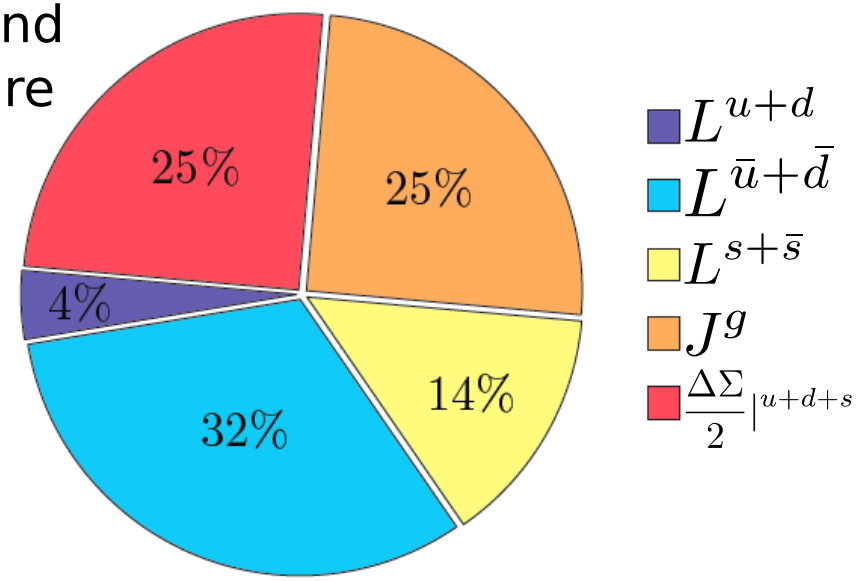

- important to understand theoretically and experimentally
- SpinQuest/E1039 will explore properties of the nucleon's spin composition by investigating correlation of the light antiquarks motion relative to the nucleon spin

HINTS OF NON-ZERO OAM

- sea quarks flavor asymmetry observation

E866/NuSea: enhanced $\bar{d}/\bar{u}$

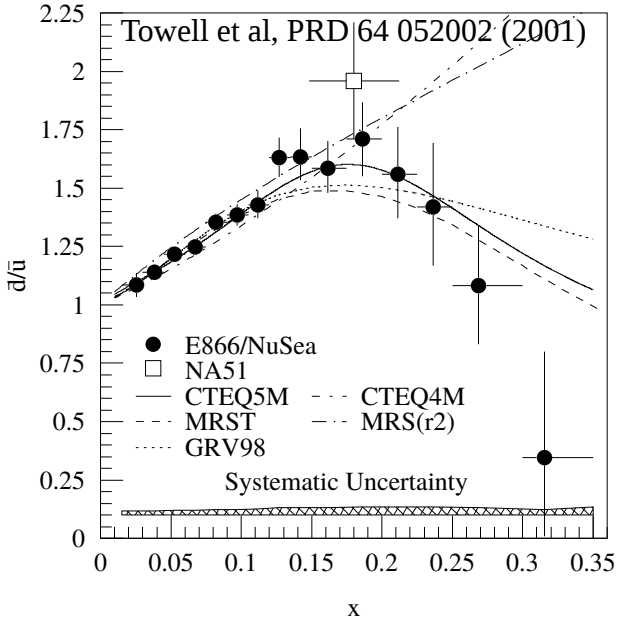

E906/SeaQuest: $\sigma_{pd}/2\sigma_{pp}$

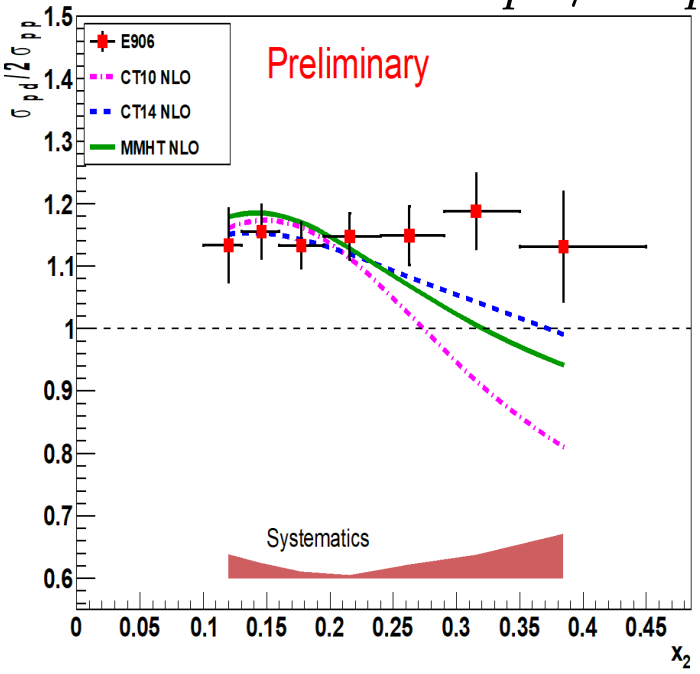

- pion cloud model as possible interpretation

$$|p\rangle \propto |p_0\rangle + |n\pi^+\rangle + |\Delta^{++}\pi^-\rangle + ...$$

  - needs to conserve parity: pions negative parity requires L=1
  - if correct description - $|u\bar{d}\rangle$ possess OAM

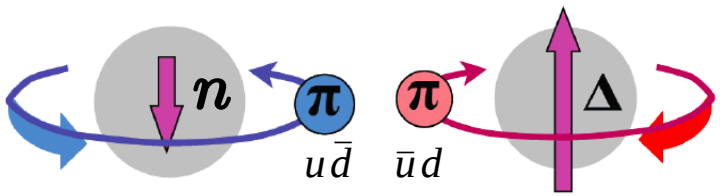

- E866 results might point to sea quarks OAM

SIVERS FUNCTION

- explore correlation of quark motion relative to nucleon spin direction
- eight leading order Transverse Momentum Dependent distribution functions (TMDs)
- **Sivers function** - transverse momentum distribution of unpolarized quarks in a transversely polarized proton

$f_{1T}^{\perp}(x, k_T)$ = 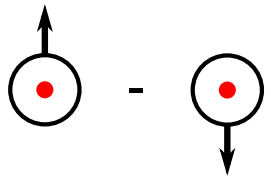 -

- proposed to explain results of experiments such as SSA in $pp^{\uparrow} \to \pi X$ (E704)
  - points to possible intrinsic k_T imbalance; leads to asymmetry
- if sea-quark Sivers asymmetry is non-zero, then sea quarks have non-zero OAM

Phys. Lett. B 264, 462 (1991)

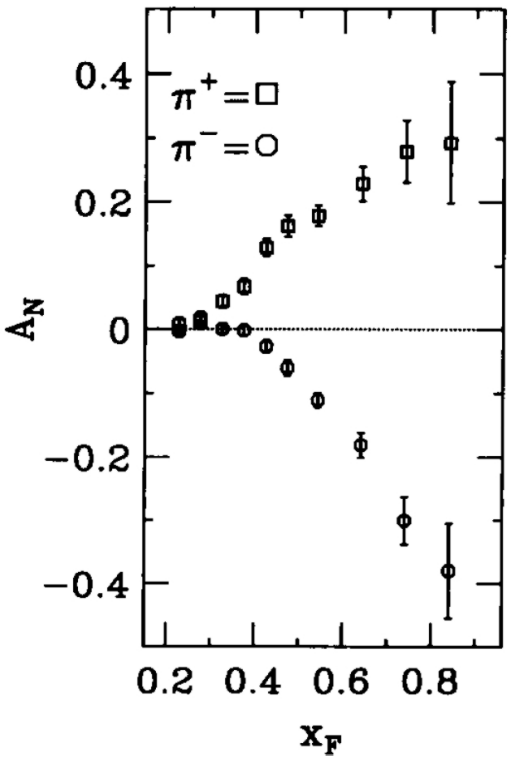

ACCESSING SEA QUARK SIVERS FUNCTION

$$e + p^{\uparrow} \to e' \pi X$$

① Polarized Semi-Inclusive DIS

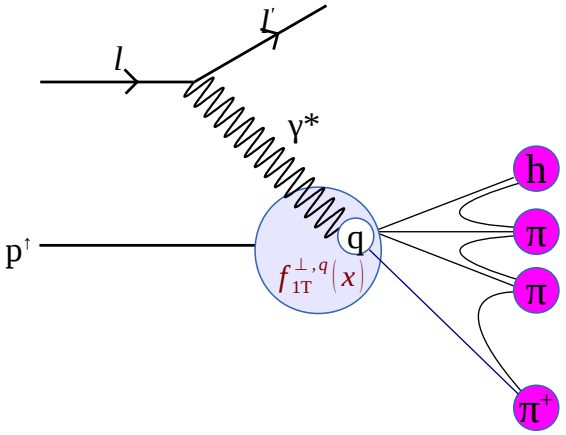

$$A_{UT}^{SIDIS} \propto \frac{\sum_q e_q^2 f_{1T}^{\perp,q}(x) \otimes D_1^q(z)}{\sum_q e_q^2 f_1^q(x) \otimes D_1^q(z)}$$

- L-R asymmetry in hadron production
- quark to hadron fragmentation function
- valence-sea quark: mixed

$$p + p^{\uparrow} \to \mu^+ \mu^- X$$

② Polarized Drell-Yan

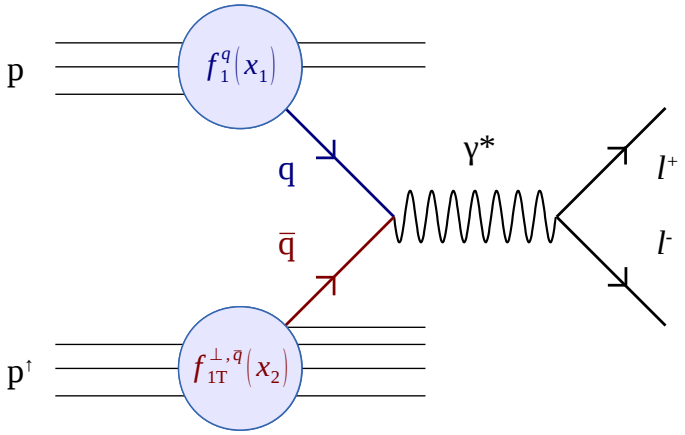

$$A_N^{DY} \propto \frac{\sum_q e_q^2 \left[f_1^q(x_1) \cdot f_{1T}^{\perp,\bar{q}}(x_2) + 1 \leftrightarrow 2 \right]}{\sum_q e_q^2 \left[f_1^q(x_1) \cdot f_1^{\bar{q}}(x_2) + 1 \leftrightarrow 2 \right]}$$

- L-R asymmetry in Drell-Yan production
- no fragmentation function
- valence-sea quark: isolated

ACCESSING SEA QUARK SIVERS FUNCTION

$$e + p^{\uparrow} \rightarrow e' \pi X$$

① Polarized Semi-Inclusive DIS

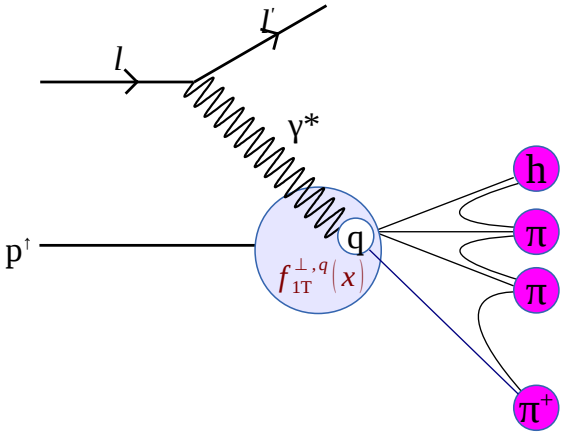

$$A_{UT}^{SIDIS} \propto \frac{\sum_q e_q^2 f_{1T}^{\perp,q}(x) \otimes D_1^q(z)}{\sum_q e_q^2 f_1^q(x) \otimes D_1^q(z)}$$

- L-R asymmetry in hadron production
- quark to hadron fragmentation function
- valence-sea quark: mixed

$$p + p^{\uparrow} \rightarrow \mu^+ \mu^- X$$

② Polarized Drell-Yan

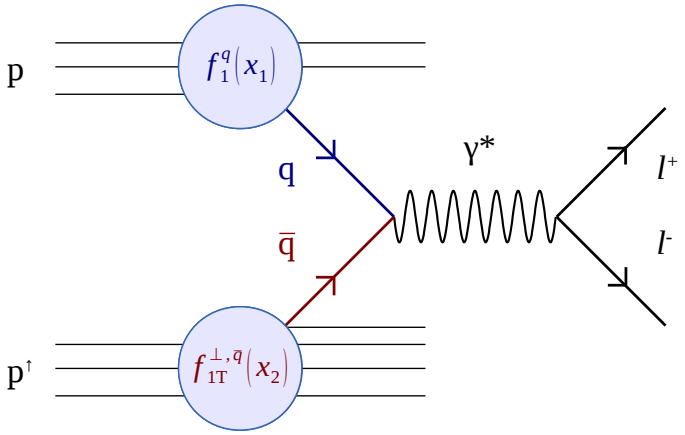

$$A_N^{DY} \propto \frac{\sum_q e_q^2 \left[f_1^q(x_1) \cdot f_{1T}^{\perp,\bar{q}}(x_2) + 1 \leftrightarrow 2 \right]}{\sum_q e_q^2 \left[f_1^q(x_1) \cdot f_1^{\bar{q}}(x_2) + 1 \leftrightarrow 2 \right]}$$

- L-R asymmetry in Drell-Yan production
- no fragmentation function
- valence-sea quark: isolated

E1039 EXPERIMENT

ACCESSING SEA QUARK SIVERS FUNCTION

- has not been tried yet
  - the only high statistics experiment sensitive to sea quarks at large x

quark	SIDIS	Drell-Yan
valence	known	COMPASS
sea	poor sensitivity	**unknown E1039**

- selects sea quark from target
  - $\frac{d^2\sigma}{dx_b dx_t} = \frac{4\pi\alpha^2}{9x_b x_t}\frac{1}{s}\sum_i e_i^2 \times\{q_i(x_b)\bar{q}_i(x_t) + \bar{q}_i(x_b)q_i(x_t)\}$
  - for E1039 kinematic configuration first term dominates
- measure Sivers asymmetry for both
  - $\bar{u}(x), \bar{d}(x)$
  - determine possible flavor asymmetry

$$p + p^{\uparrow} \to \mu^+\mu^- X$$

② Polarized Drell-Yan

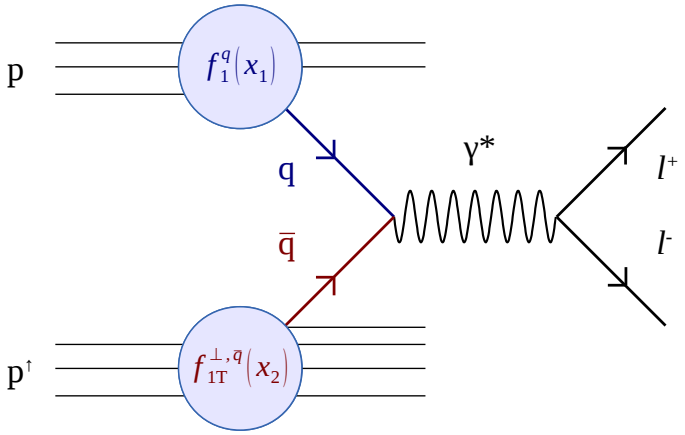

$$A_N^{DY} \propto \frac{\sum_q e_q^2\left[f_1^q(x_1)\cdot f_{1T}^{\perp,\bar{q}}(x_2) + 1 \leftrightarrow 2\right]}{\sum_q e_q^2\left[f_1^q(x_1)\cdot f_1^{\bar{q}}(x_2) + 1 \leftrightarrow 2\right]}$$

- L-R asymmetry in Drell-Yan production
- no fragmentation function
- valence-sea quark: isolated

E1039 EXPERIMENT

FERMILAB E1039 EXPERIMENT

asymmetry estimates (E1039 proposal)

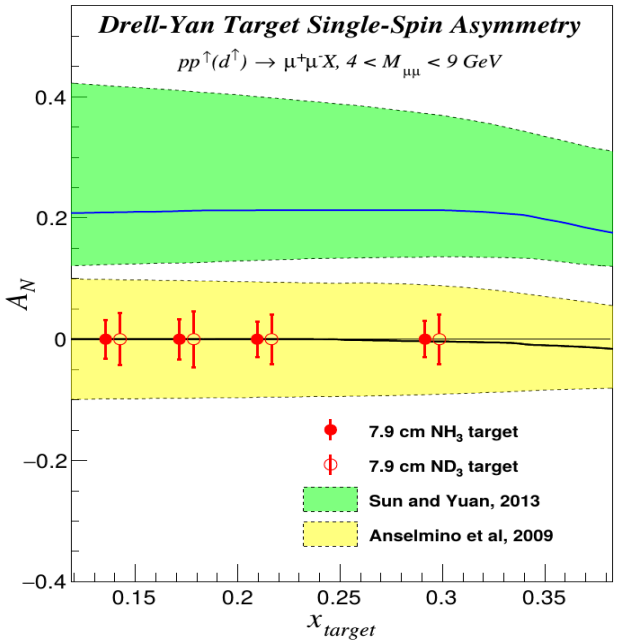

more recent calculations

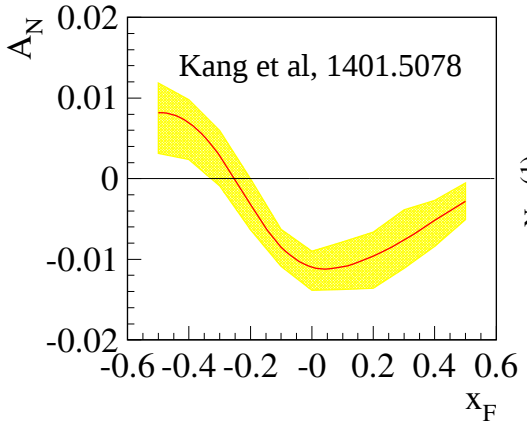

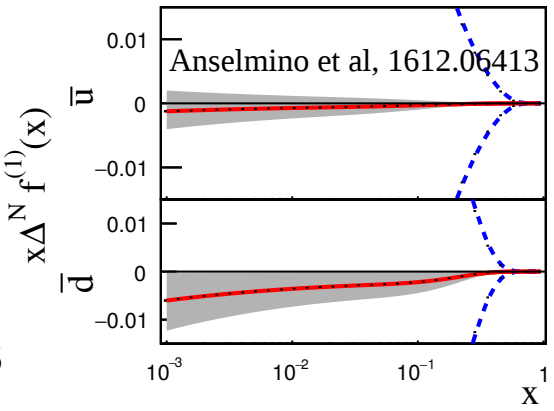

- sign and value of sea quark Sivers asymmetry
- sea quark Sivers flavor dependence
- if non-zero, "smoking gun" evidence for sea quark OAM

statistics estimates and kinematics coverage

Range x_2	Mean x_2	N events p	ΔA % p	N events n	ΔA % n
0.1-0.16	.139	5.0×10^4	3.2	5.8×10^4	5.4
0.16-0.19	0.175	4.5×10^4	3.3	5.2×10^4	5.7
0.19-0.24	0.213	5.7×10^4	2.0	6.6×10^4	5.0
0.24-0.6	0.295	5.5×10^4	3.0	6.4×10^4	5.1

FERMILAB E1039 EXPERIMENT

- FNAL $120GeV$ proton beam
  - $\sqrt{S} = 15.5GeV$
  - 5×10^{12} p/spill; 4.3 s/min
  - 7.7×10^{17} protons on target/year
- SeaQuest E906 spectrometer
  - 4 tracking station, trigger hodoscope
  - focusing & analyzing magnets
  - iron dump
- LANL/UVA polarized target
  - solid NH_3, ND_3
  - 5T field, 1K fridge
  - μ-wave freq. *P* flip

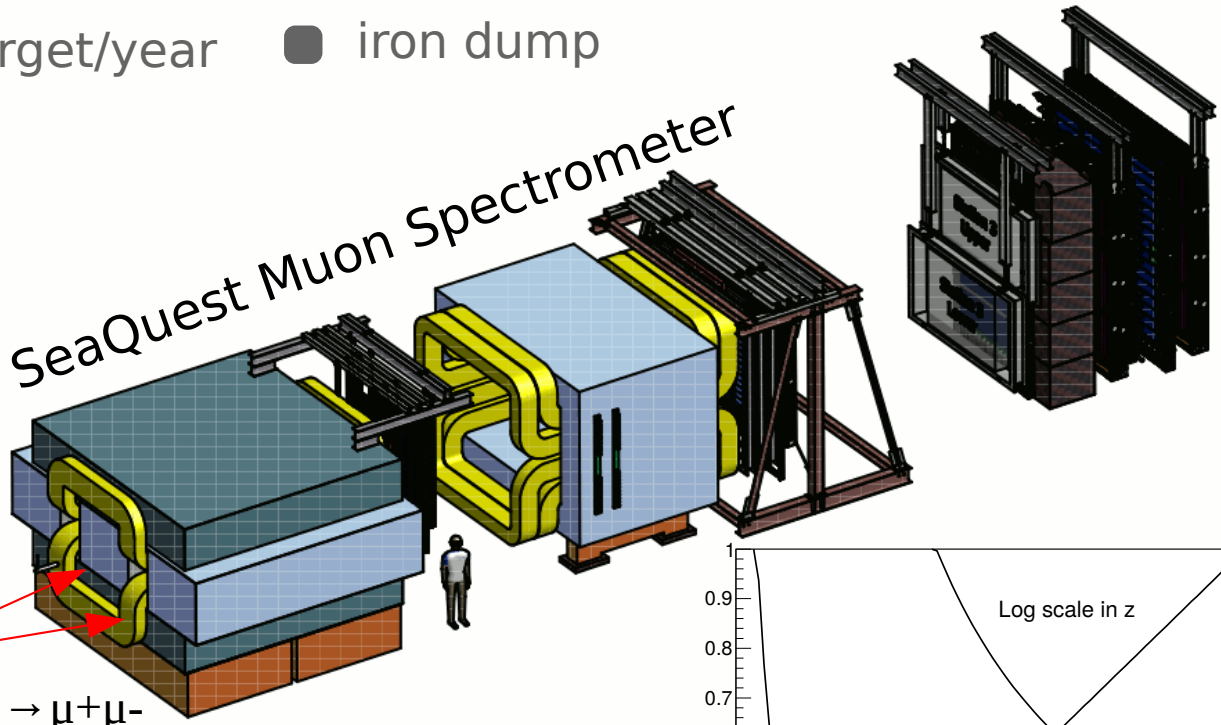

FNAL proton beam
E_{beam} = 120 GeV

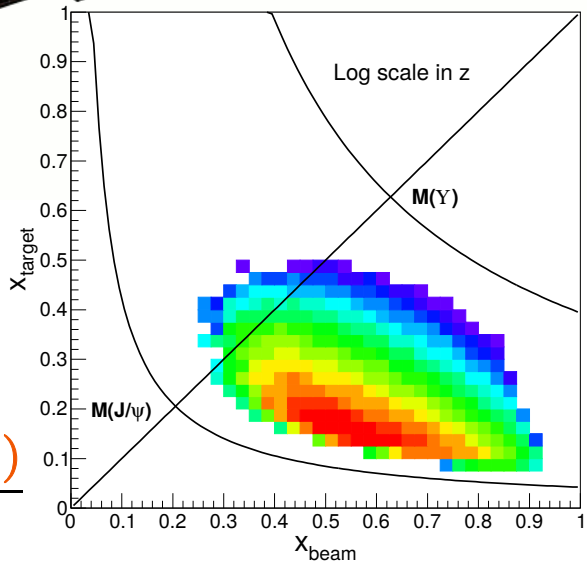

$$A_N(p_{\text{beam}} + p^{\uparrow}_{\text{trg}} \to \text{DY}) \propto \frac{N_L^{DY} - N_R^{DY}}{N_L^{DY} + N_R^{DY}} \propto \frac{f_{1T}^{\perp,\bar{u}}(x_t)}{f_1^{\bar{u}}(x_t)}$$

STATUS and MILESTONES

The experiment is fully funded by DOE,
Stage-2 approval: 05/2018.

STATUS and MILESTONES

- major modifications in experimental hall
  - beamline: new collimator
  - new radiation shielding design
  - new cryo platform for polarized target infrastructure
  - polarized target cave: new location 300cm upstream of FMAG

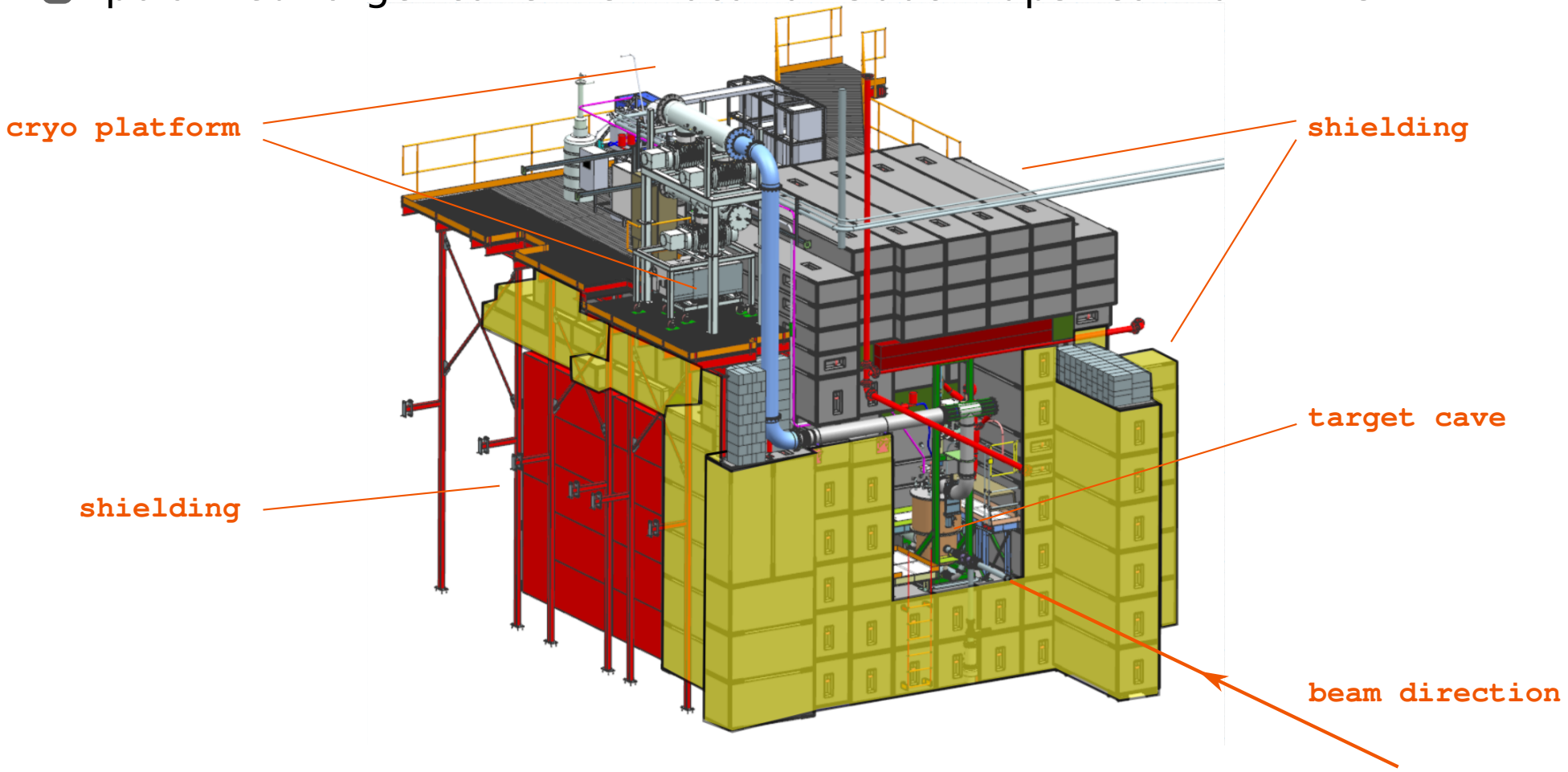

STATUS and MILESTONES

- special thanks to Fermilab support
  - beamline: new collimator
  - new radiation shielding design
  - new cryo platform for polarized target infrastructure
  - polarized target cave: new location 300cm upstream of FMAG

NM3: looking downstream

cryo platform

shielding

collimator

target cave

spectrometer

NM4: looking upstream

STATUS and MILESTONES

- new polarized target construction: LANL and UVA effort
  - rebuild magnet; change field direction
  - modify 1K refrigerator and insert
  - new pump set; high cooling capacity
  - new high power microwave source

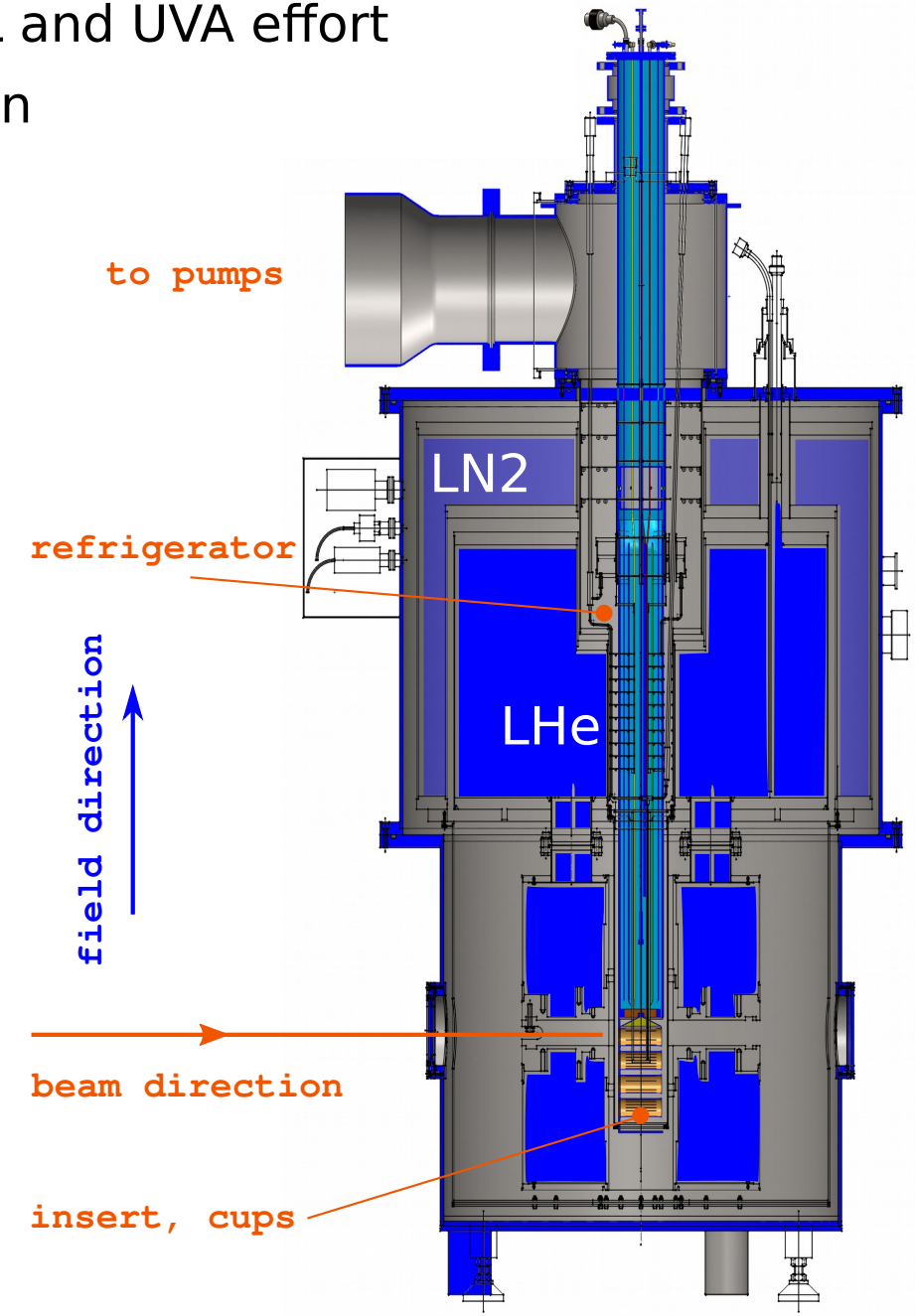

STATUS and MILESTONES

- new polarized target construction: LANL and UVA effort
  - rebuild magnet; change field direction
  - modify 1K refrigerator and insert
  - new pump set; high cooling capacity
  - new high power microwave source
- new NMR system
  - replacing Liverpool Q-meter
  - double wide VME module
  - electronic LCR and phase tune
  - cold NMR

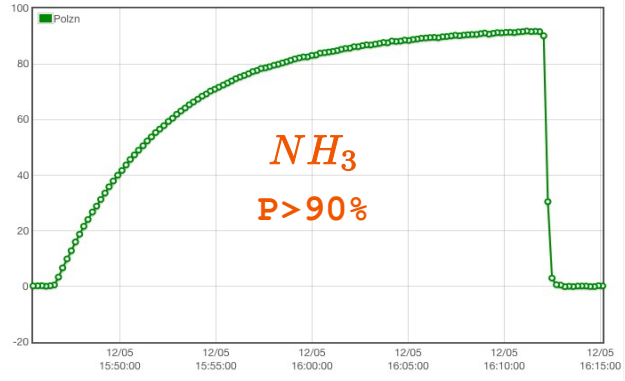

new Q-meter boards

crate controller

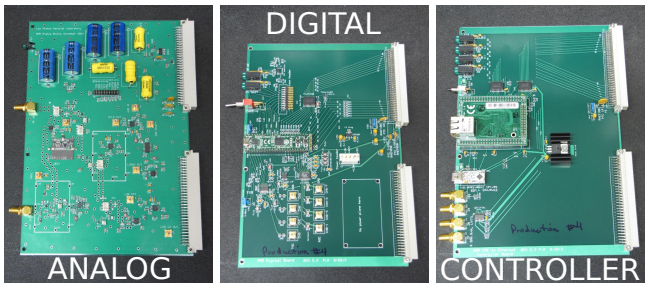

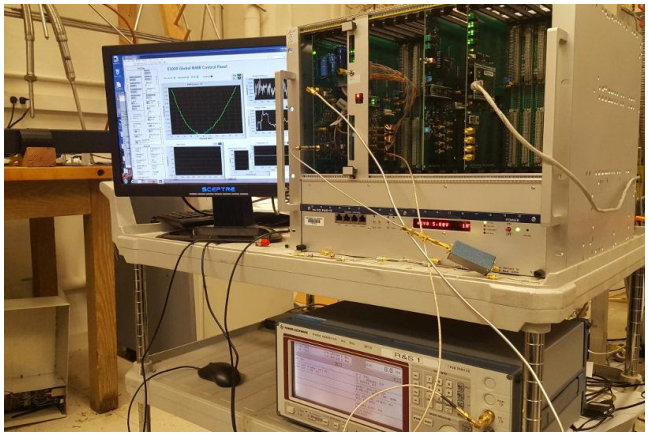

new LANL NMR setup

STATUS and MILESTONES

- new polarized target construction: LANL and UVA effort
  - rebuild magnet; change field direction
  - modify 1K refrigerator and insert
  - new pump set; high cooling capacity
  - new high power microwave source
- new NMR system
  - replacing Liverpool Q-meter
  - double wide VME module
  - electronic LCR and phase tune
  - cold NMR
- He liquefier for liquid helium recirculation
  - constructed by "Quantum technologies"
  - ~200L/day capacity
- inherit spectrometer from SeaQuest E906 experiment
  - dedicated vertex trigger
  - collaboration wide effor to prepare detectors/DAQ for experiment

STATUS and MILESTONES

Current timeline:

May, 2018	E906 decommissioning
Nov, 2018	last UVA target cooldown
June, 2019	target is shipped to FNAL
"Today"	installation is in progress
June/July, 2019	cosmics spectrometer/trigger commissioning
Summer, 2019	target/He liquefier installation
Fall, 2019	beam E1039 commissioning
2019-2021	SpinQuest approved to run 2 years

SpinQuest/E1039 COLLABORATION

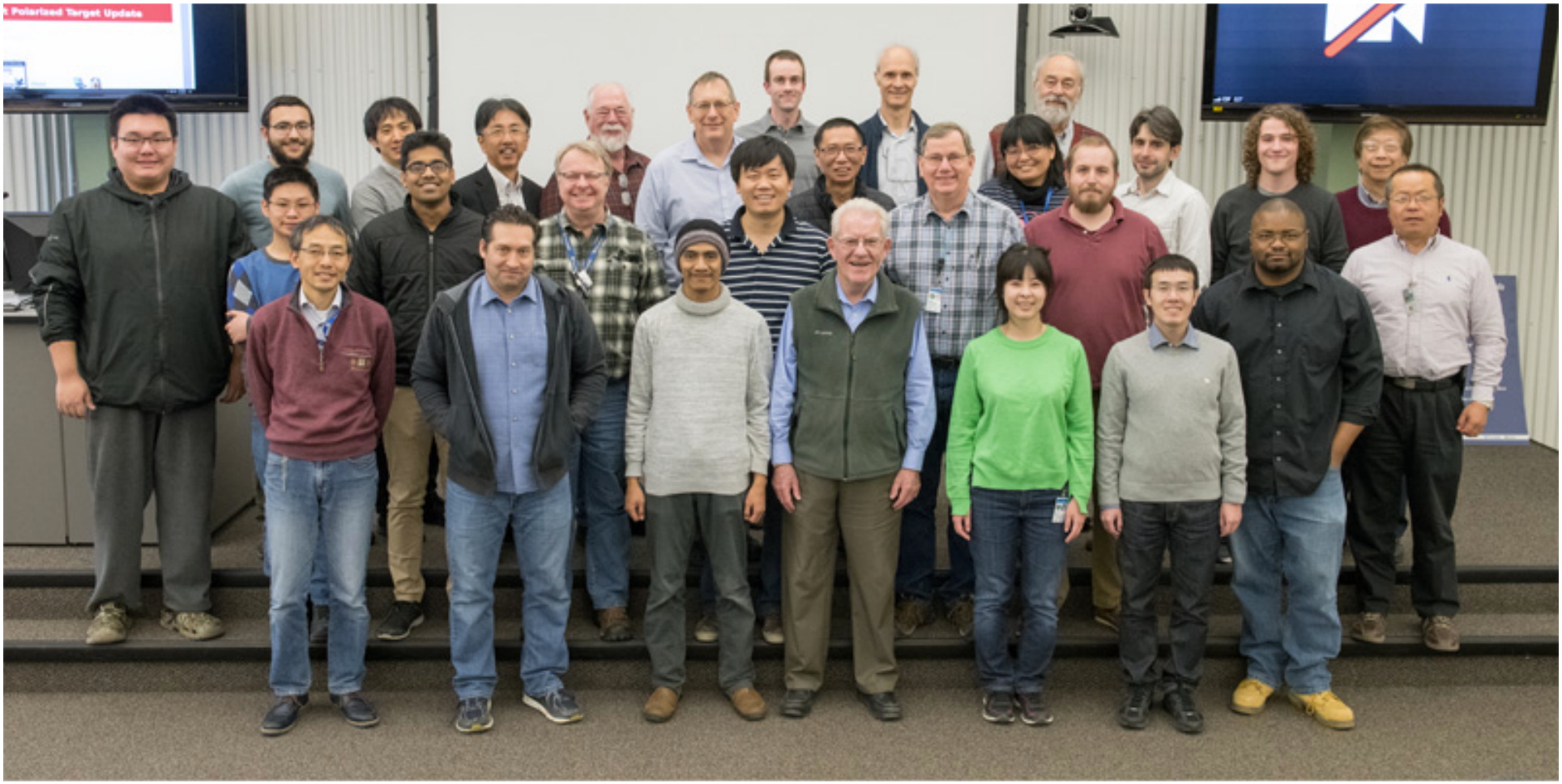

Contact Spokespersons: Kun Liu (liuk@fnal.gov) - LANL
Dustin Keller (dustin@jlab.org) - UVA

Learn more about SpinQuest/E1039:
https://spinquest.fnal.gov/

THANK YOU