Multi-purpose detector (MPD)

Design Status

Alan Bross

LBNC Meeting, Fermilab

June 4th , 2019

Outline

1. Goals for this talk
2. Performance requirements & capabilities
3. Multi-purpose detector (MPD) status
4. *Design decisions and cost drivers.*
5. Conclusions

Goals for this talk

- Provide the review committee with an “existence proof” for a plausible and achievable MPD design that will meet the requirements set in the physics TDR. This need not be an optimized design, but enough to permit sign-off on the physics TDR.
  - What are the detector requirements?
  - What are the MPD’s capabilities w/r to the oscillation analysis?
  - Is the MPD plausible and achievable?
  - Is the detector complexity, size well motivated? What are the cost drivers?
  - What are the technical risks?

Performance requirements for MPD

- Measure particles that leave the LAr ND component and enter the MPD
- Constrain neutrino-nucleus interaction systematic uncertainties
- Precisely measure all-components of the neutrino flux
  - ν_μ, ν_μ-bar, ν_e, ν_e-bar with "*very little*" contamination
- Reconstruct neutrino energy via spectrometry and calorimetry
- Constrain LArTPC detector response and selection efficiency
- Measure energetic neutrons from ν–Ar interactions via time-of-flight with the ECAL

Capabilities that deliver on the requirements

- Provide statistically significant, independent ν event sample on Ar
- High-fidelity particle momentum and charge determination via magnetic curvature.
  - ν_e and ν_μ tagging with very little background contamination
  - ν_e and ν_e-bar tagging (only system that can do this reliably?)
  - Energy scale to 1% (Curvature, Ks, Λs)
  - Provides measurement of the momentum of higher-energy charged particles without requiring containment.
    - Acceptance mimics the FD (i.e. is essentially flat)
- High-resolution imaging of particles emerging from the ν-Ar vertex (including nucleons).
- Separation of tracks and showers for less-ambiguous reconstruction (low-density detector).

Multi-purpose Detector (MPD)

Multi-purpose detector

MPD

- High-Pressure (10ATM) Ar gas TPC (HPgTPC)
  - Copy of ALICE TPC (5m in diameter X 5m long active)
  - 1t fiducial target mass
  - Very low recon E_{thres} for charged tracks (~ 5 MeV)
  - Exquisite PID
  - In ~0.5T field (magnetic spectrometer)
- Surrounded by high-performance ECAL and muon tagger
  - Optimization study not yet started
- Calorimetric analysis (ECAL) for neutrals
- Neutron detection using ECAL
  - With potential to measure E_n via TOF

Event rates in HPgTPC

Event class	Number of events per ton-year
ν_μ CC Total	1.64×10^6
ν_μ NC Total	5.17×10^5
ν_μ CC Coherent	8.35×10^3
ν_μ NC Coherent	4.8×10^3
ν_μ - electron elastic	135
ν_μ CC π^0 inclusive	4.47×10^5
ν_μ NC π^0 inclusive	1.96×10^5
ν_μ Low v (250 MeV)	2.16×10^5
ν_μ Low v (100 MeV)	7.93×10^4
$\bar{\nu}_\mu$ CC Coherent ($\bar{\nu}$ mode)	6.90×10^3
ν_e CC Total	1.89×10^4
ν_e NC Total	5.98×10^3
ν_e CC Coherent	93
ν_e NC Coherent	52

MPD – High-pressure gas TPC

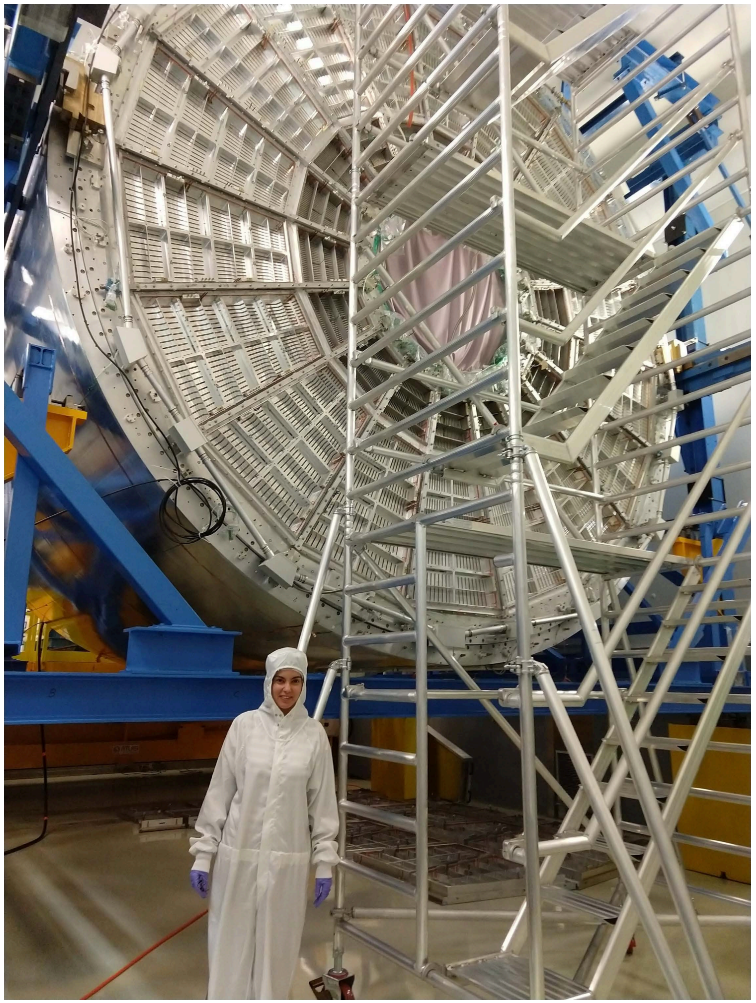

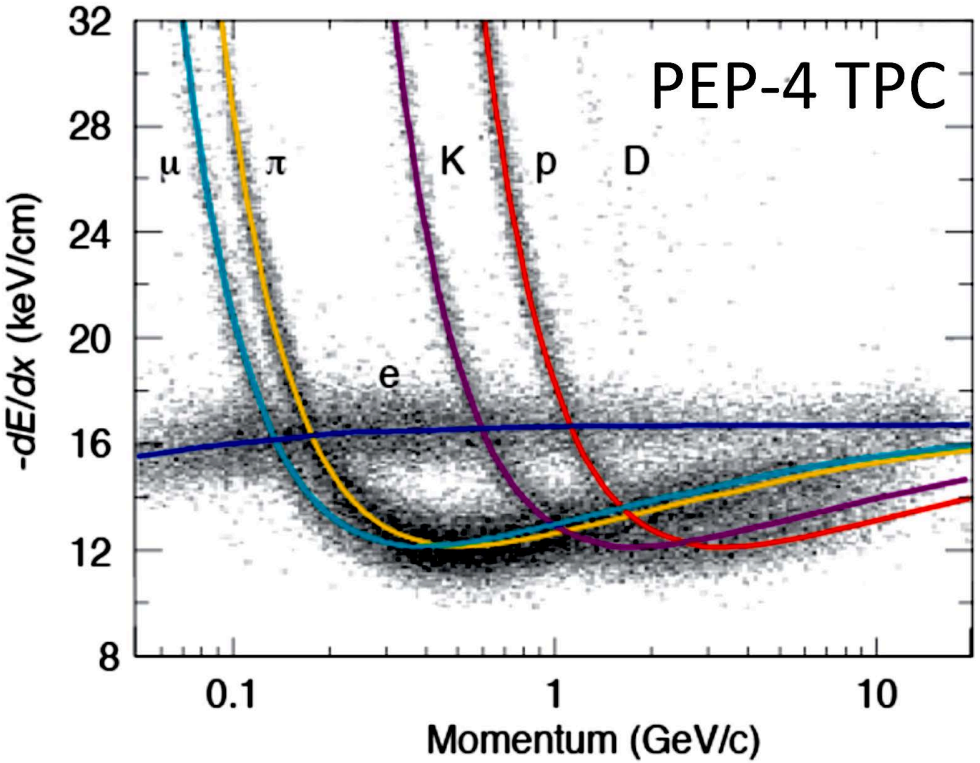

Readout chambers

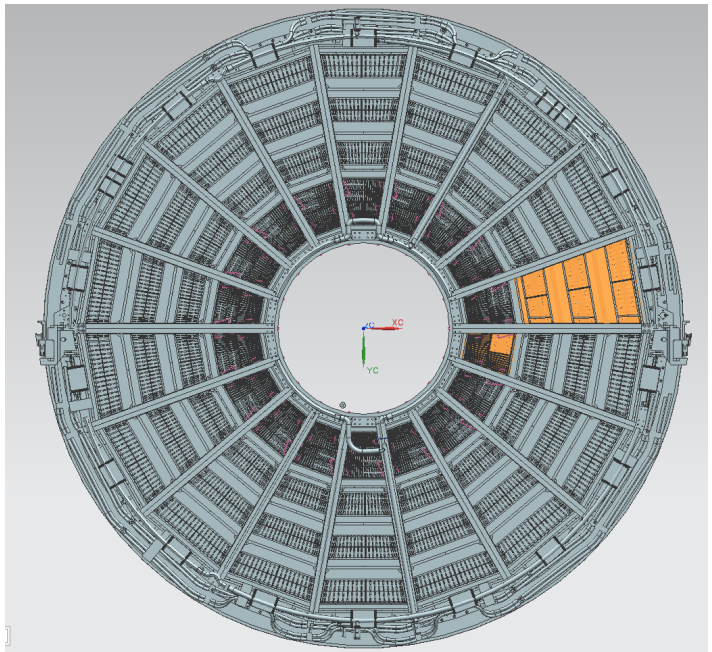

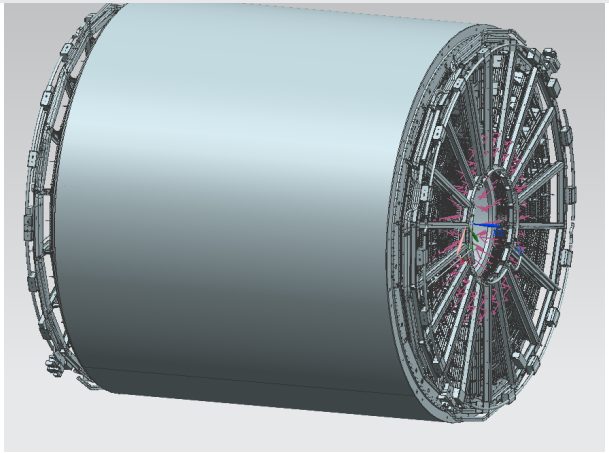

- We are acquiring 36 outer readout chambers and 36 inner readout chambers from ALICE.
- I wanted to show these figures because they represents a full as-built 3D CAD model of the detector. This alone is a significant contribution
- And also note that we will have to build two chambers to fill in the central hole
  - No inner field cage

ALICE chamber acquisition

ECAL *ala CALICE*

- Surrounds HPgTPC to detect photons and neutrons
- Plastic scintillator tiles & strips
- SiPM readout

CALICE AHCAL concept

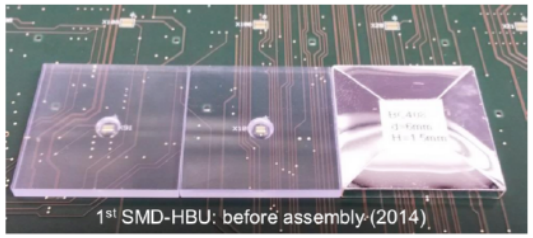

EM shower performance

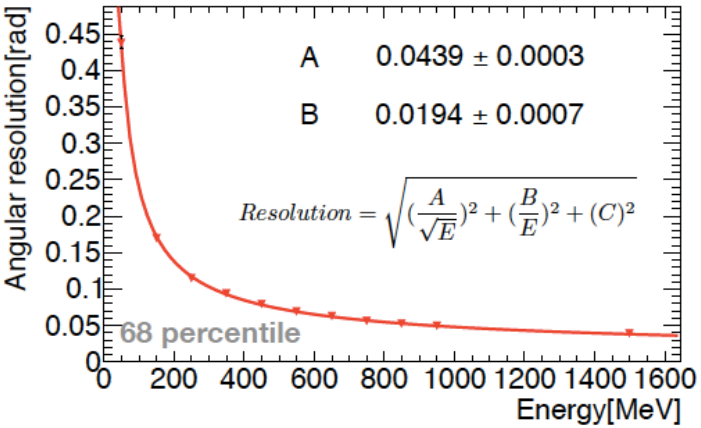

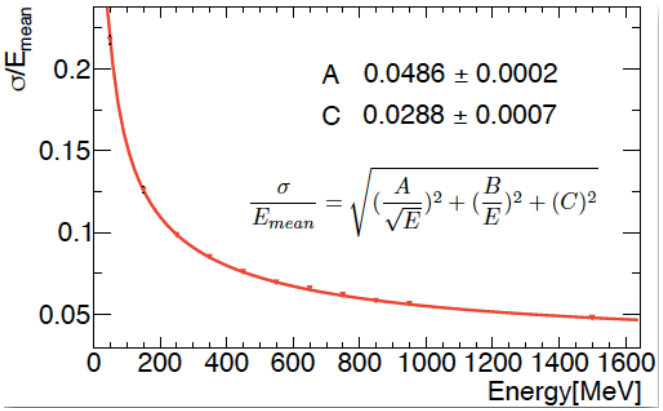

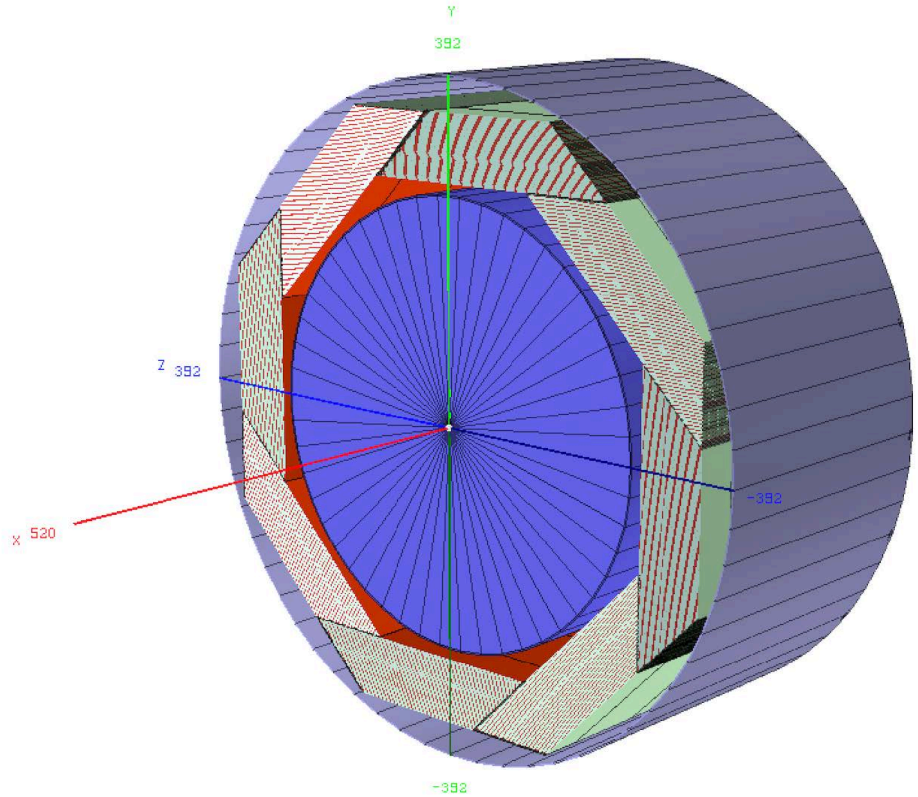

Magnet design: 3-coil Helmhotz with bucking coils

Magnetic model showing coils only.

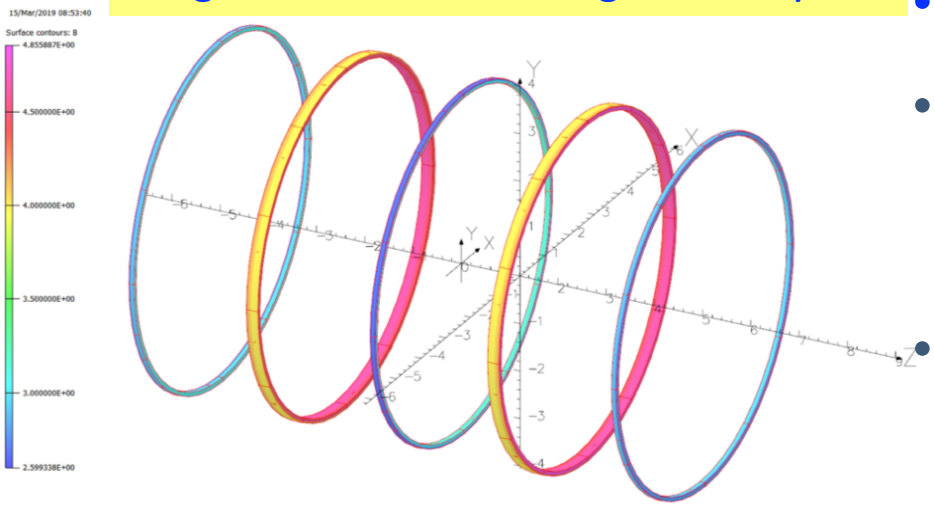

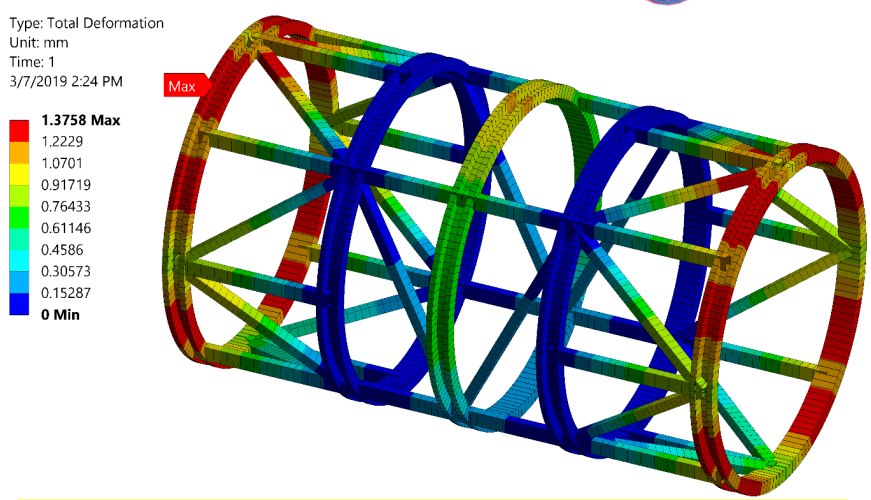

Mechanical support structure analysis

- Central field = 0.5T
- Side coils at 2.5 m, shielding coils placed at 5 m from the magnet center in Z.
- All coils have the same inner radius 3.5 m and outer radius 3.59 m.
- Center and shielding coils are identical.
- Our BARC colleagues have looked at NC design optimization
  - Still very high power– 4MW

MPD: Reconstruction: GArSoft

Implemented

- Event Generation
- Detector Geometry
- Particle Interactions & Energy Deposits
- Drift and Diffusion
- Digitization
- Hit finding and clustering
- Pattern recognition
- Track fitting
- ECAL Digitization
- ECAL Reconstruction
- Ionization-Based Particle ID
  - Initial version exists – needs work

To do (to some degree optimization)

- TPC Field Response and Electronics Response
- Optimize pattern recognition in difficult cases
- Optimize track fit
- Very short tracks in crowded environments will require innovative algorithms
  - Deep learning methods being studied now
- Vertexing
  - Preliminary vertex-finding algorithm written and tested
- ECAL
  - Cluster-Track matching
  - Full energy reconstruction (only visible energy for now)
  - …..

DUNE-Doc 13933

GArSoft Tracking Resolution: muons

Test sample: 1477 ν_μCC events, with neutrino energy = 2 GeV

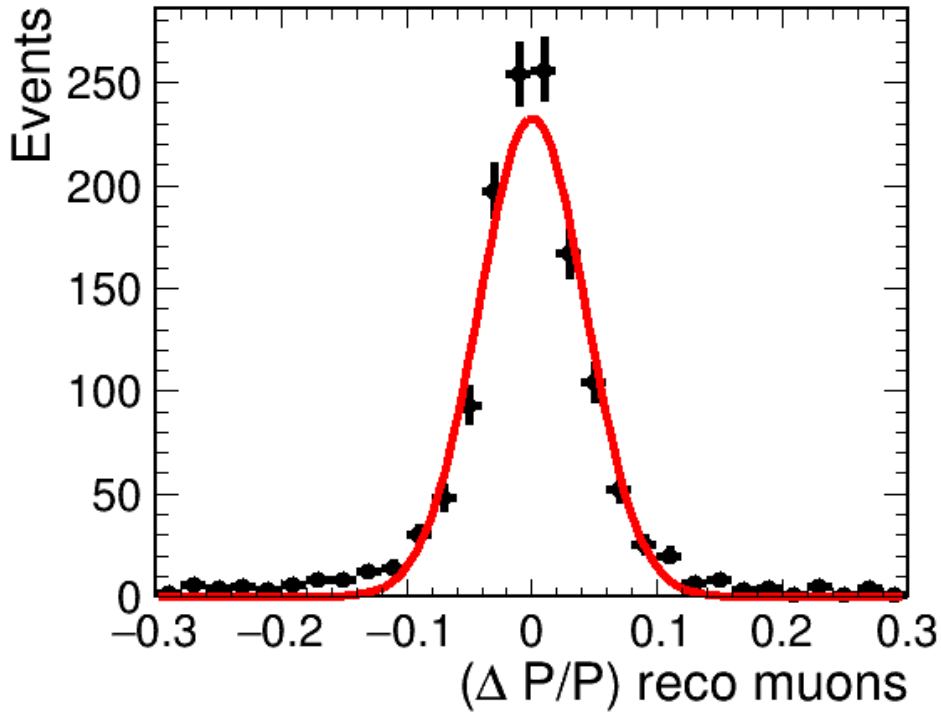

Muon momentum resolution: 4.2% in this sample.

Currently using ALICE point set resolution of 800 μm.

At 10 Atm, we should do much better: 200-300 μm (PEP4)

A Simulated and Reconstructed ν_e Charged Current Event in the HPGTPC

ν_e + Ar → e- + π+ + p + n

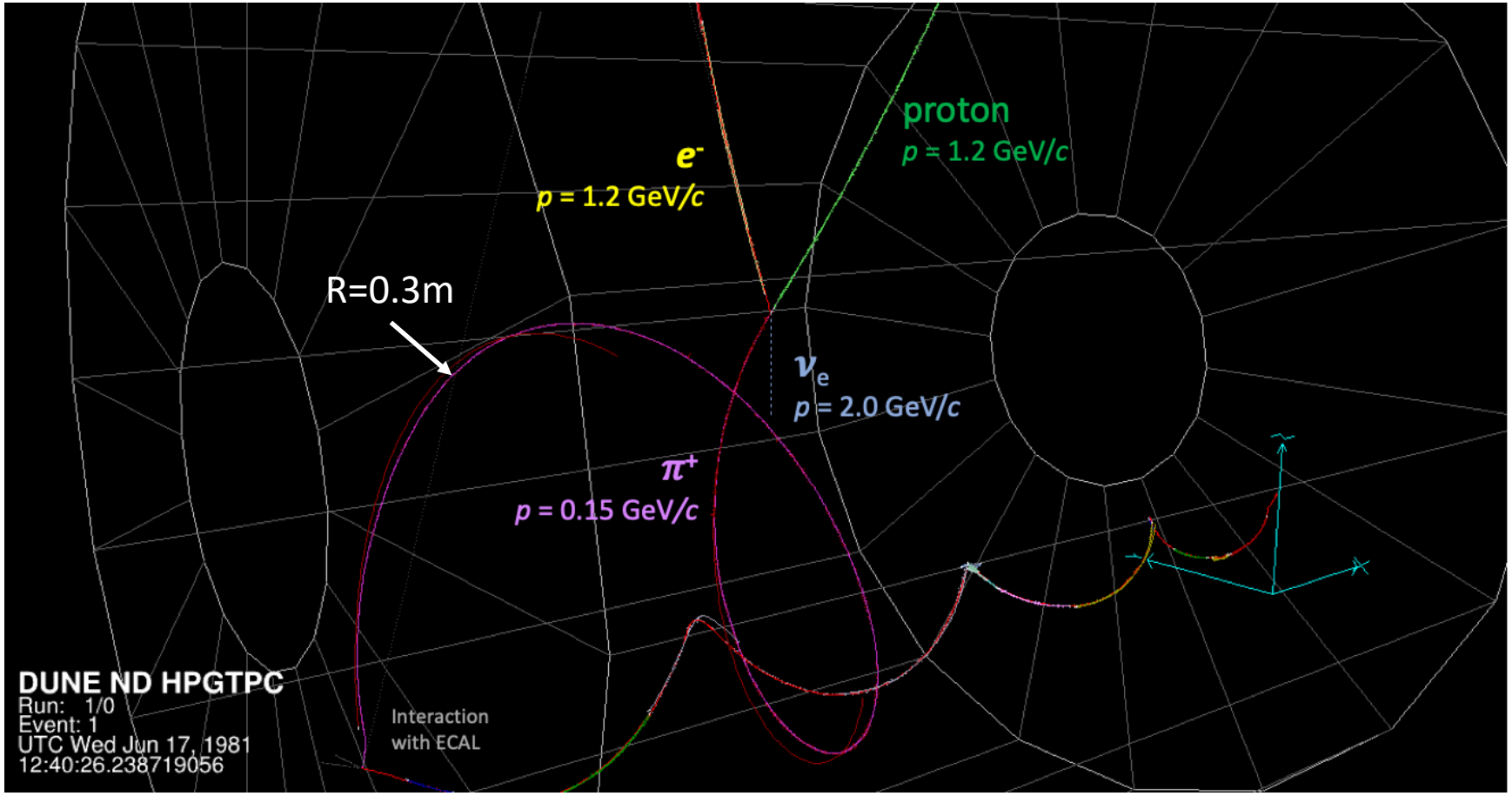

Neutron with p = 0.23 GeV/c at the P.V. not shown

Finding Short Tracks Near the Primary Vertex

- RANSAC line finding + Neural Network for p/π separation and energy estimation

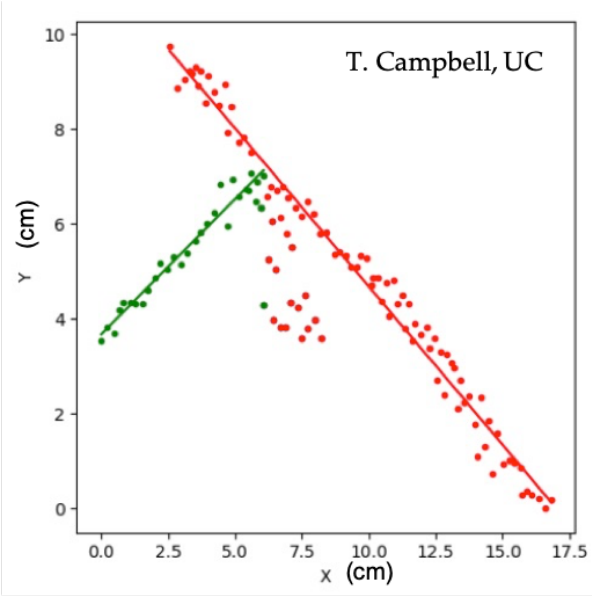

Results

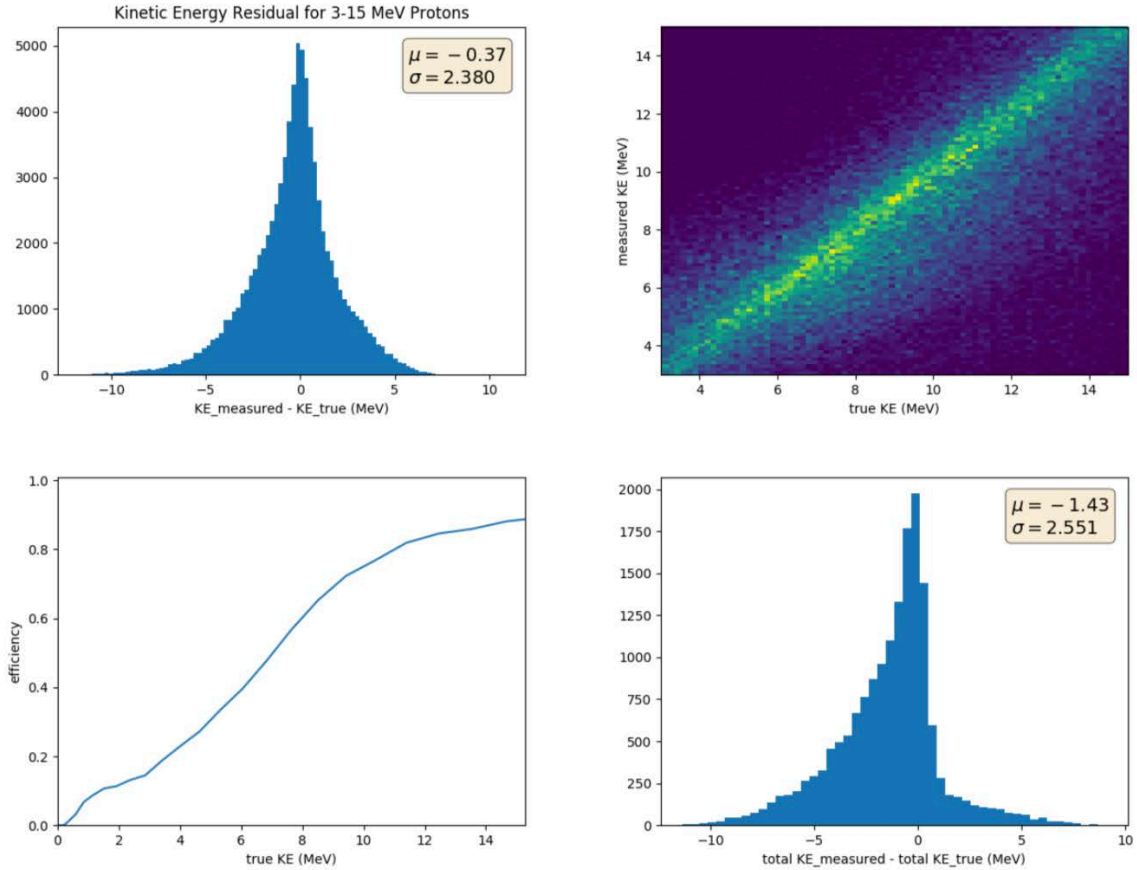

Occupancy considerations

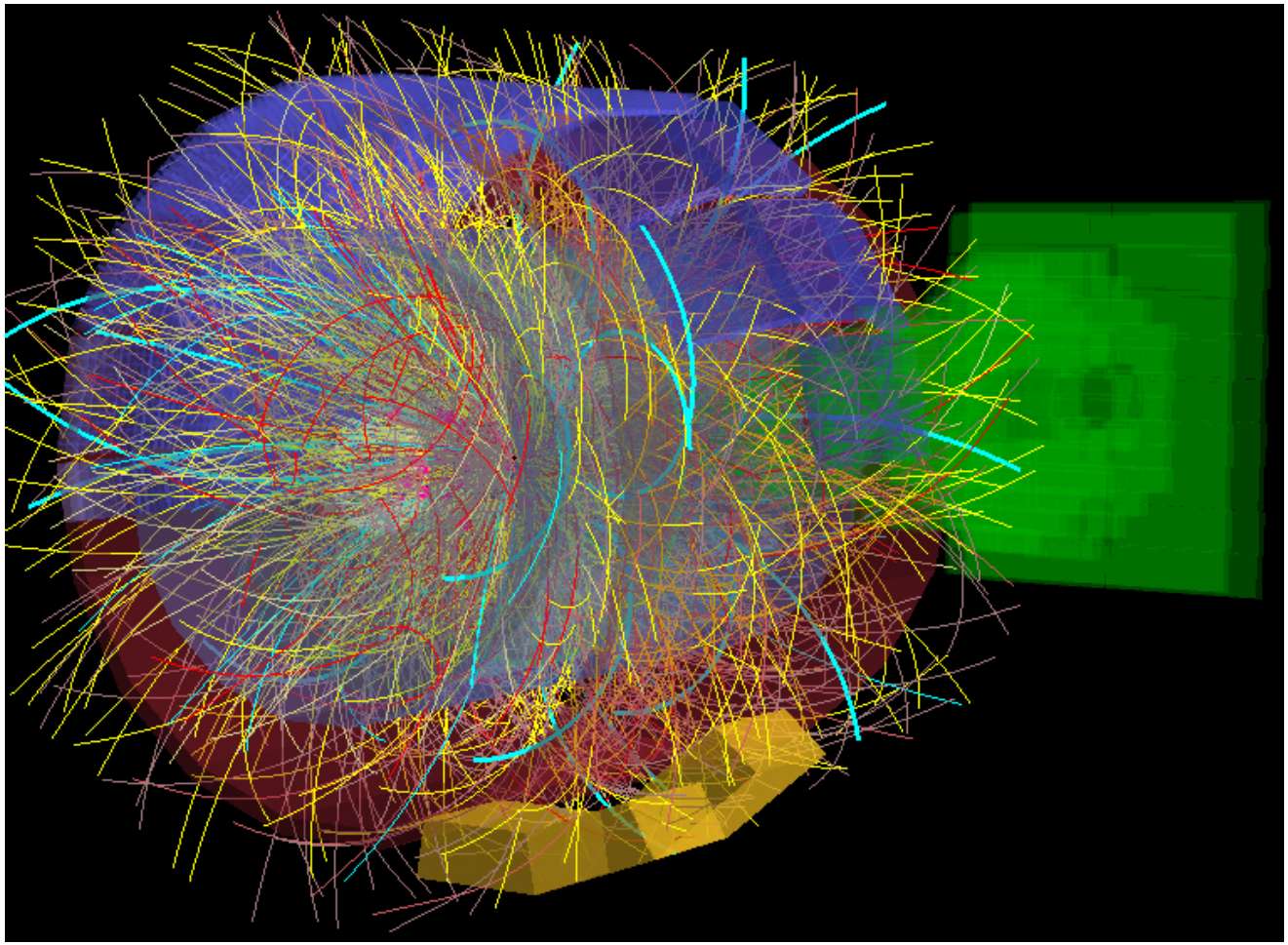

- ALICE tracking eff ~ 90%
- Up to 8000 trks/unit of rapidity
  - **40,000 trks**
- Occupancy 3-4%
- **Our occupancy?**

Occupancy II

- HPgTPC as DUNE ND
  - Detector has ~160M voxels
  - Assuming a charged track occupies 160 voxels
  - 100% occupancy == 1M tracks/spill
- We estimate << 100 tracks/spill *(refine)*
  - **Occupany = $100/10^6$ = 0.01%**

Occupancy III – photon conversion

- We define a *"Vertex Boxel (VB)"* as 10X10X10cm
- With this definition, the HPgTPC has 1M VBs
- ##g conversions in the HPgTPC/spill
  - ##/100M = ###

Photon plots: #Egamma vs. E for conversions
#Egamma vs. E for Compton

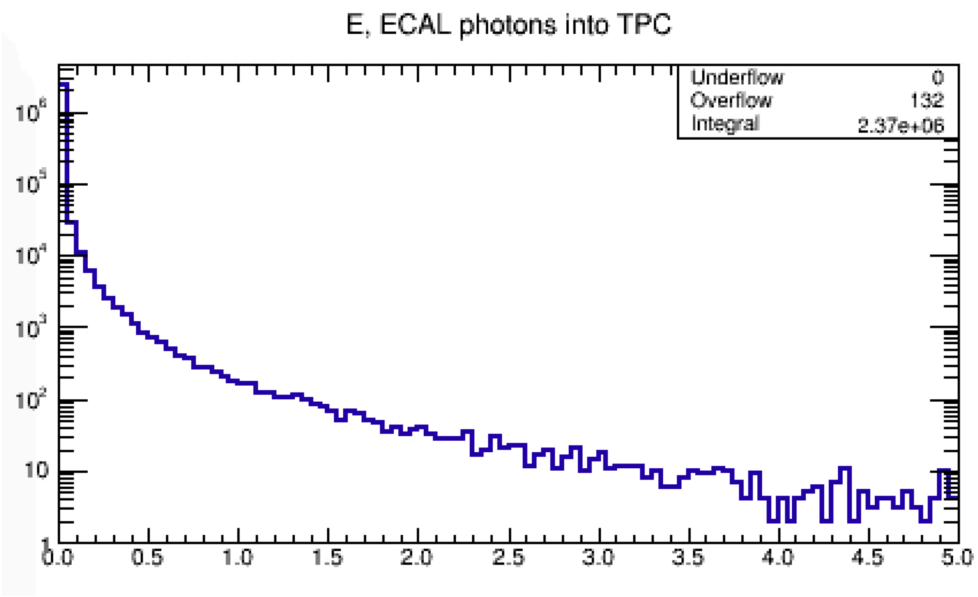

WIP

###s

Backgrounds…..

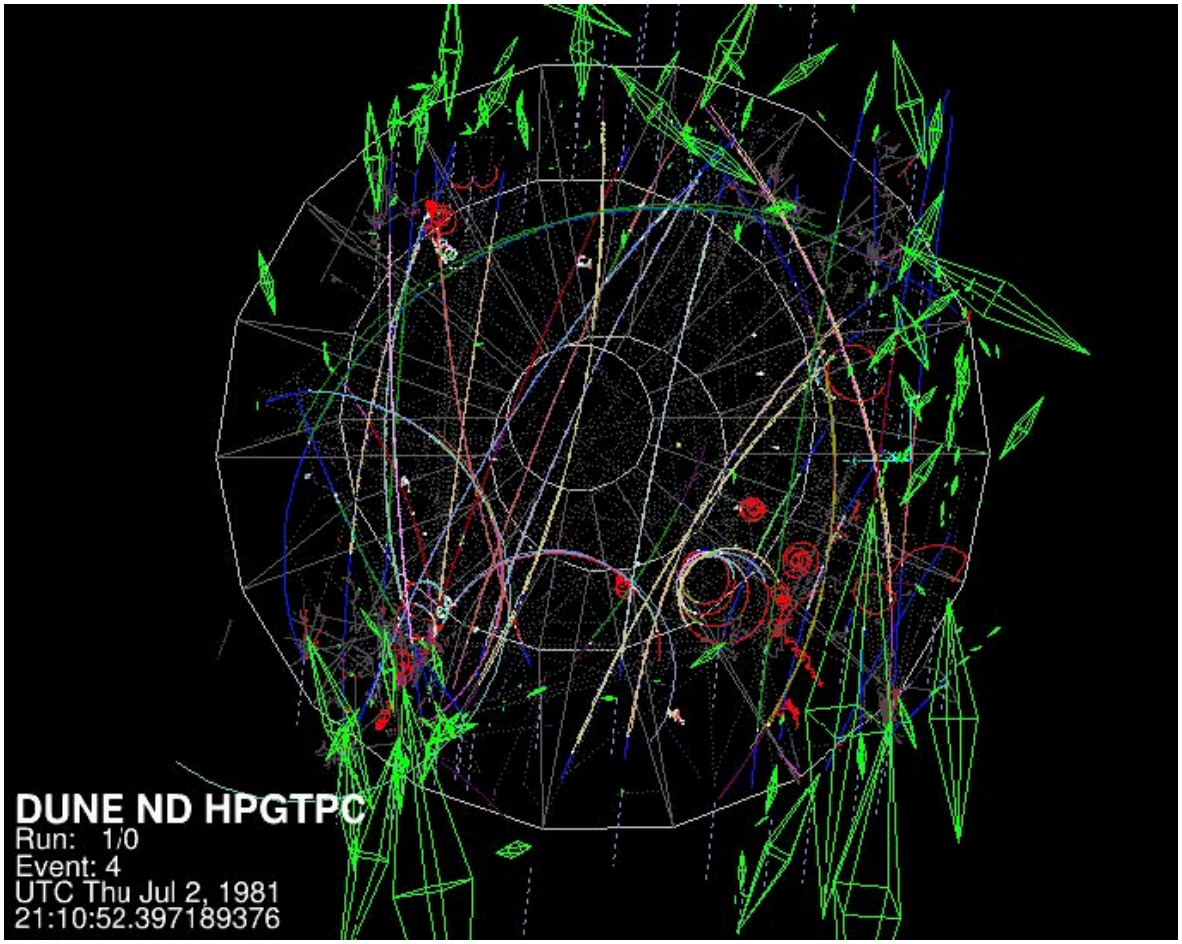

Needs a quantitative narrative for this with #s +…….

Event recon: neutrons

- Top plot: Efficiency for neutron event classes
- Bottom plot shows the relationship between reconstructed and true neutron energy for the three categories laid out above.

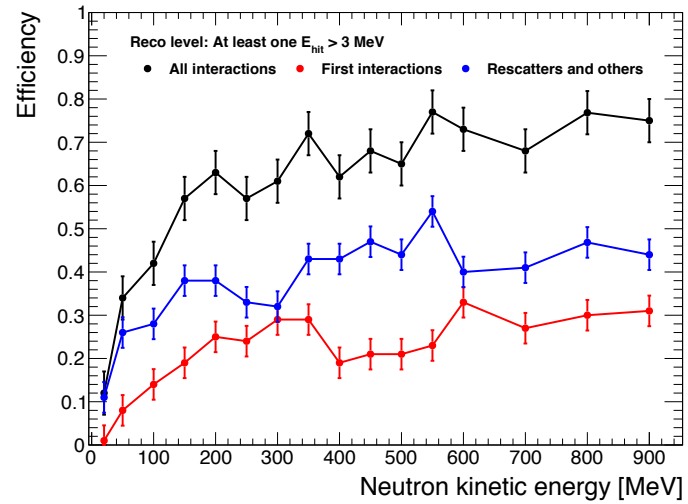

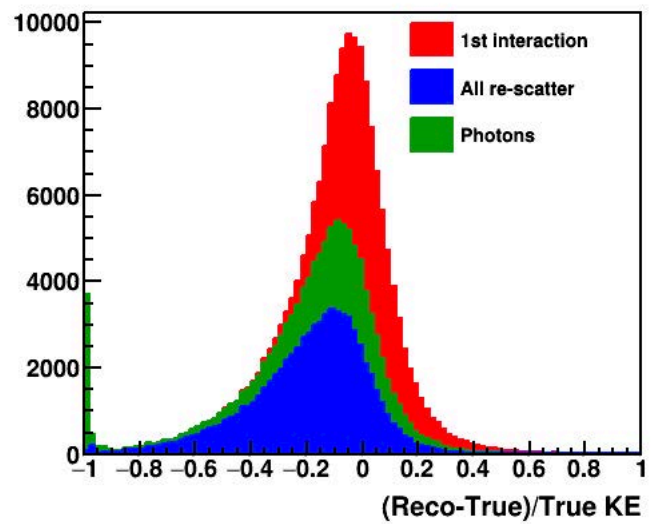

Conclusions

Thank you

BACK UPS

Suggestions regarding what I should include, NOT include, etc.
Will have slides on most important questions. +?

HPgTPC size

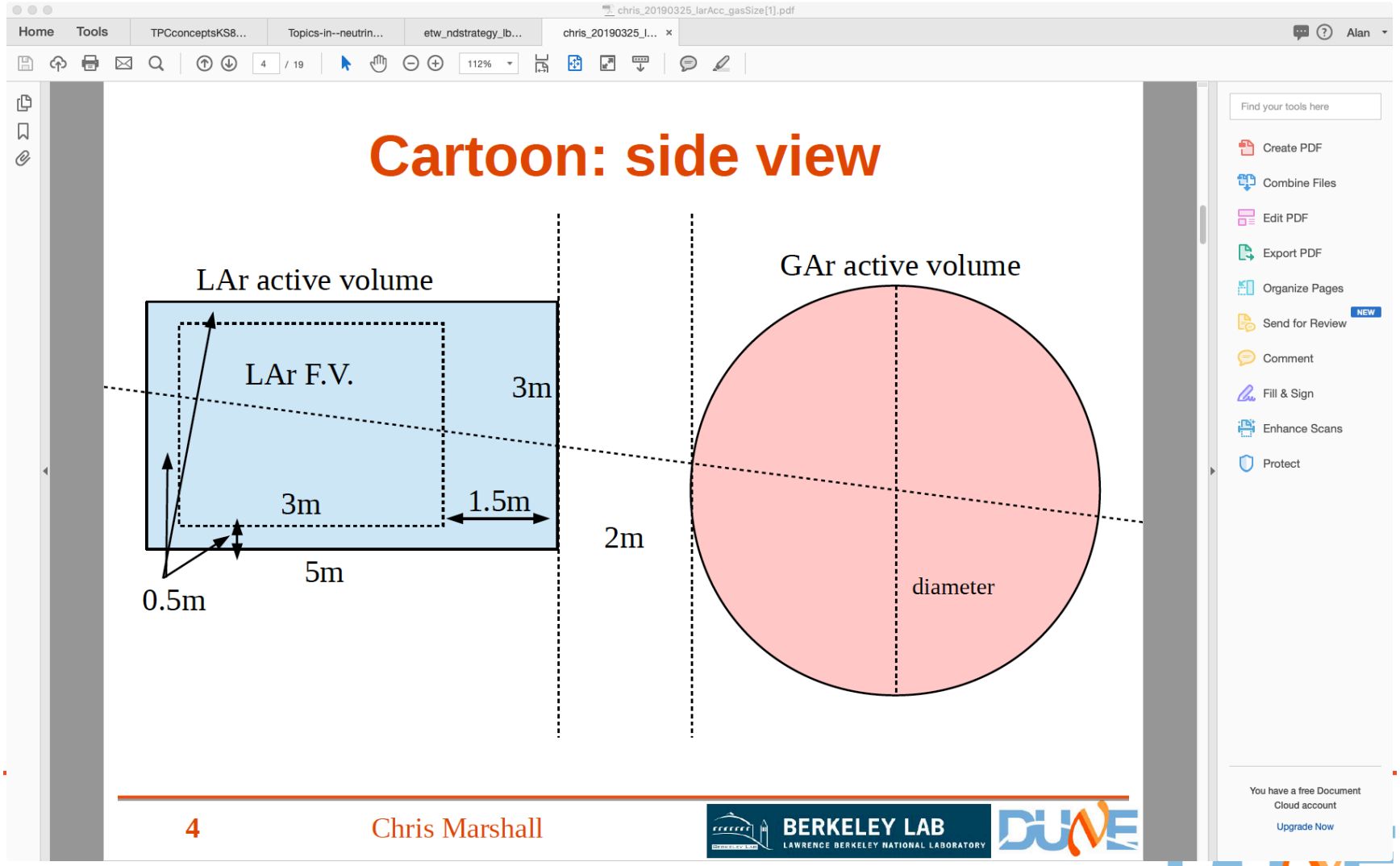
Cartoon: side view
LAr active volume
LAr F.V.
3m
3m
1.5m
5m
0.5m
2m
GAr active volume
diameter
4
Chris Marshall
BERKELEY LAB
LAWRENCE BERKELEY NATIONAL LABORATORY

Model

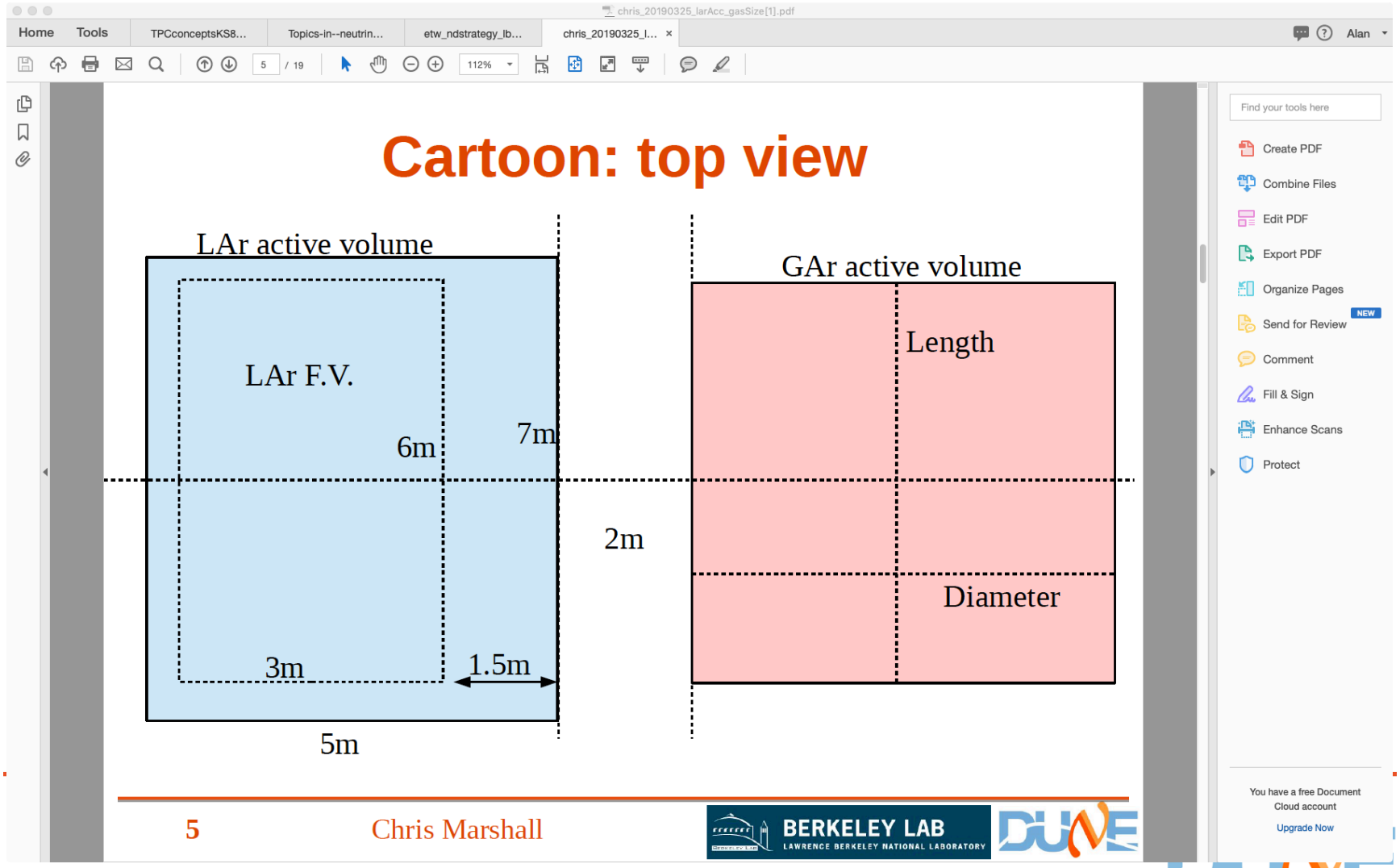
Cartoon: top view
LAr active volume
LAr F.V.
6m
7m
3m
1.5m
5m
2m
GAr active volume
Length
Diameter
5
Chris Marshall
BERKELEY LAB
LAWRENCE BERKELEY NATIONAL LABORATORY
DUNE

Acceptance

Muon acceptance: why

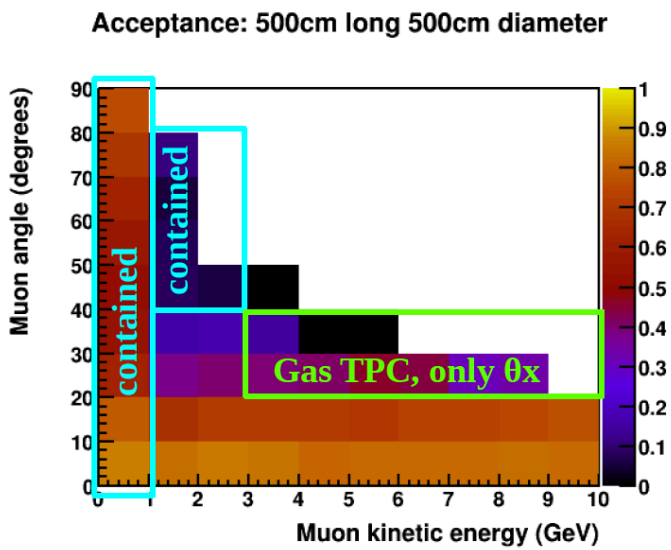

- Events with energy < 1 GeV are primarily contained, and don't depend on gas TPC dimensions
- Also ~2 GeV and high angles are contained
- For 20-30 degrees, match only when events have large angles in XZ plane
- Above 1 GeV, acceptance depends mostly on the angle

Acceptance vs. diameter

chris_20190325_larAcc_gasSize[1].pdf
Home Tools TPCconceptsKS8... Topics-in--neutrin... etw_ndstrategy_lb... chris_20190325_l... Alan
10 / 19 112%

Acceptance vs diameter

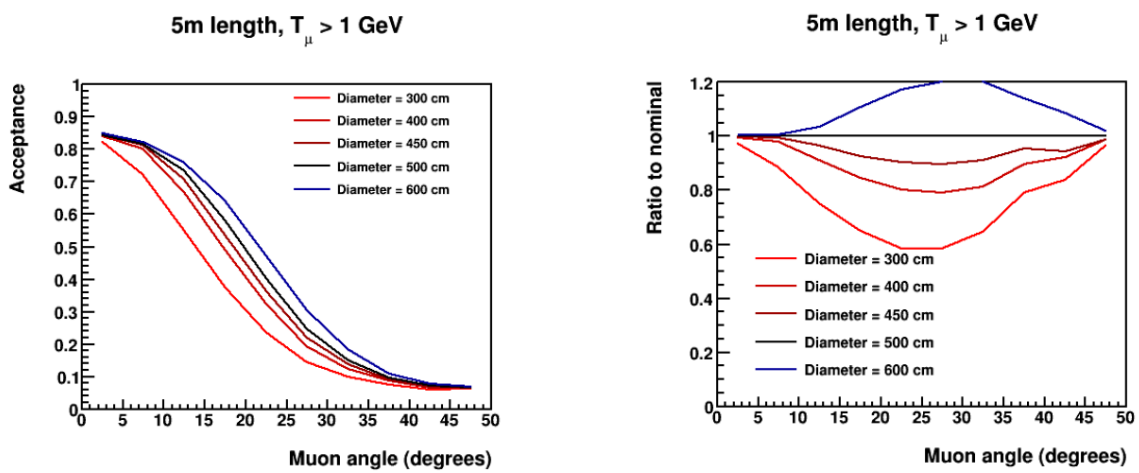

- Same 5m length in X direction, diameter varying between 3m and 6m
- Right plot is ratio to acceptance of nominal dimensions, i.e. 5m length and 5m diameter
- Going to 4.5m is only ~10% loss at worst point

Find your tools here
Create PDF
Combine Files
Edit PDF
Export PDF
Organize Pages
Send for Review NEW
Comment
Fill & Sign
Enhance Scans
Protect
You have a free Document Cloud account
Upgrade Now

Acceptance vs. length

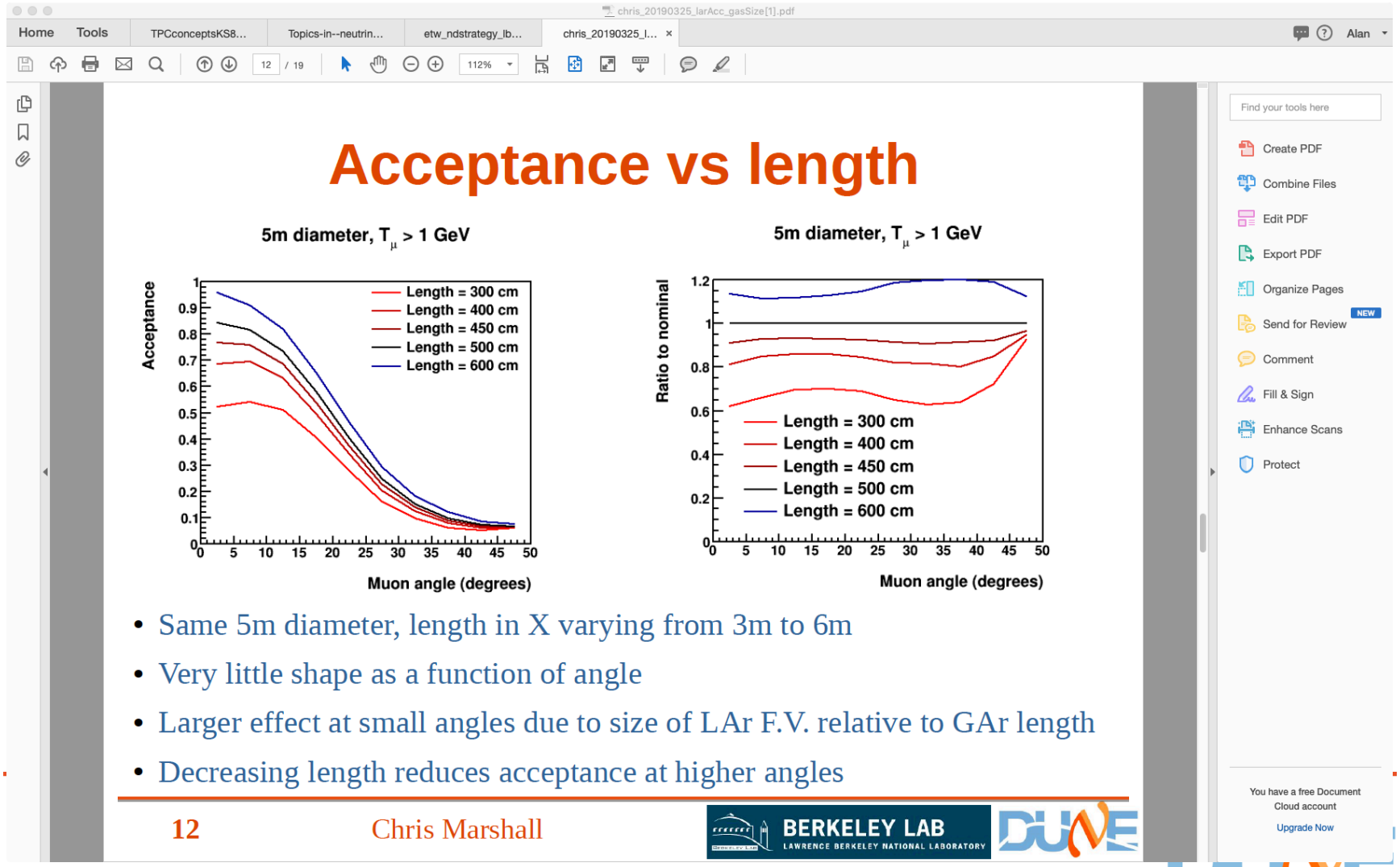

Conclusions

- Acceptance losses due to small reduction in GAr TPC size are not significant, and do not create regions of phase space where there is zero efficiency
- Reducing diameter by >1m, or length by >1.5m, would have significant consequences
- Acceptance is more sensitive to gas TPC length than to diameter due to the larger size of the LAr in that dimension
- Compensating for a reduction in diameter with an increase in length actually improves the acceptance, and saves space in the more constrained Z dimension

chris_20190325_larAcc_gasSize[1].pdf
Home Tools TPCconceptsKS8... Topics-in--neutrin... etw_ndstrategy_lb... chris_20190325_l... Alan
19 / 19 112%
Find your tools here
Create PDF
Combine Files
Edit PDF
Export PDF
Organize Pages
Send for Review NEW
Comment
Fill & Sign
Enhance Scans
Protect
You have a free Document Cloud account
Upgrade Now

Solution 1 - Iron dominated magnet with SC coils – v1

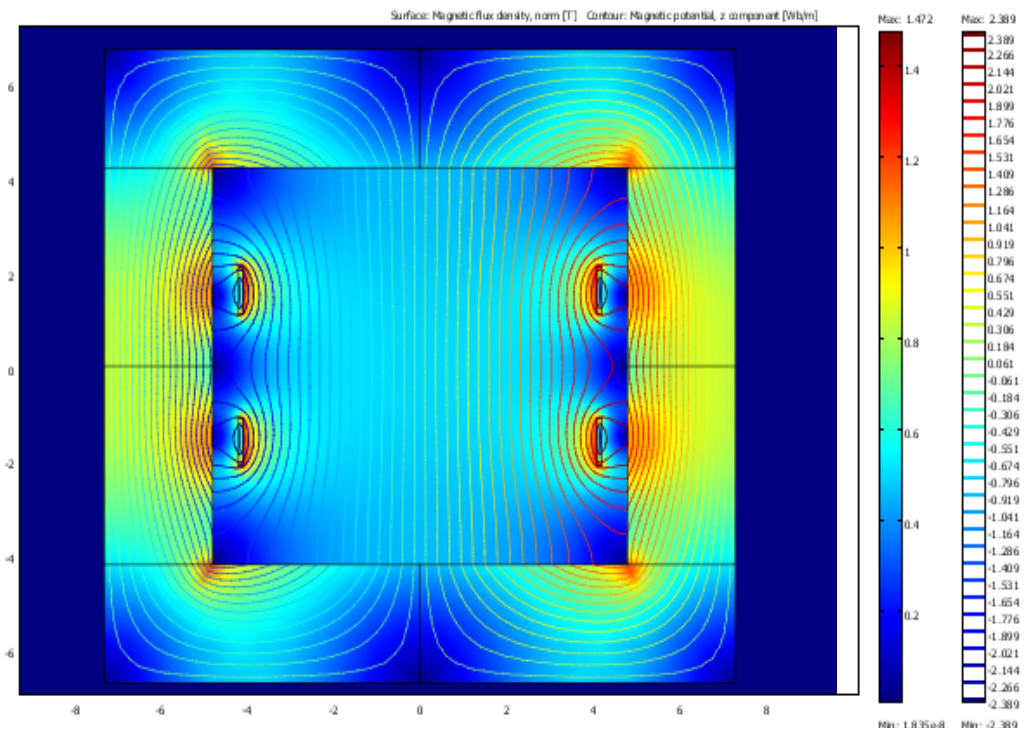

- 2 saddle coils with 119 turns
- 10 km of conductor required
- Current 13.5 kA for a central field of 0.5 T
- Peak field on conductor 1.5 T
- Stored Energy 80 MJ
- Iron

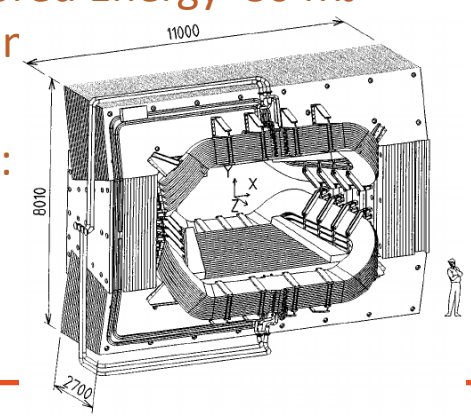

Note:

Solution 1 - Iron dominated magnet with SC coils – v2

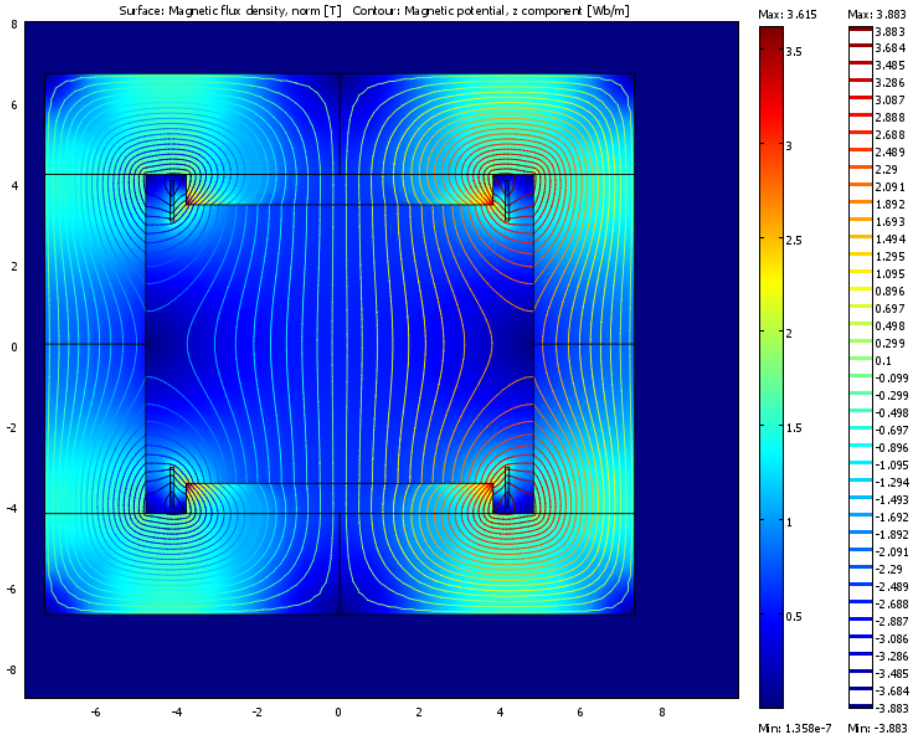

- **2 large racetrack coils** with 119 turns each
- 8.5 km of conductor required
- Current 13.5 kA for a central field of 0.5 T
- Peak Field 2 T
- Stored Energy 120 MJ
- Iron Yoke weigth (10000 t)

Solution 2 – Coil dominated magnet with partial iron yoke – version 1

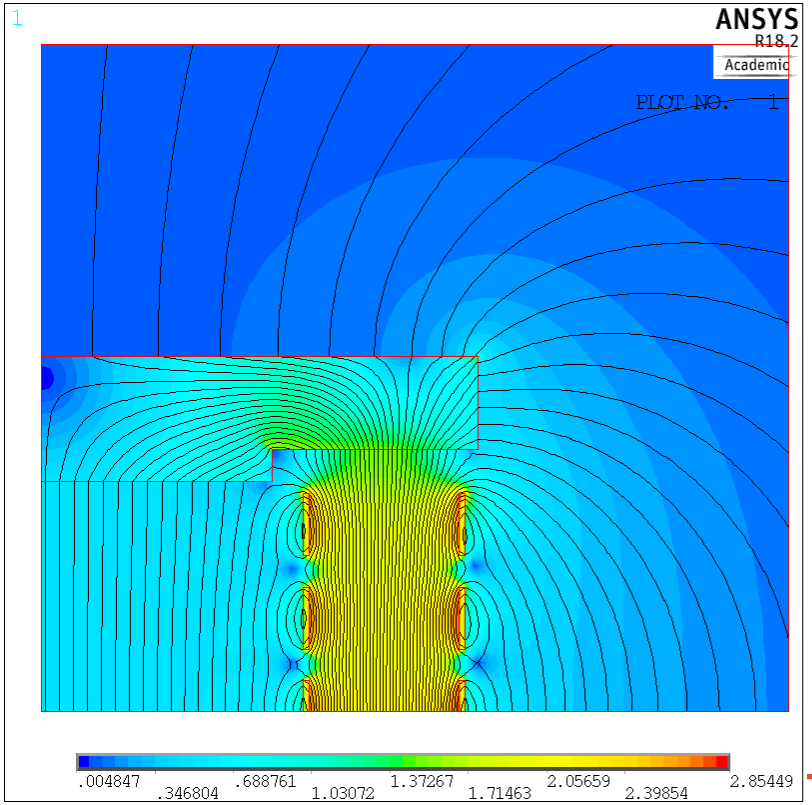

- **10 racetrack** coils with 119 each one
- 32 km of conductor required
- Current 26.7kA for a central field of 0.5 T
- Peak Field 2.85 T
- Stored Energy 828 MJ
- Top and bottom iron yoke (3878 t).
- Magnetic force on yoke 2 MN

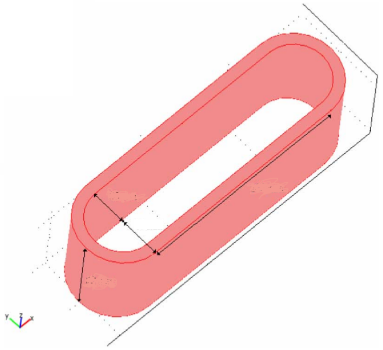

Solution 2 – Coil dominated magnet with partial iron yoke – Optimised versions

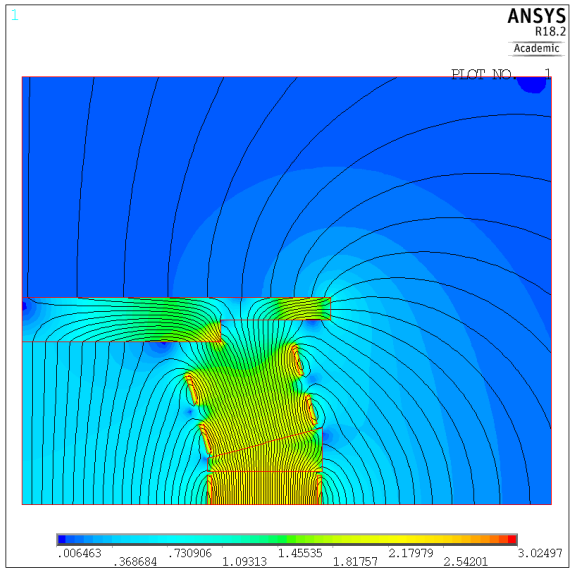

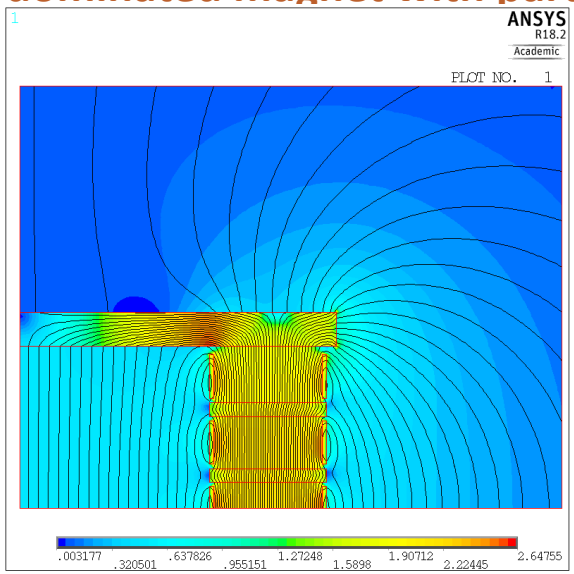

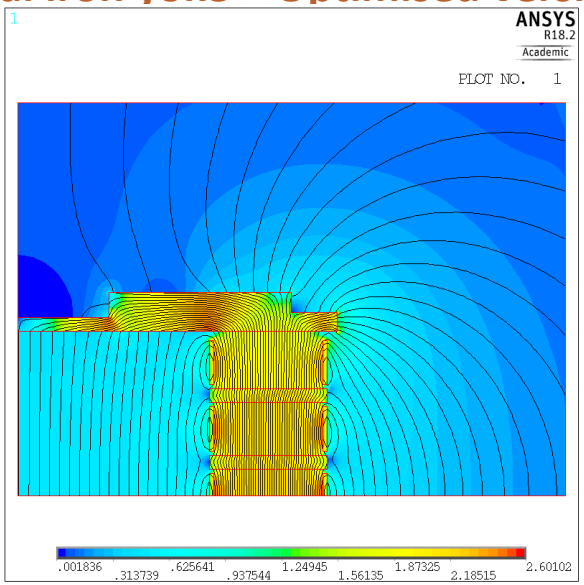

Current	31.5 kA
Peak field	2.78 T
Racetrack coils	12 (792 turns tot.)
Stored energy	611 MJ
Yoke weight	2331 tons

40% less iron; 30% less conductor

Complex mechanics, Less available space

Current	28 kA
Peak field	2.54 T
Racetrack coils	10 (960 turns tot.)
Stored energy	695 MJ
Yoke weight	2135 tons

45 % less iron; 20% less conductor

Current	27.8 kA
Peak field	2.51 T
Racetrack coils	10 (960 turns tot.)
Stored energy	680 MJ
Yoke weight	1868 tons

52% less iron; 20% less conductor (most optimized solution)

Solution 3 – No iron solution

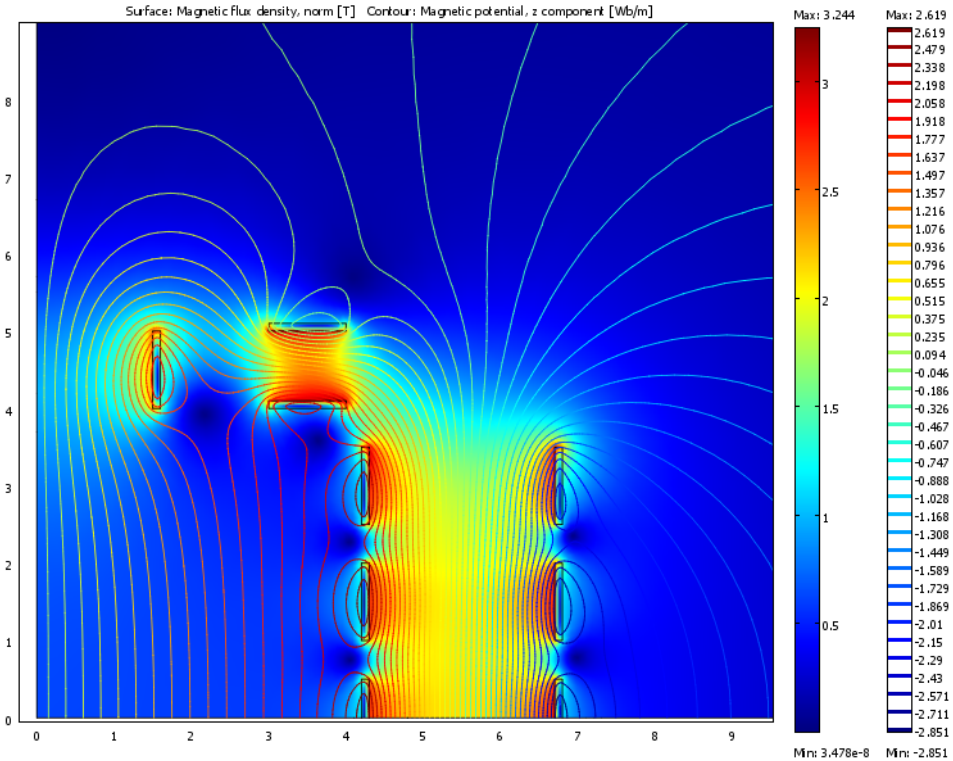

- **16 racetrack** coils (with 119 turn each)
- 47 km of conductor required
- Current 26.7kA for a central field of 0.5 T
- Peak Field 3.2 T
- Stored Energy 1080 MJ

HPgTPC Test Stand @ FNAL

- **G**aseous-Argon **O**peration of the **A**LICE **T**PC, **GOAT**
  - Test ALICE readout chambers at 10 atm and in various gas mixture (currently 90-10 Ar-CO_2)
  - Develop full front-end electronics chain
- Various components in **GOAT**:
  - Signal readout with ALICE **IROC**
  - **Field cage**
  - Front-end with preamps and CAEN digitizers
- Upgrades to components underway; stay tuned!

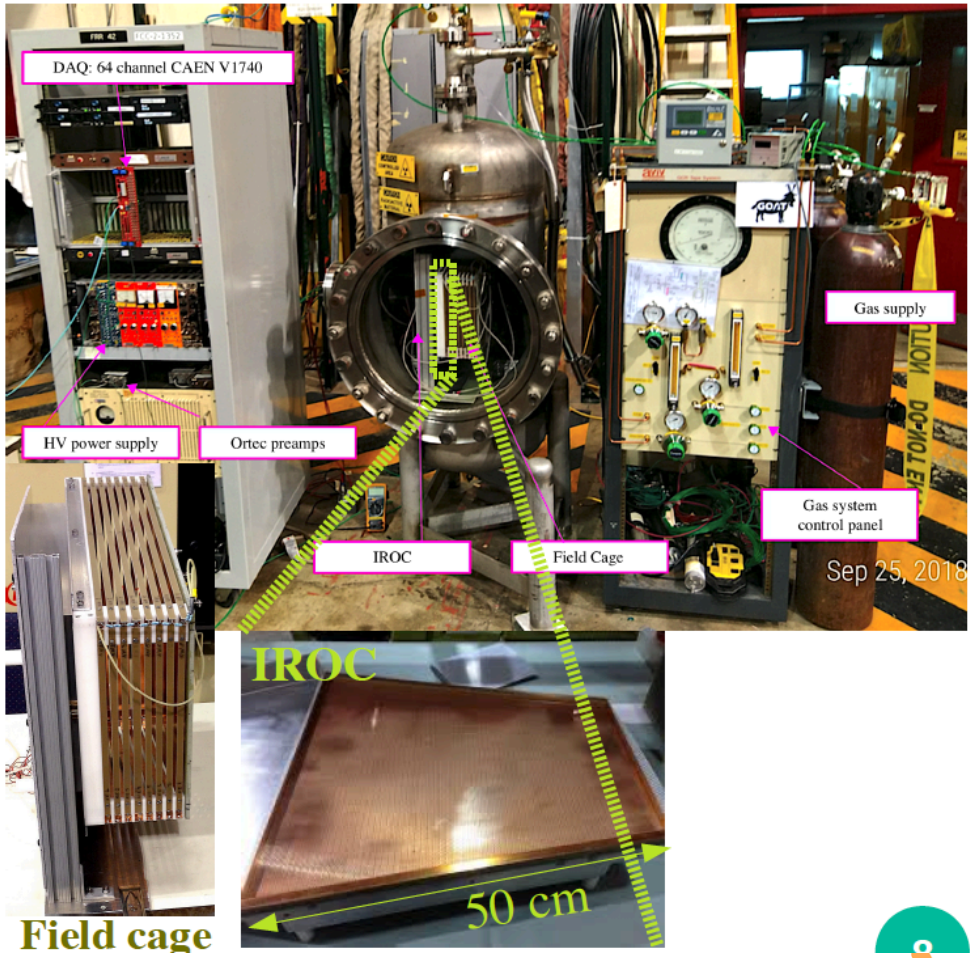

OROC Test Stand @ RHUL

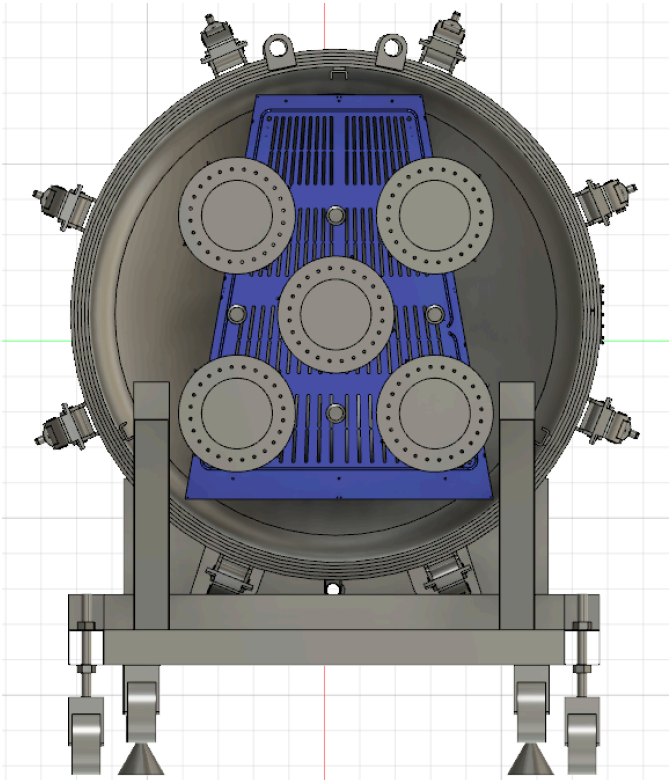

Groups at Royal Holloway & Imperial College London are getting involved with tests of ALICE readout chambers
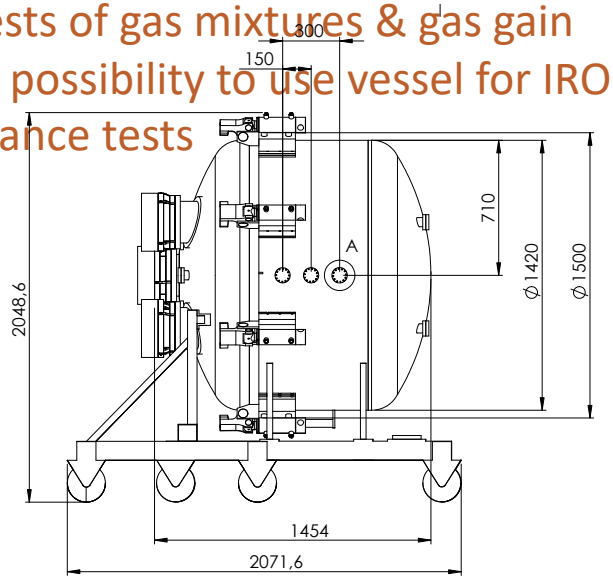
- 5 bar pressure vessel will accommodate one OROC
- Plan tests of gas mixtures & gas gain
- Future possibility to use vessel for IROC/OROC acceptance tests