KLOE/3DST Overview

Davide Sgalaberna (CERN)
for the 3DST+KLOE working group

21st of October 2019

The goals of the KLOE/3DST system

- Measuring CP violation by detecting a spectrum distortion requires a precise beam monitoring with the following functionalities in a few-days basis
  - Event rate: requires a large-mass active detector
  - Beam width: requires relatively large width and segmentation
  - Spectrum: requires a spectrometer to measure the particle momenta
- Measure the neutrino and antineutrino flux using different but complementary methods
- Precise measurements of neutrino interactions in other materials than argon with neutron detection
  - Complementary measurements to Argon target detectors
  - Form a robust ND system as a whole against uncertain and unknown systematic error sources
- One of the key tools is detecting and measuring the neutron energy on an event-by-event basis
  - Lack of knowledge on neutron content is a known source of uncertainty in calorimetric energy reconstruction. Different for neutrino and antineutrino interactions
  - Powerful avenue to explore and improve interaction models and measure the flux with minimal cross-section model dependence

The KLOE/3DST in Near Detector system

- ArCube and MPD detectors will move off-axis (DUNE-PRISM)
- The only detector always on-axis will be KLOE/3DST
  - ✦ 3D scintillator tracker as active neutrino target
  - ✦ Low-density tracker to precisely measure particles escaping from the scintillator
  - ✦ Electromagnetic CALorimeter (ECAL)
  - ✦ Superconducting solenoid magnet

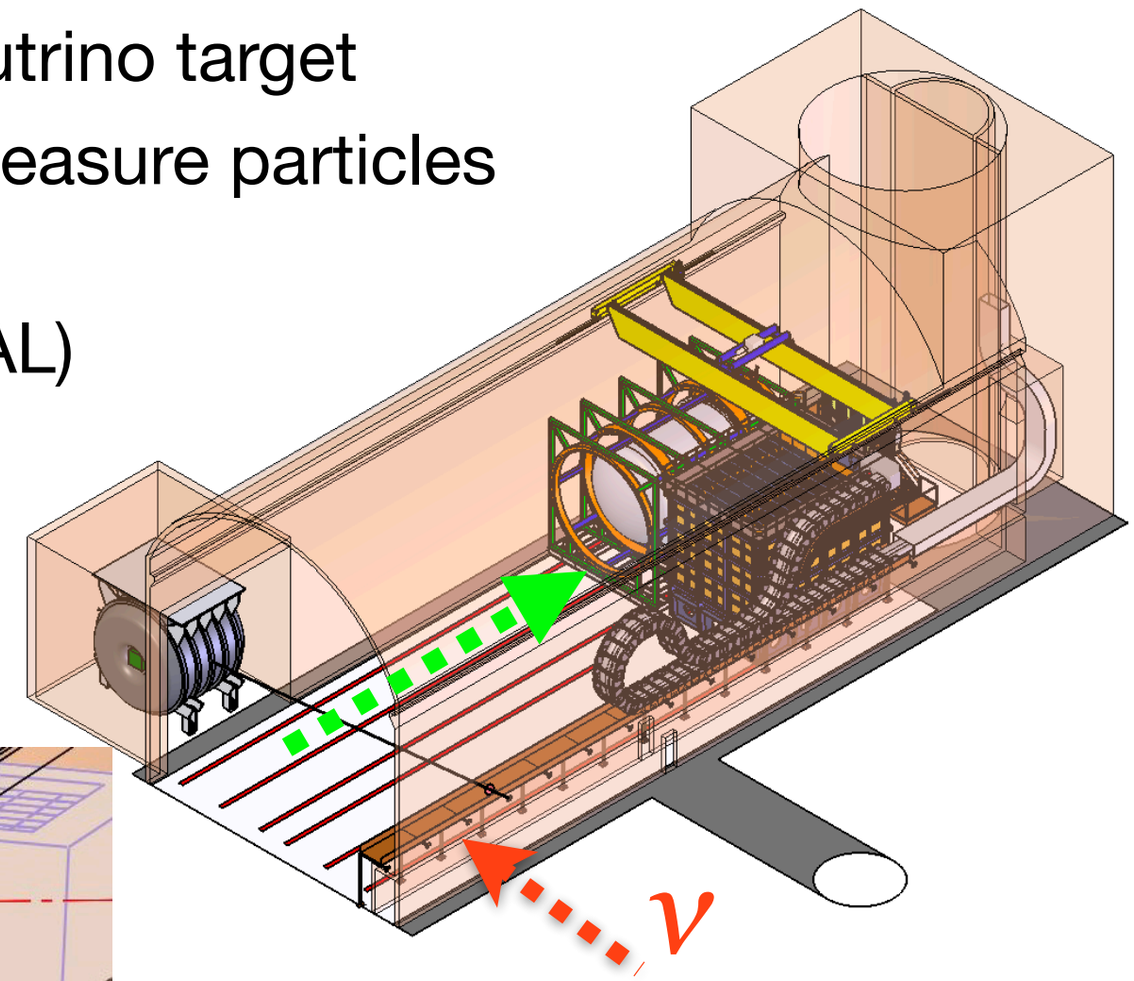

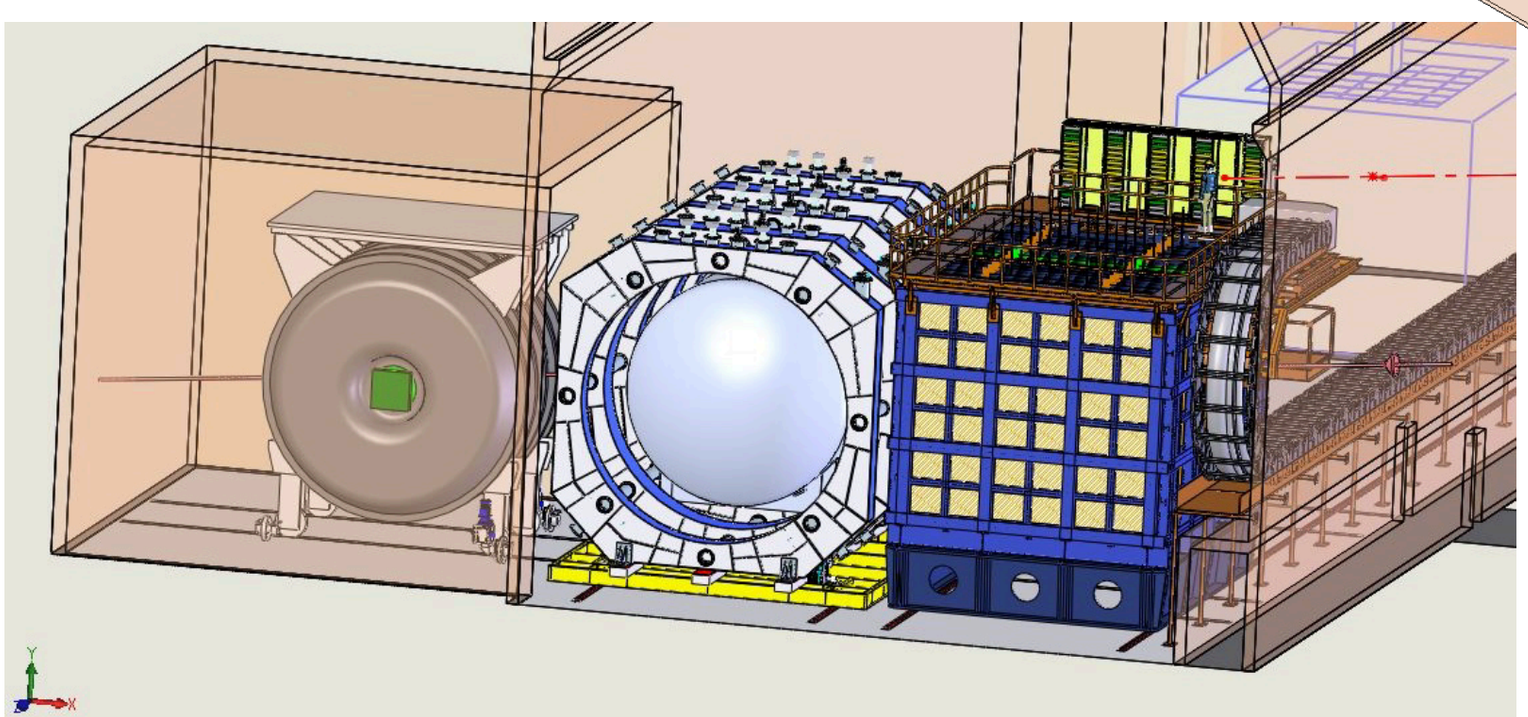

The 3D Scintillator Tracker

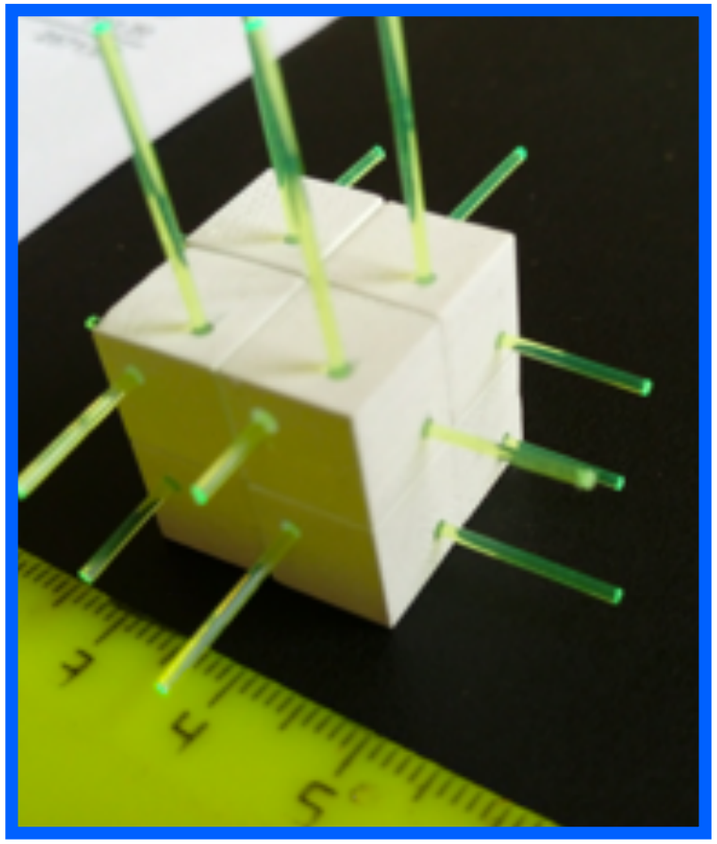

2018 *JINST* **13** P02006
NIM A936 (2019) 136-138

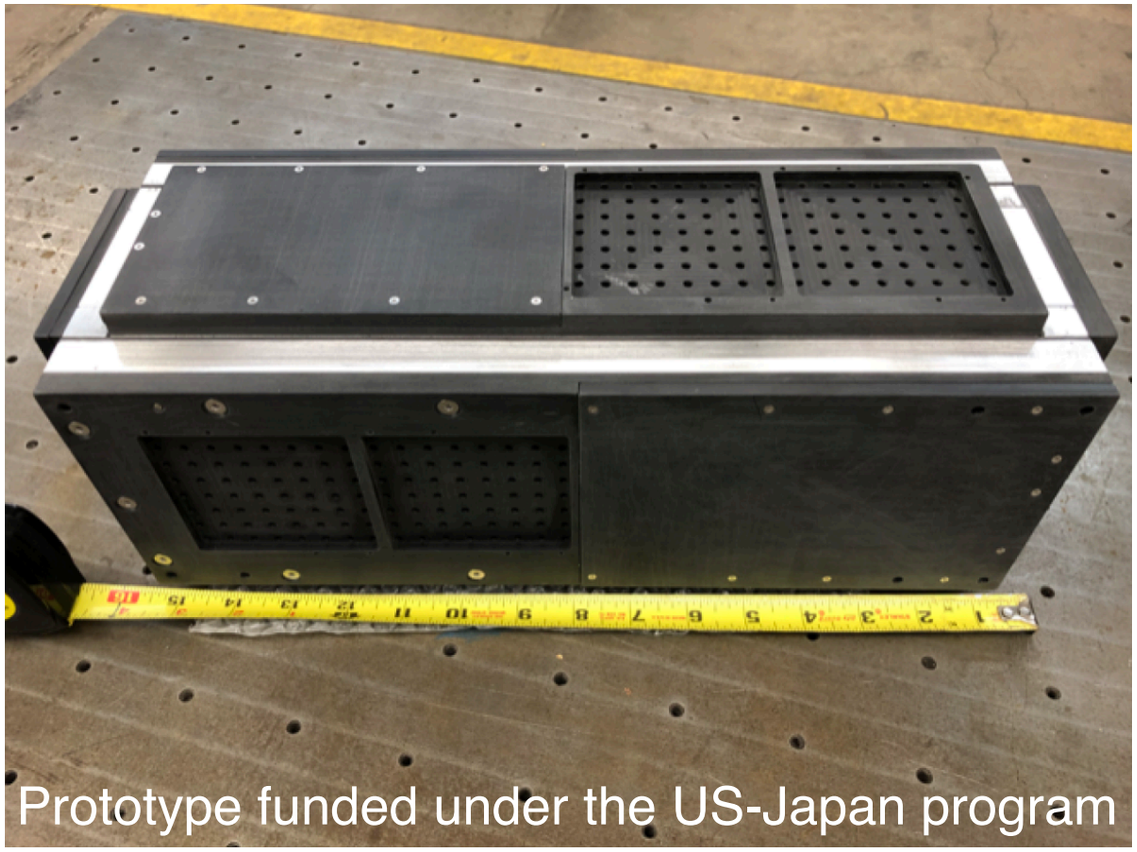

Prototype funded under the US-Japan program

- Detection efficiency at 4π (>90% for muons)
- Muon p resolution by range ~2-3%
- Detect protons above ~300 MeV/c
- Time resolution ~ 0.9ns per channel (MIP), i.e. ~0.5ns per cube (MIP)
- Very good neutron detection capability

It will be installed in the T2K Near Detector in fall 2021 (arXiv:1901.03750)

CERN-SPSC-2018-001
SPSC-P-357
arXiv:1901.03750

The 3D Scintillator Tracker

The design is based on the R&D performed for the T2K SuperFGD detector

Optimization of the box thickness will depend on FEA results and internal cube structure

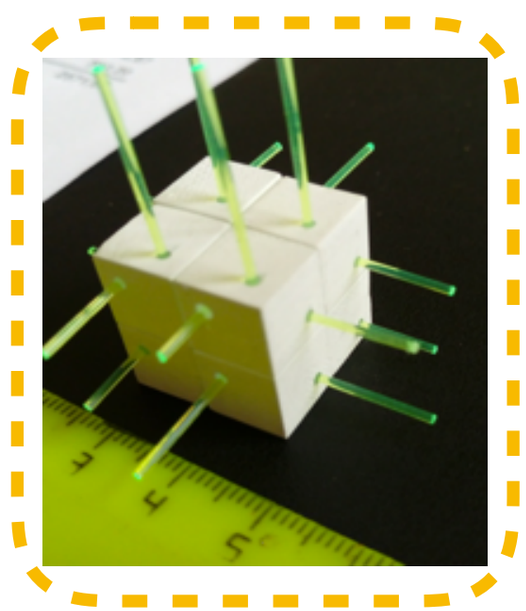

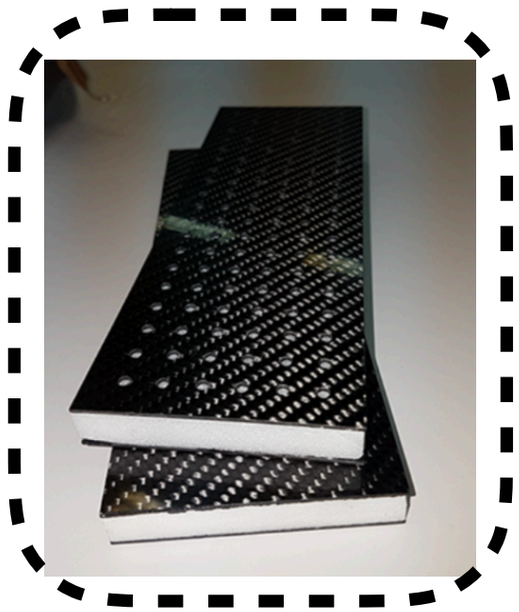

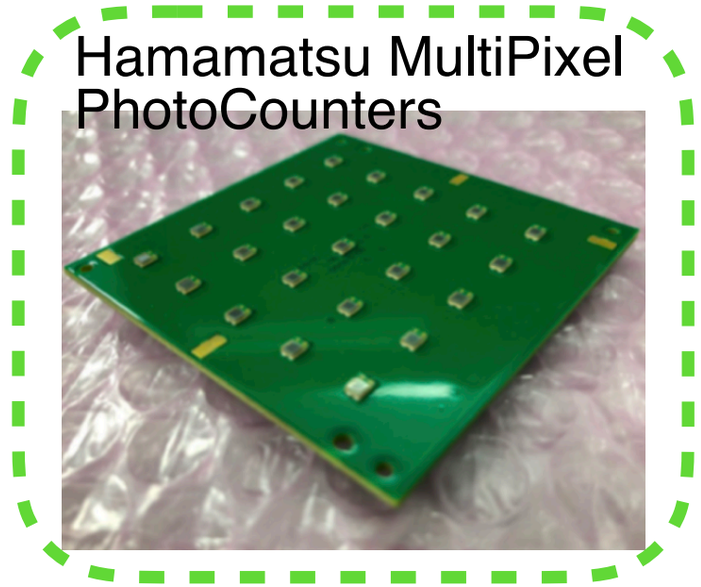

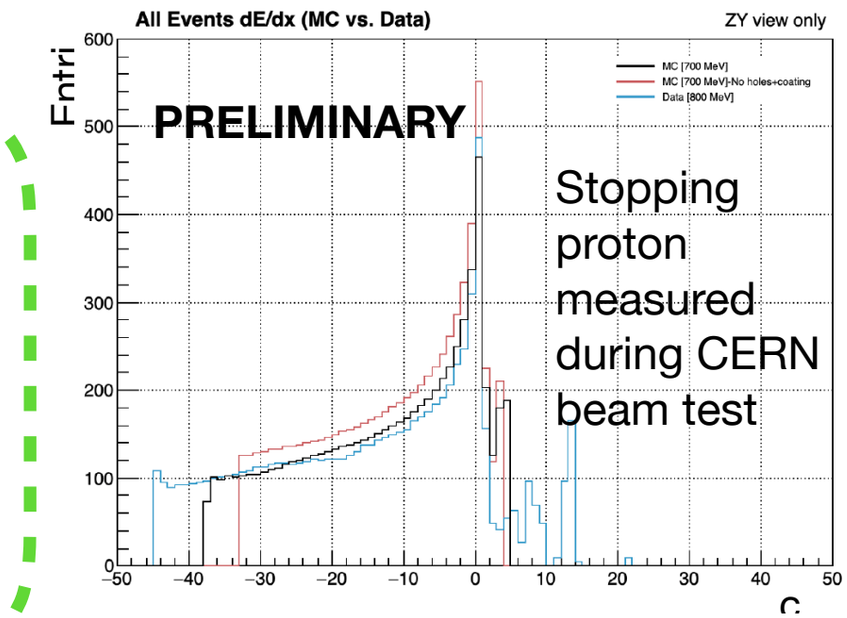

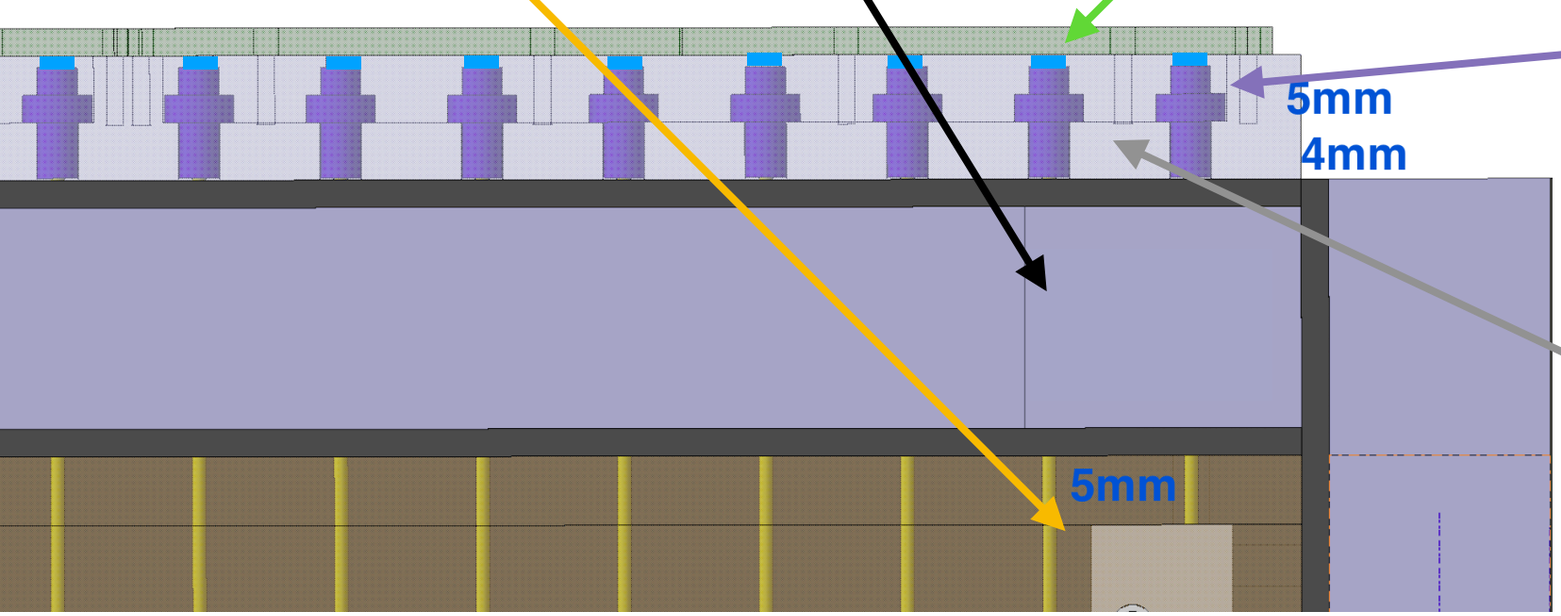

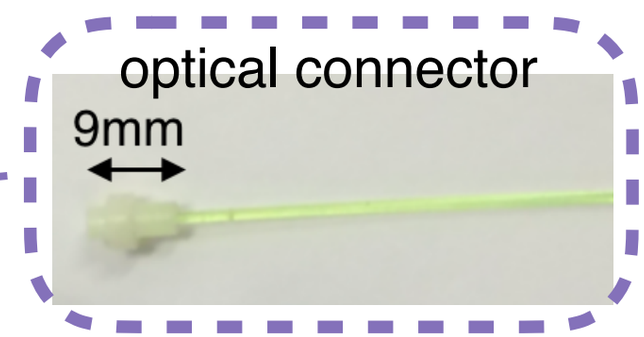

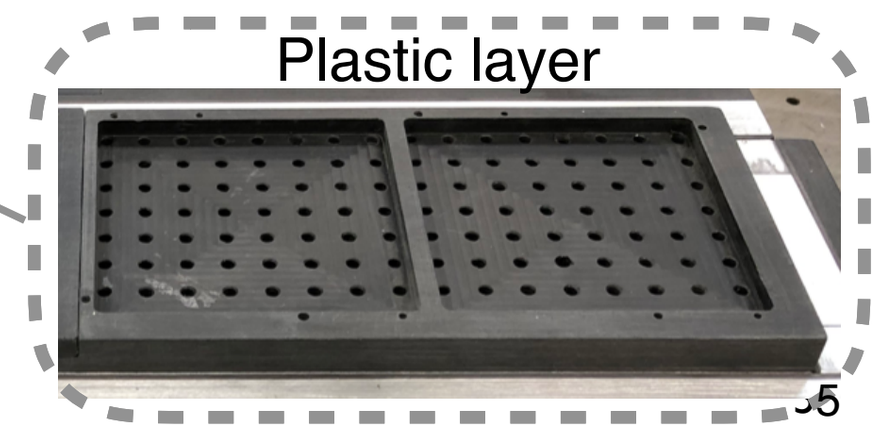

NIM A 419 (1998) 320–325
NIM A482 (2002),364

The KLOE detector

- Operated at DAΦNE (LNF) from 1999 till March 2018 with good performances and high efficiency for electron and photon detection and good pion/muon/electron separation
- The magnet and the electromagnetic calorimeter will be used at the DUNE ND

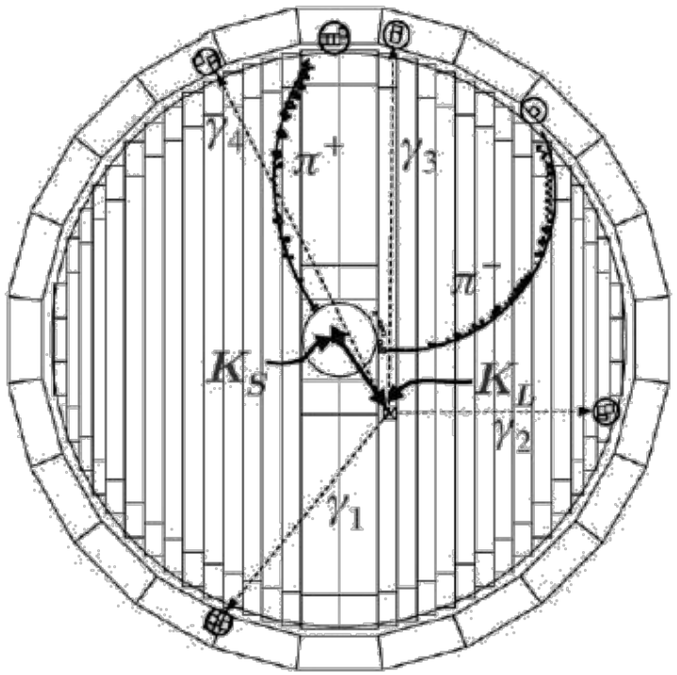

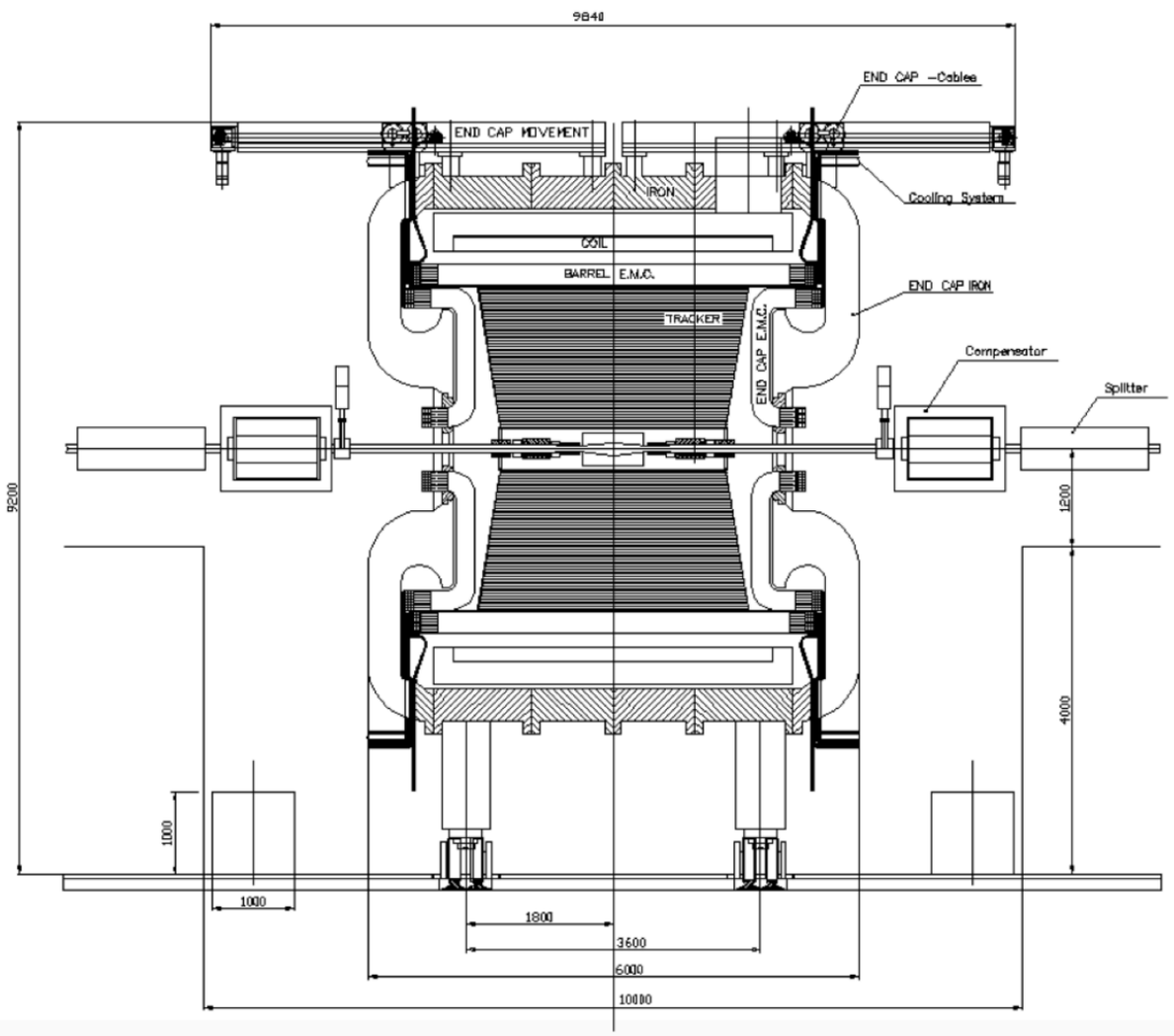

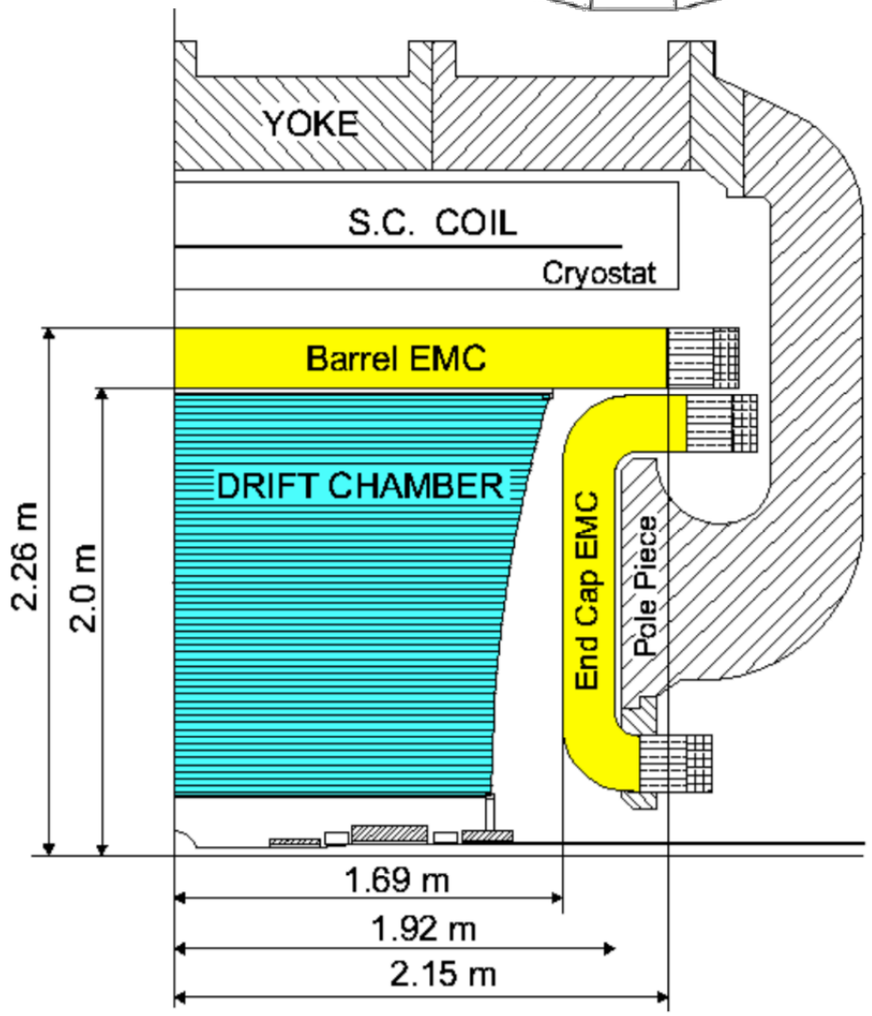

NIM A 419 (1998) 320–325
NIM A482 (2002),364

The KLOE Magnet

- Superconducting magnet
- B-field ~ 0.6 T in the center

Layers	2
Turns/layer	368
Ampere-turns	2.14 MA-T
Operating current	2902 A
Stored energy	14.3 MJ
Inductance at full field	3.4 H
Discharge voltage	250 V
Peak quench temperature	80 K

Source	Heat load
Current leads	0.6 g/s
4 K Radiation and conduction	55 W
70 K Radiation and conduction	530 W

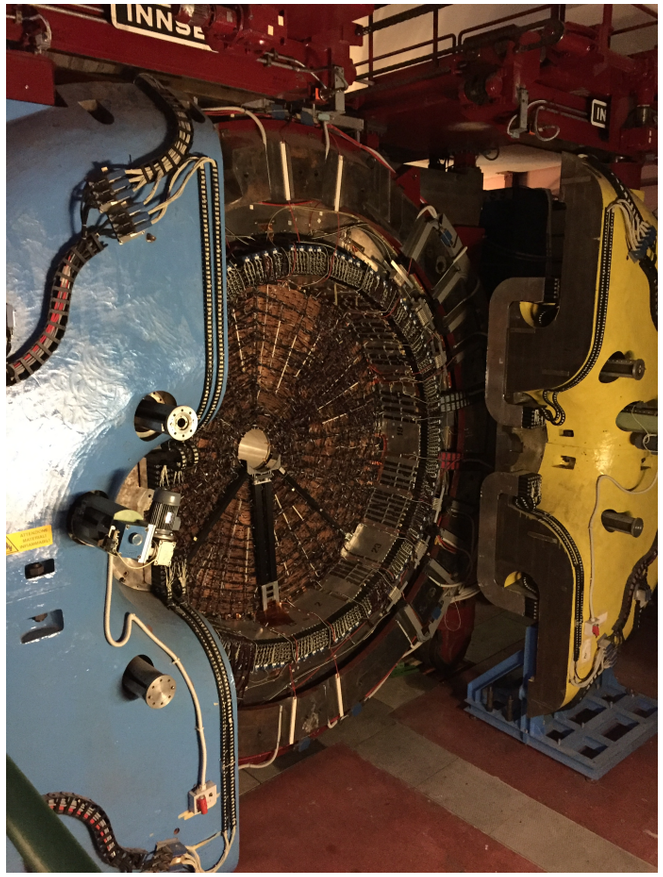

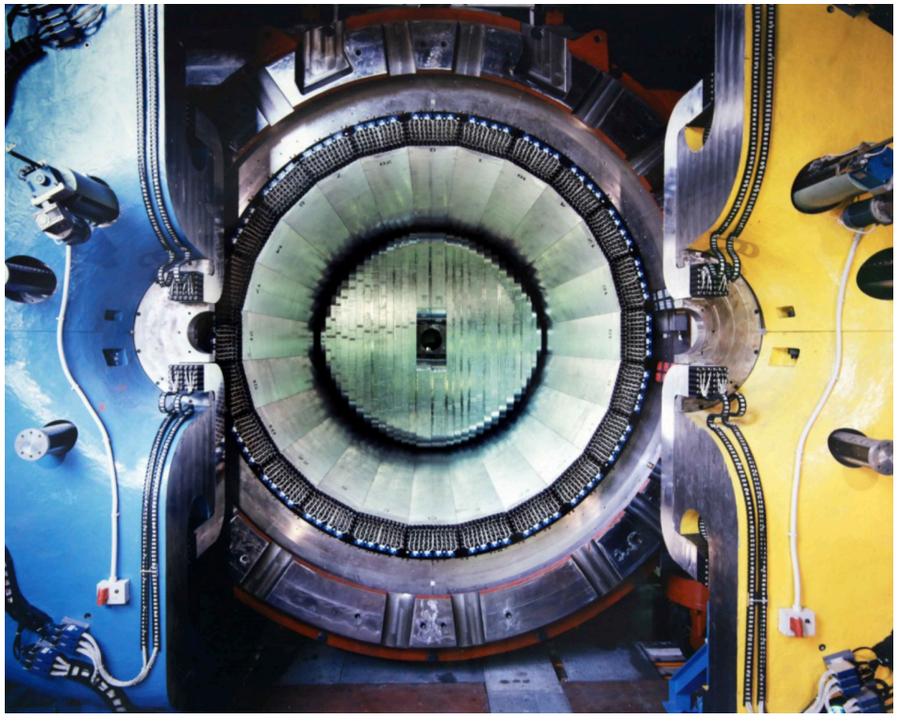

NIM A 419 (1998) 320–325
NIM A482 (2002),364

The KLOE ECAL

More details in
L. Di Noto's talk

- KLOE electromagnetic calorimeter ~15 X_0 ECAL
- Module made of 5 bars 4.4cm granularity, 4880 channels
- 1 mm diameter sci.-fi. (Kuraray SCSF-81 and Pol.Hi.Tech 0046)
- Lead:Fiber:Glue volume ratio = 42:48:10 (thickness = 23 cm)

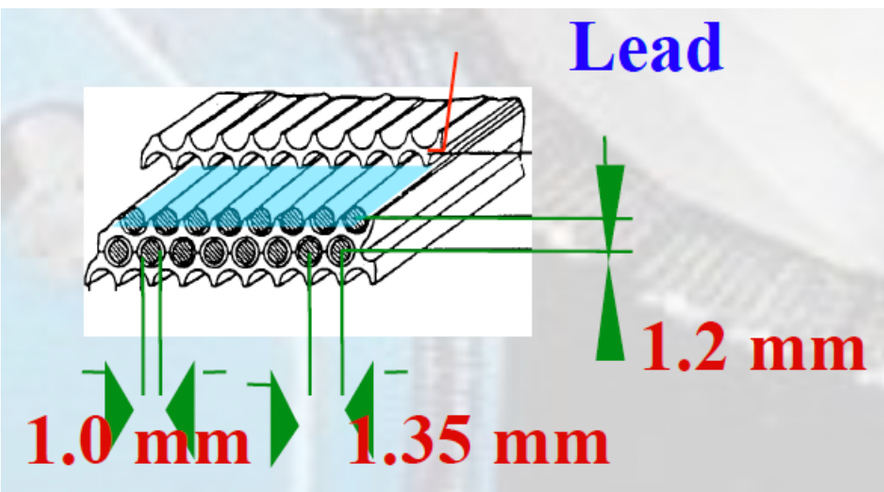

$$\sigma_E = 5.7\,\% \,/\, \sqrt{E_{dep}(GeV)} \qquad \sigma_t = 54 \text{ ps} \,/\, \sqrt{E_{dep}(GeV)}$$

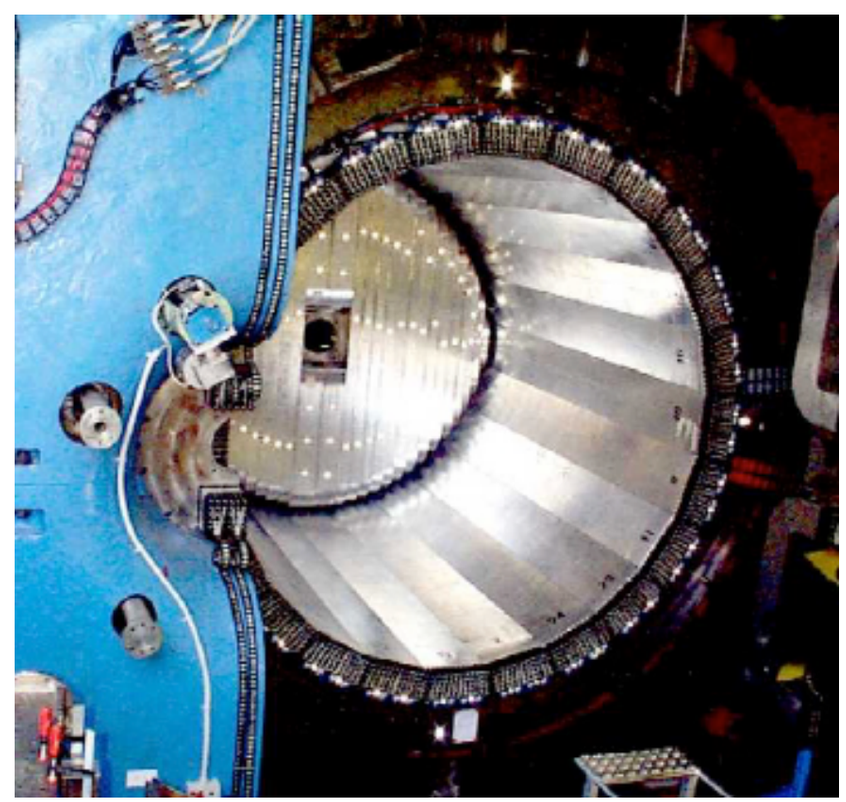

Plan: cool down KLOE and perform cosmic rays run before disassembling it

KLOE/3DST configuration

By Bob Flight

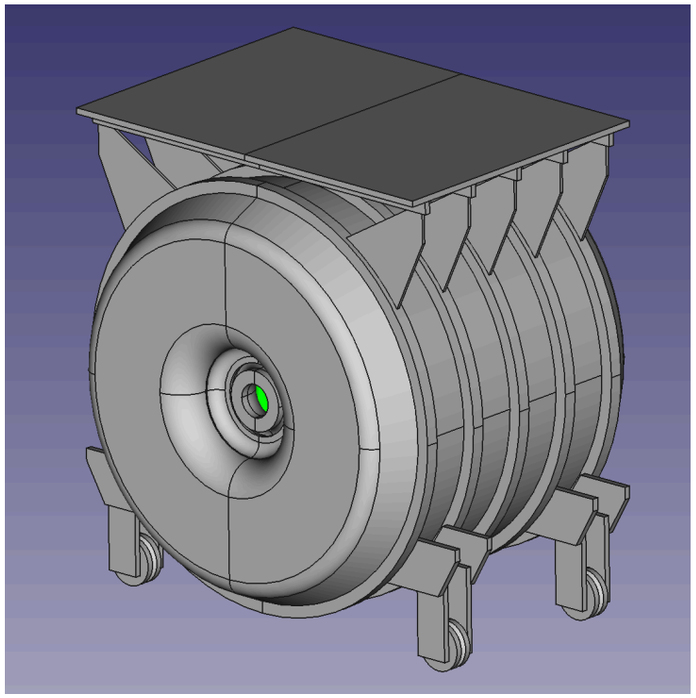

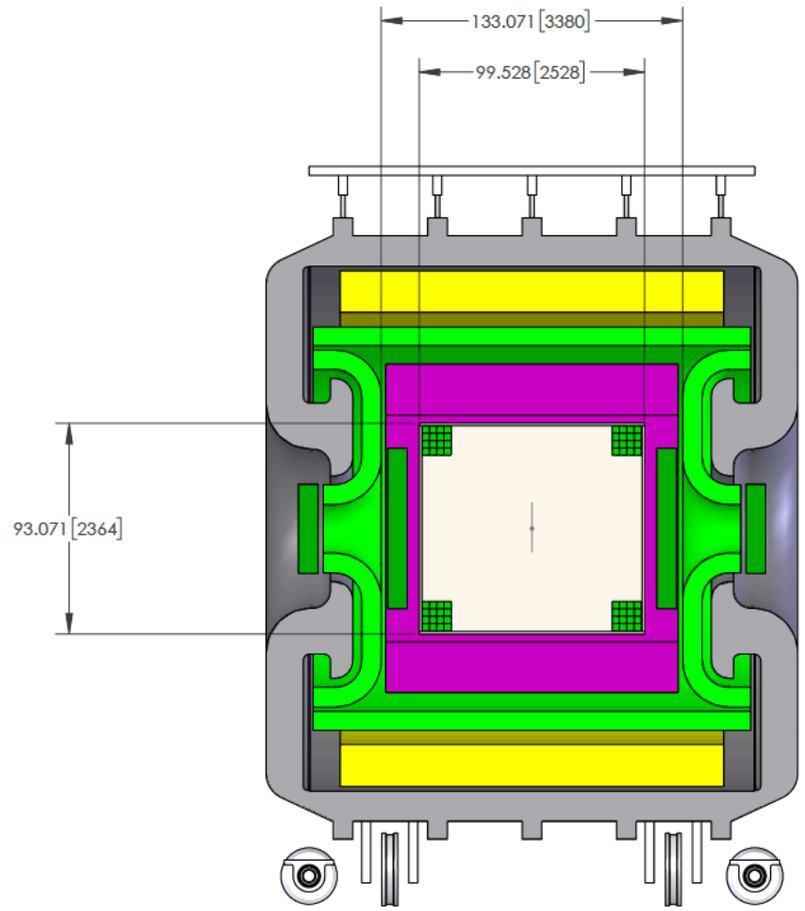

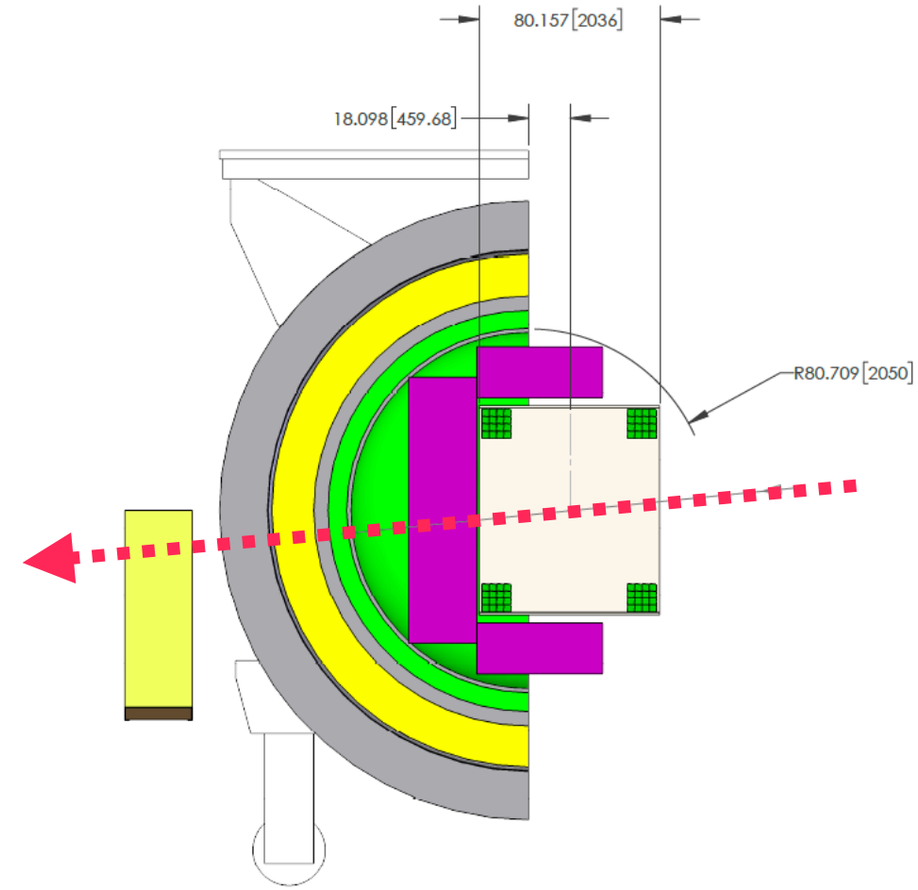

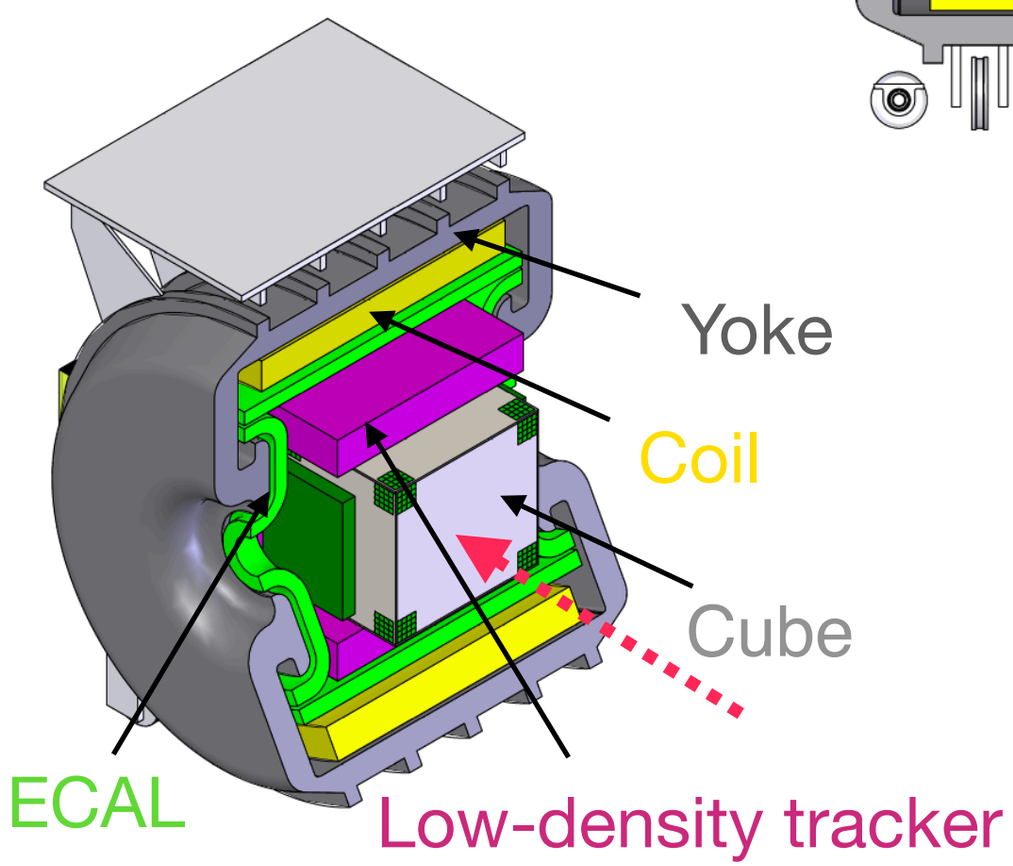


```
3DST inside KLOE:
2.24x2.4x1.92 m³
10,941,235 tons
```

- This drawings are used for all the simulations studies
- Optimization of the low-density tracker geometry is ongoing

Working Group organization

- At the Magnet workshop @Fermilab in early September we discussed about possible physics measurements and detector system configurations, involving 3DST/KLOE and either TPCs or Straw Tubes as low-density tracker with pros/cons

- We formed a single unified working group, ramping up quickly, with the goal of optimizing the system upon physics studies

- Conveners of the new group: Lea Di Noto (INFN Genova), Federico Ferraro (INFN Genova), Paola Sala (INFN Milano), Davide Sgalaberna (CERN), Matteo Tenti (University of Bologna), Guang Yang (Stony Brook University)

- We had the kick-off joint 3DST+KLOE meeting on the 9th of October and a second meeting on the 18th of October

- We aim to have a set of complete studies ready for the CDR

The detector system configuration

- At the magnet workshop @Fermilab we agreed to investigate two main configurations of the low-density tracker:
  - ✦ 3DST + TPC tracker: (baseline 3DST, 2.4X2.4X2m^3 plus TPC trackers)
  - ✦ 3DST + Straw tracker (baseline 3DST, 2.4X2.4X2m^3 plus balance of volume filled)
- The system will be optimized upon physics studies that will be performed in the near future

Option 3DST+TPC

- TPCs similar to those that will be installed in the T2K near detector in fall 2021
- Extensive R&D for ILC: new design of resistive micromegas for T2K with cosmics test at CEA Saclay, beam tests at CERN and DESY

arXiv:1907.07060

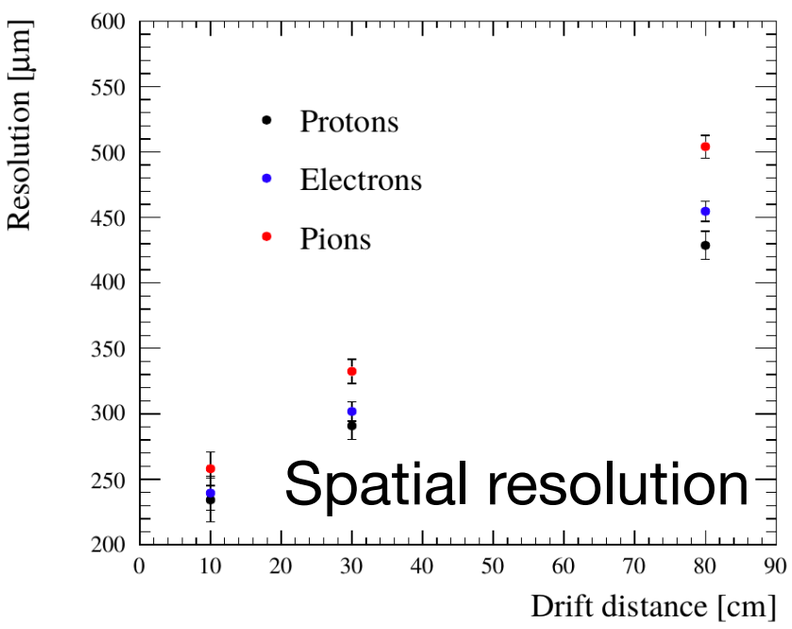

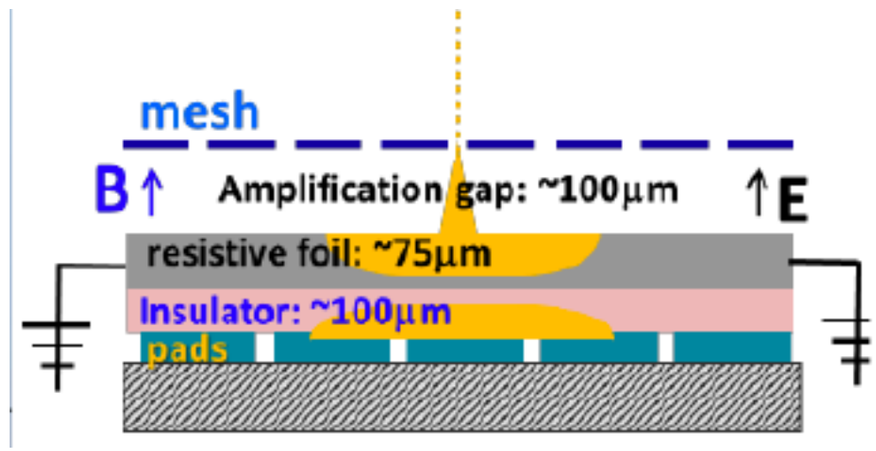

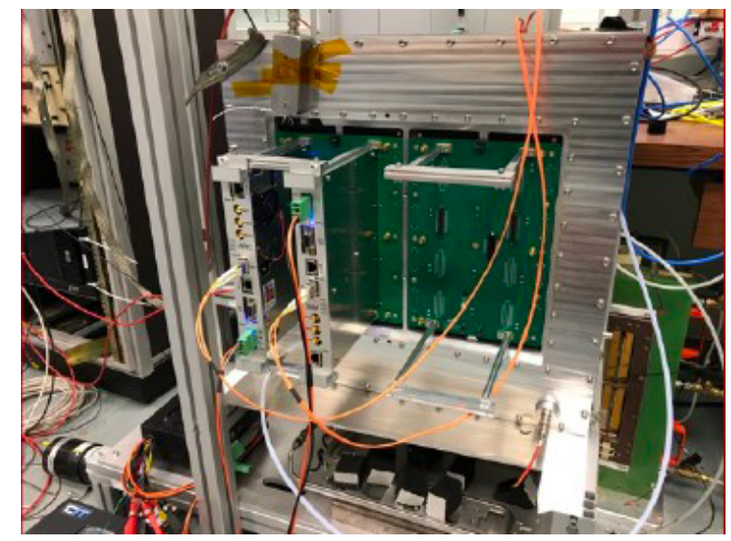

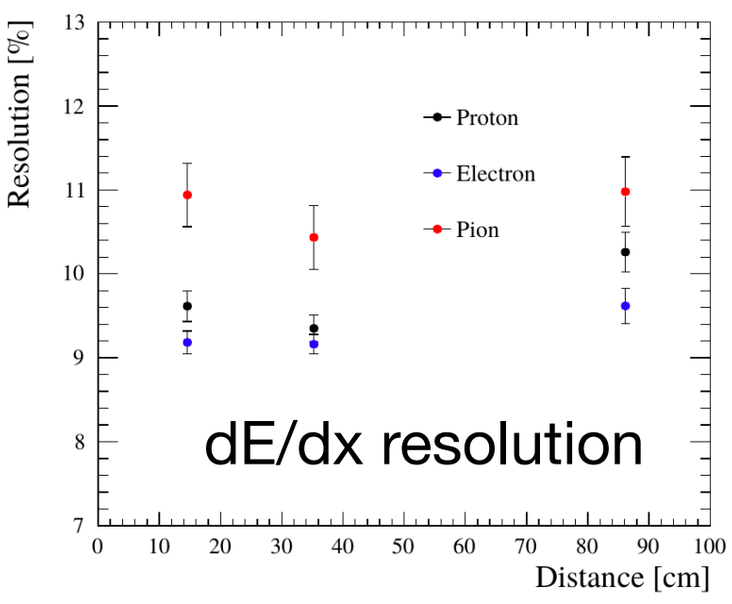

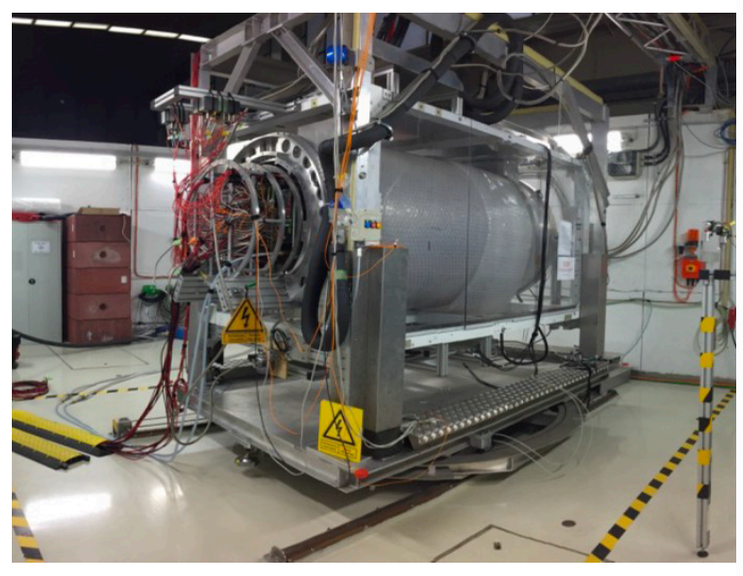

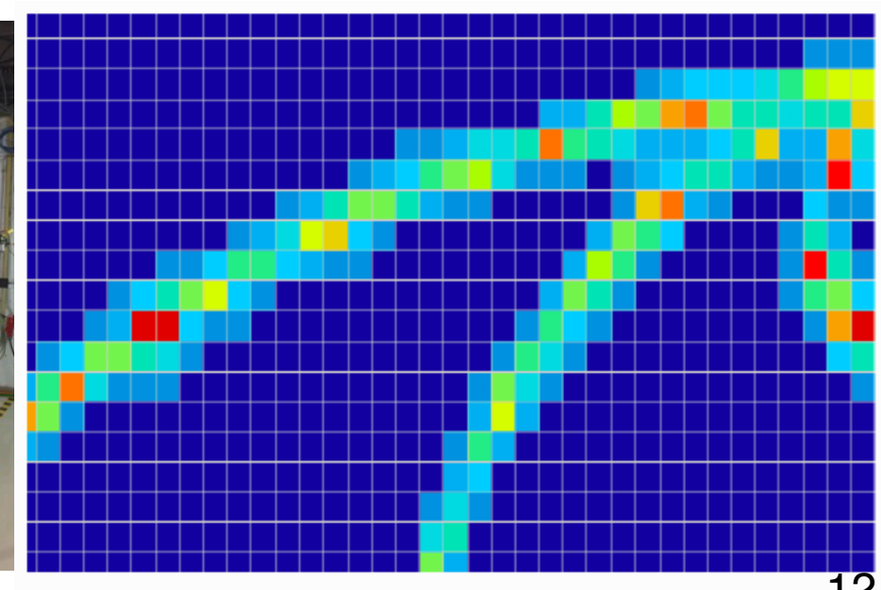

Option 3DST + Straw Tubes

- Possible STT configurations:
  - ✦ Straw Pure tracking in STT: remove most density & mass
  - ✦ Physics measurements in STT: multiple nuclear targets, increase density & mass

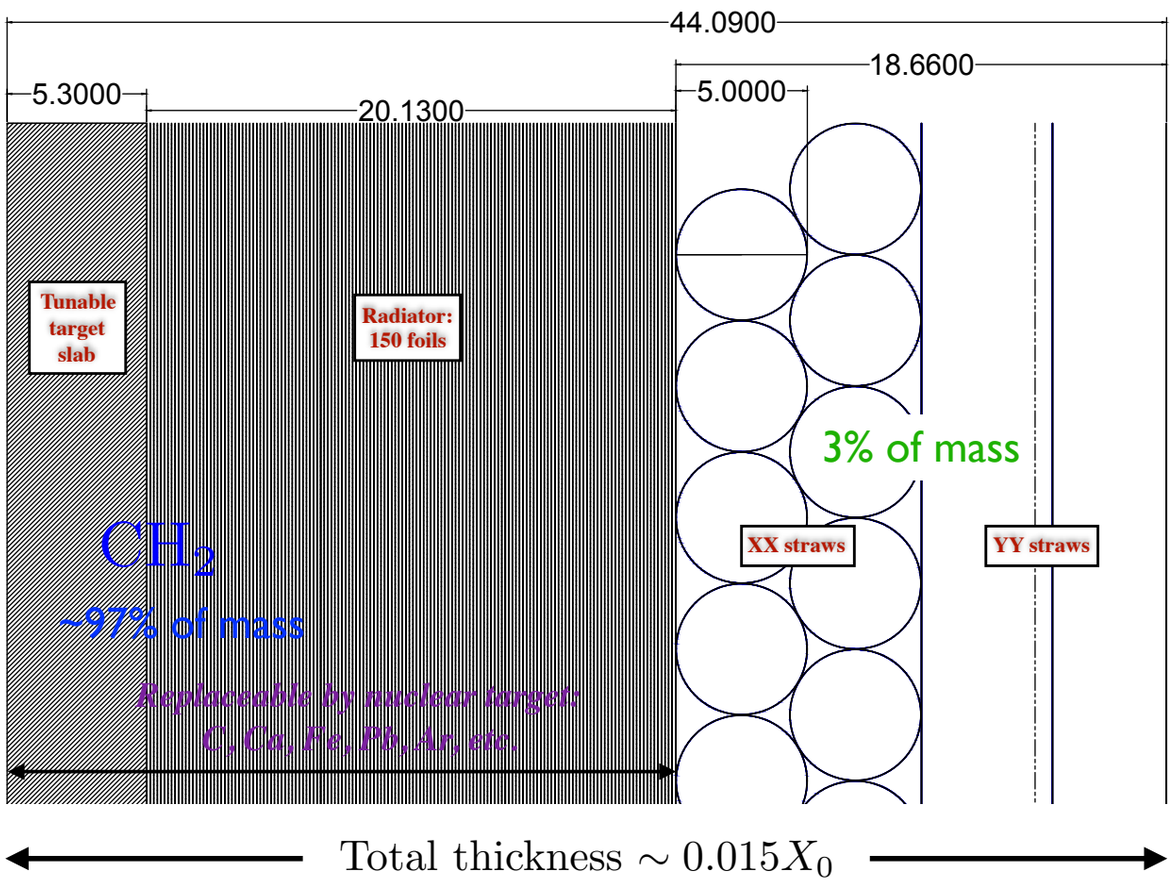

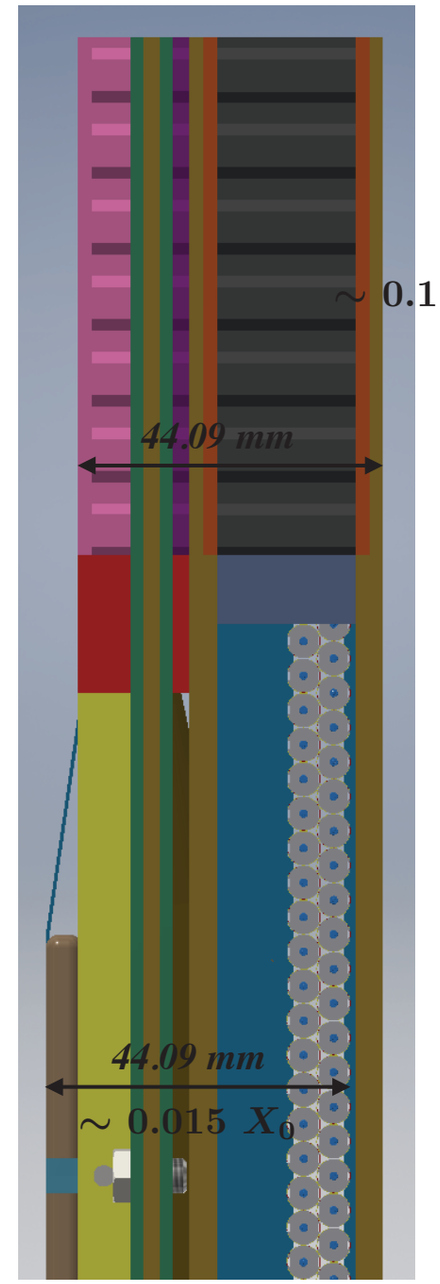

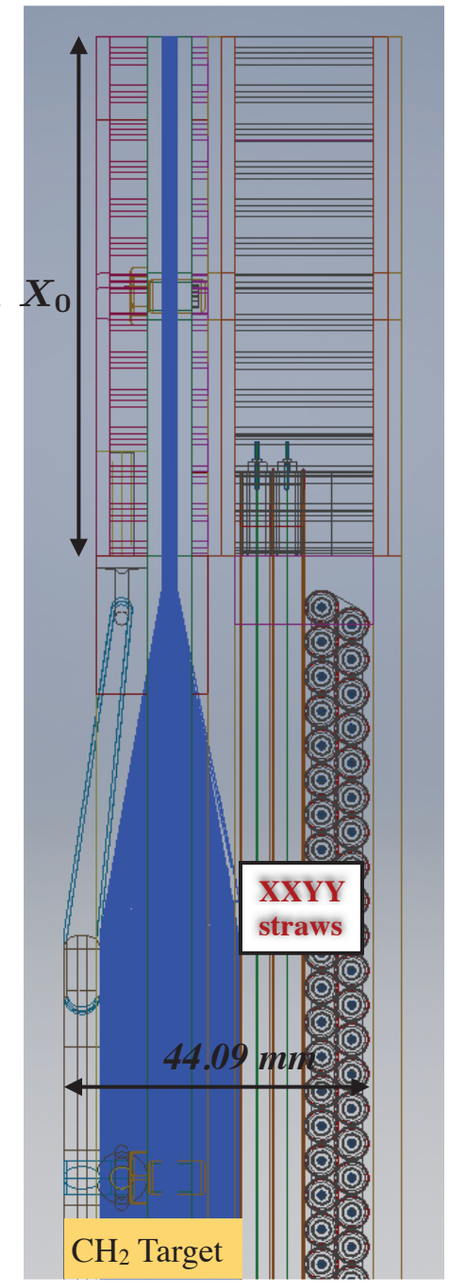

Detailed studies and optimization are ongoing to evaluate performance: find optimal compromise between target mass (statistics) & resolution

Short-term studies

- Beam spectrum monitoring
  - ✦ Inclusive CC + low nu
  - ✦ Repeat beam monitoring studies for both configurations
  - ✦ Single particle efficiency as a function of energy, angle, etc.
- Neutron background (purity and efficiency)
- Flux measurements
- Selection (efficiency and purity) of CCQE-like, CC resonsance, CC multipions interaction modes

Beam monitoring performances

- KLOE/3DST can detect issues in the beamline very efficiently by measuring the muon spectrum
- Compared with four 7-ton modules that measure the rate at 0,1,2,3 meters from the on-axis position (28 ton in total)

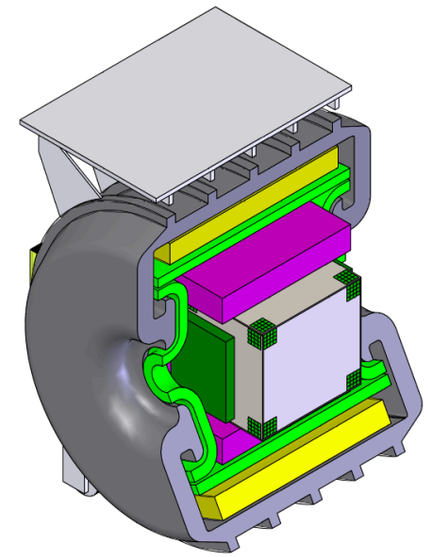

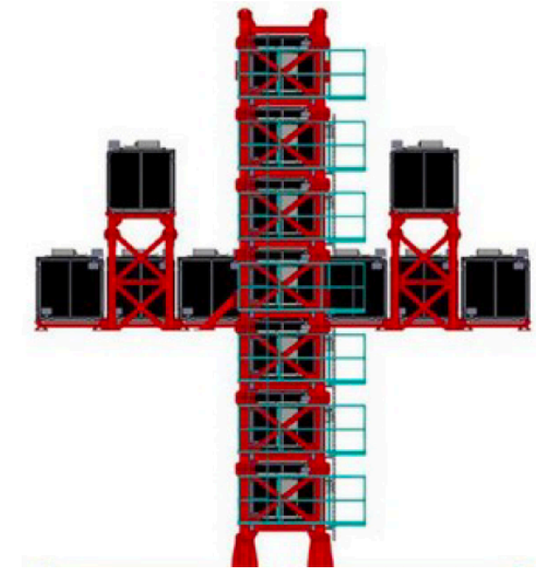

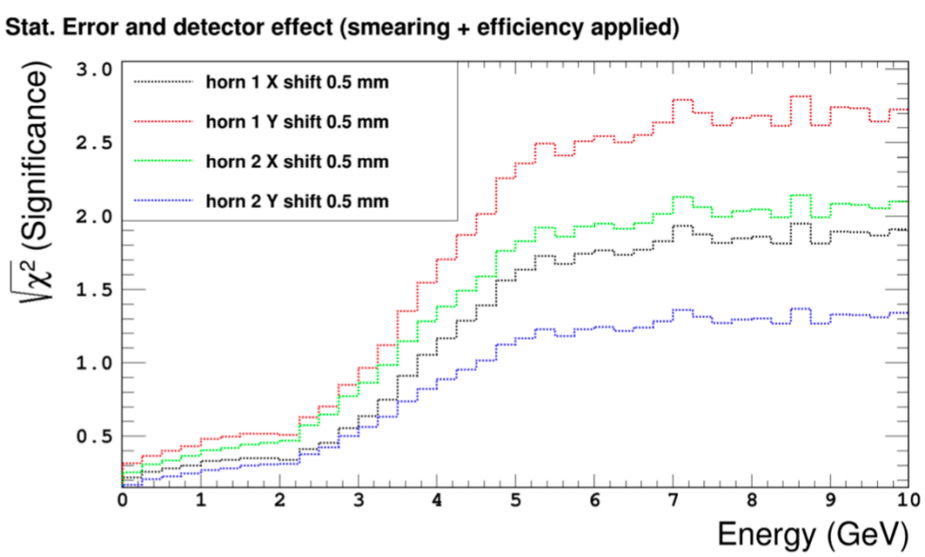

	Significance, $\sqrt{\chi^2}$	
Changed beam parameter	Rate-only monitor	3DST-S
proton target density	1.9	7.8
proton beam width	3.0	6.6
proton beam offset x	0.7	20.0
proton beam theta phi	0.2	12.5
horn 1 along x	1.9	8.8
horn 2 along x	0.7	12.8
horn 1 along y	0.2	9.9
horn 2 along y	0.4	6.3

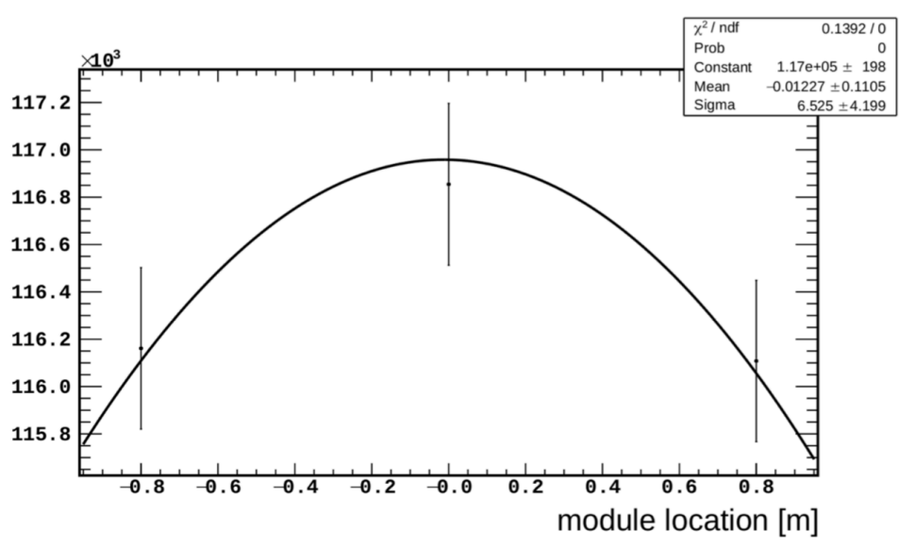

- Measuring the spectrum is much more powerful than the measuring the rate
- Using single 3DST module, ~11 cm uncertainty on the beam center can be achieved with 1 week data taking

Beam monitoring performances

- We were asked by the NDDG conveners to check the impact on beam profile monitoring performance if 3DST is slightly off the beam axis along Y (height): simulated 3DST at 3m, 1m, 0.4m and 0.3m off-axis positions

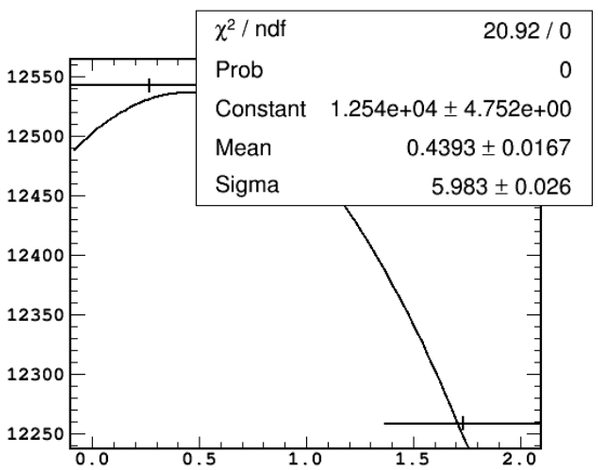

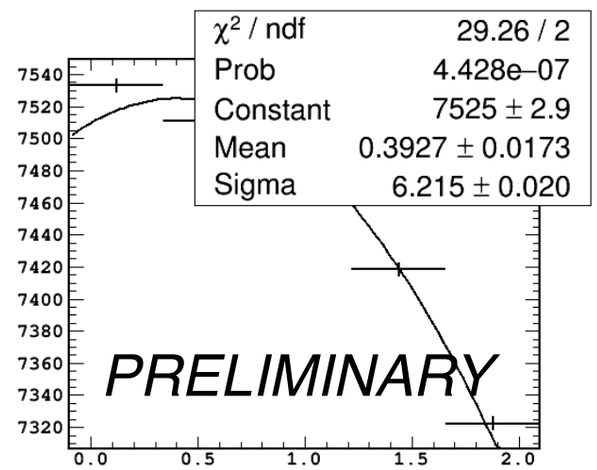

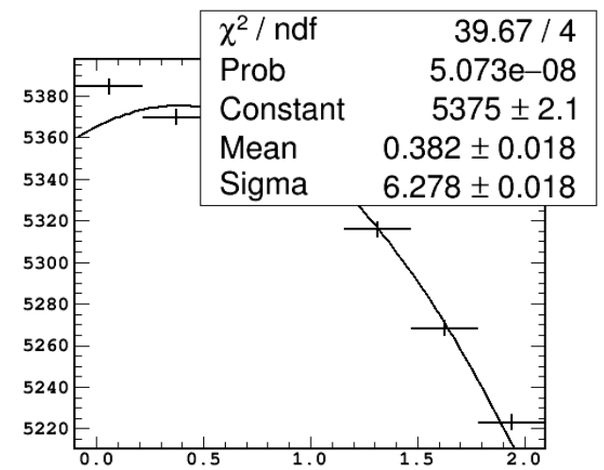

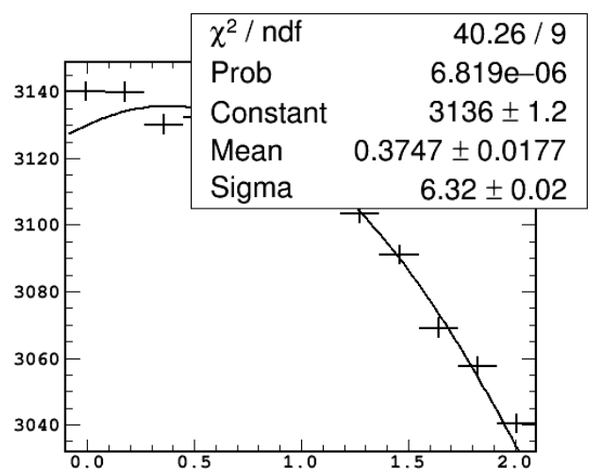

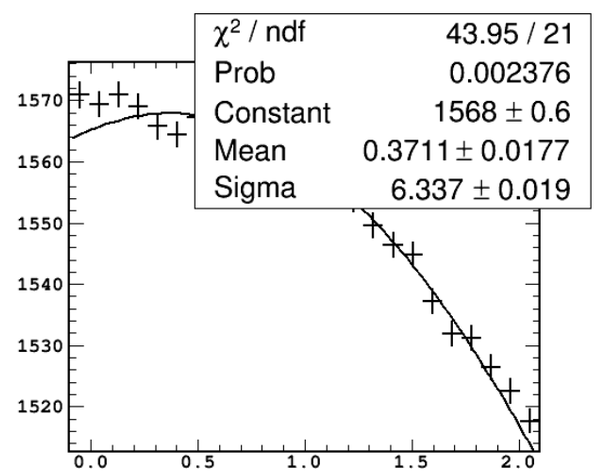

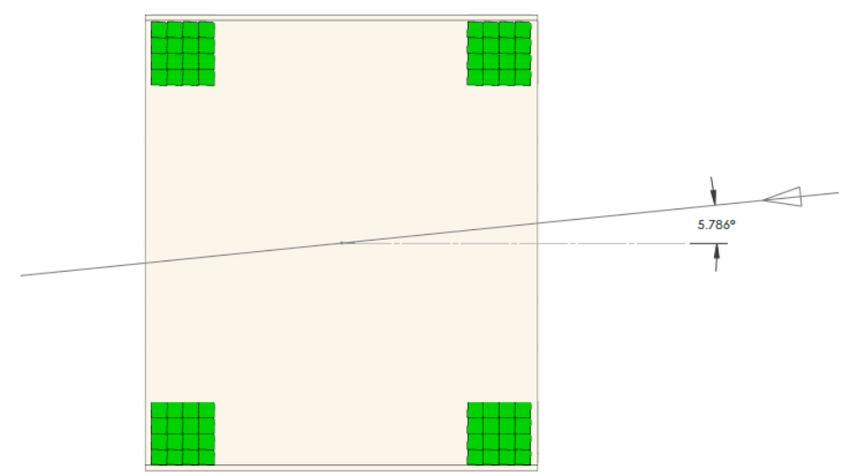

- For any of the configurations above the beam center Y position would be measured with a bias larger than 10cm
- The beam has to be in the center of 3DST to provide good beam monitoring

G4 geometry

- Work in progress to include the GEANT4 geometries of all the detector in the ND Software
- Optimization of the low-density trackers ongoing
- Full simulation of the ECAL performance, including

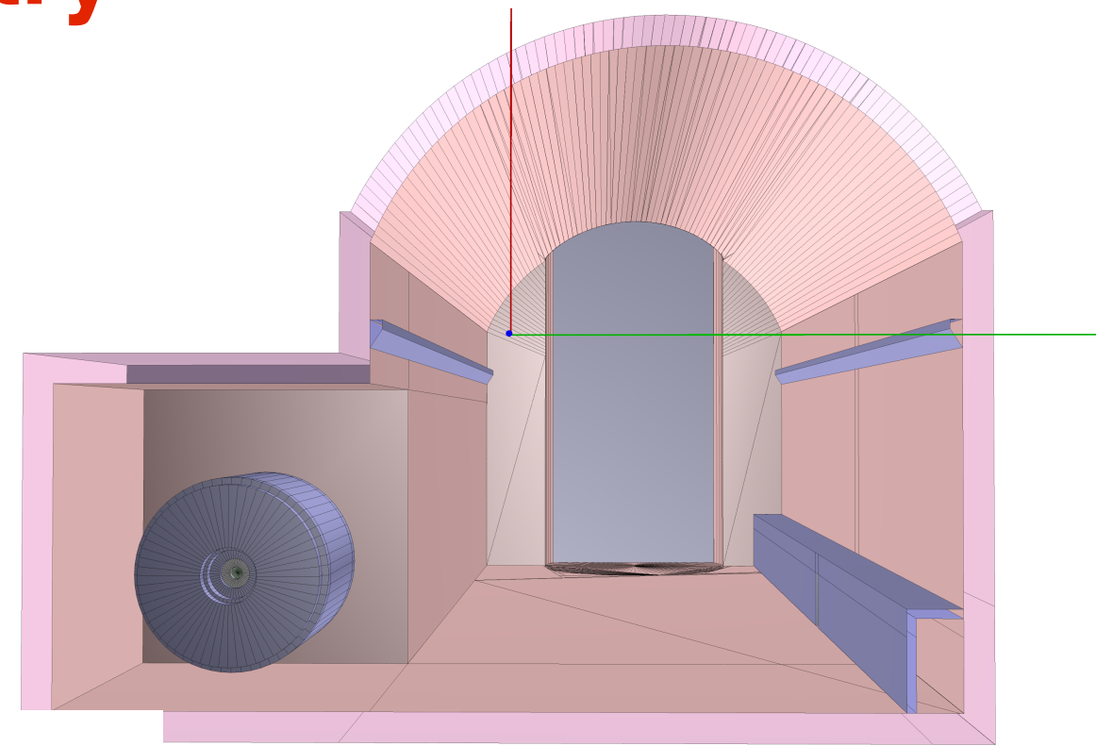

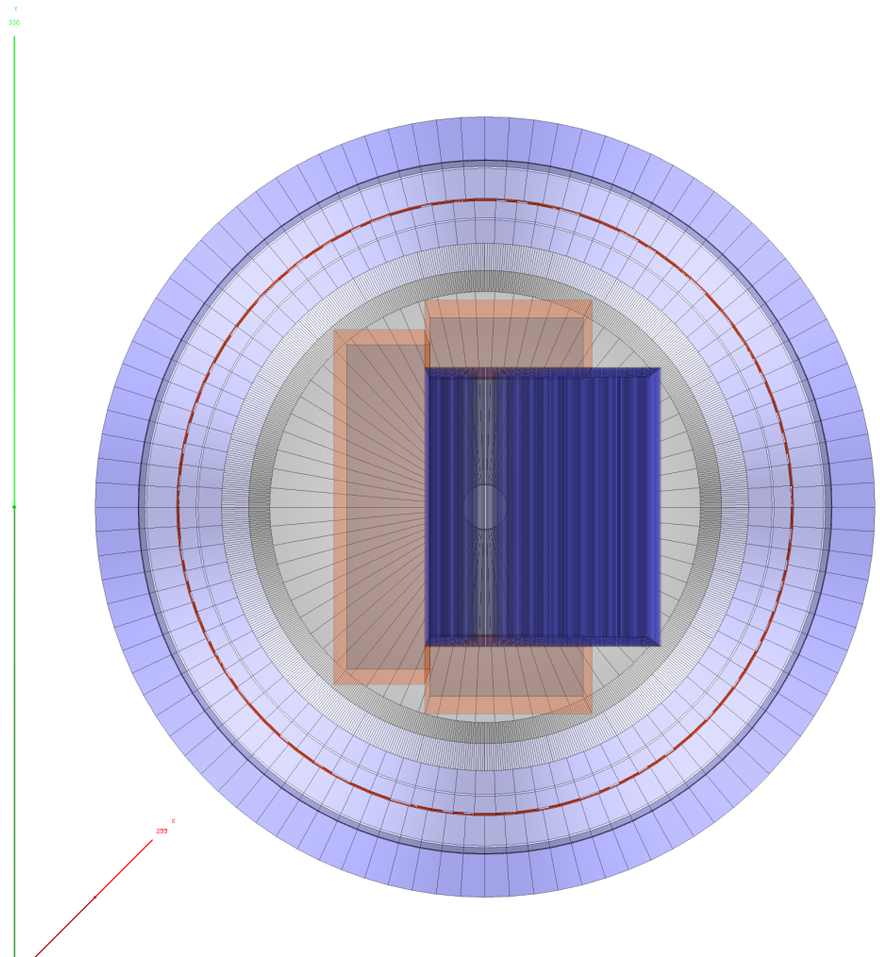

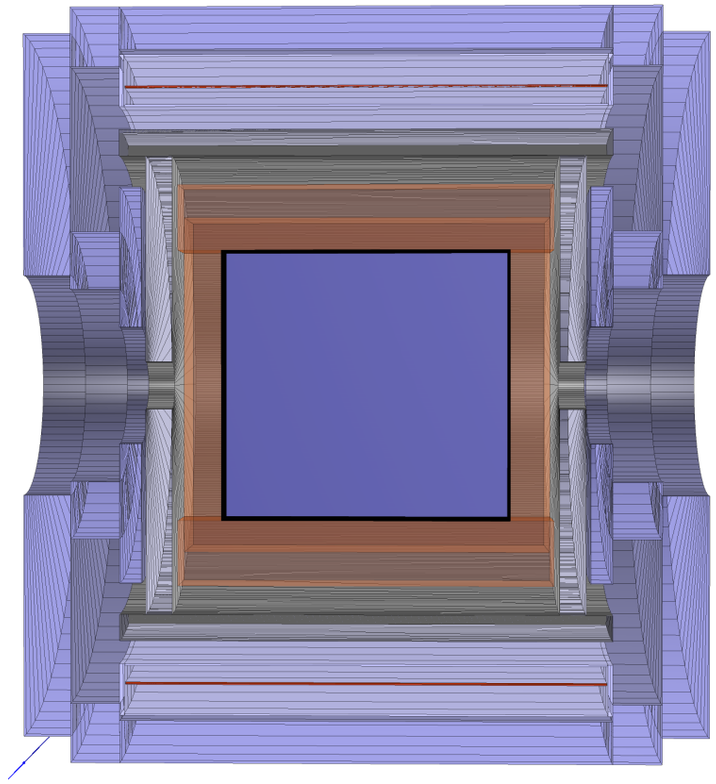

Preliminary neutron background studies

Signal

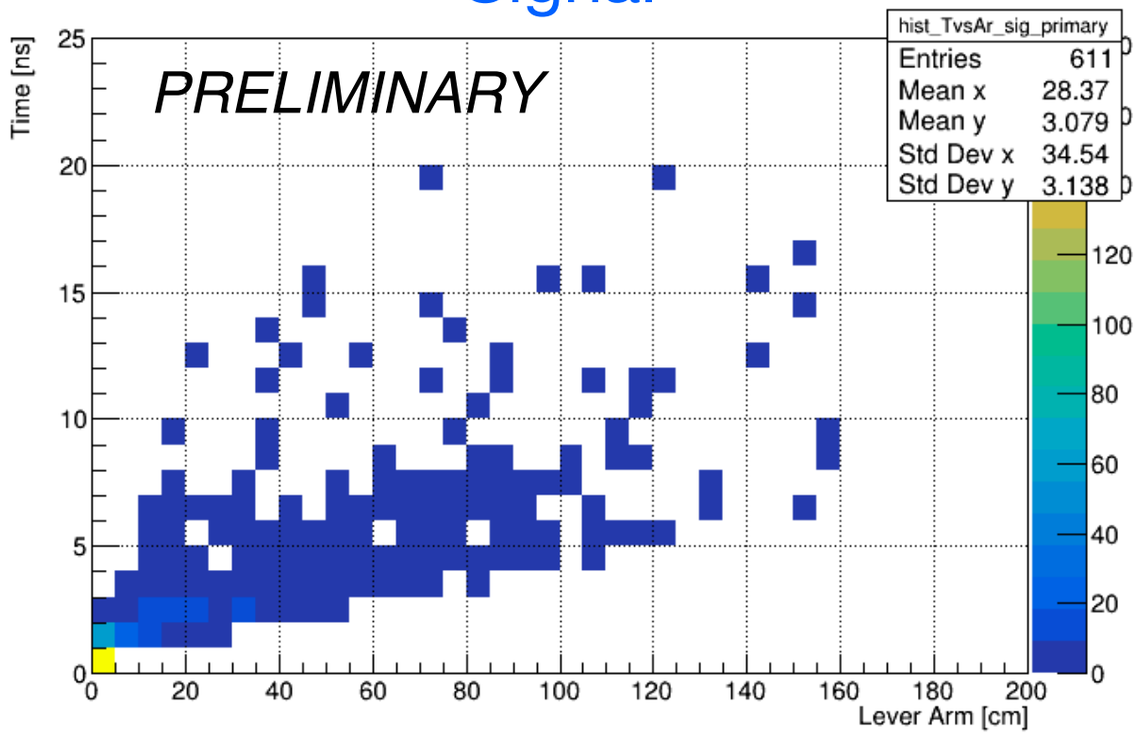

Outside Fiducial Volume

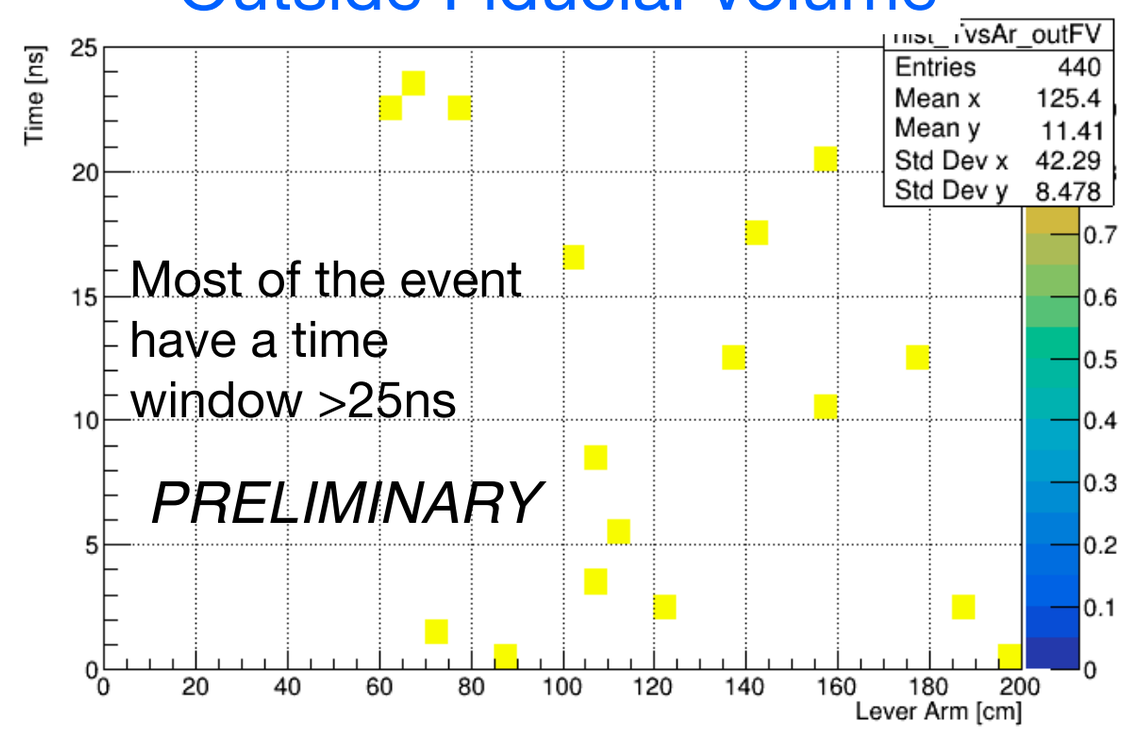

Secondary neutrons (no bkg rejection)

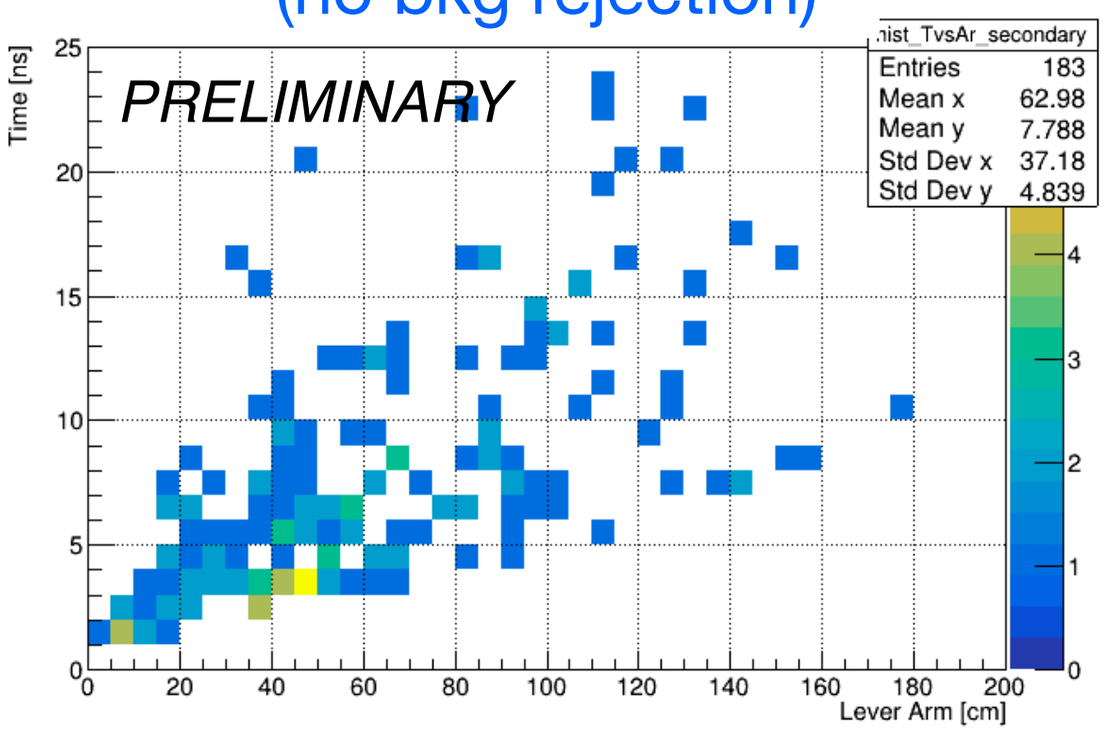

- Select first neutron induced hit in time
- Require energy deposited >0.5 MeV and inner 1x1x1 m^3 fiducial volume (FV)
- Bkg from neutrons from outside the FV is very small
- First look at secondary neutrons (re-interactions of primary pions, neutrons or protons in the detector)
  - ✦ We are studying the rejection cuts

Simulation studies with FLUKA

In FLUKA:

Integration of 3DST, surrounded by tracking devices (STT).

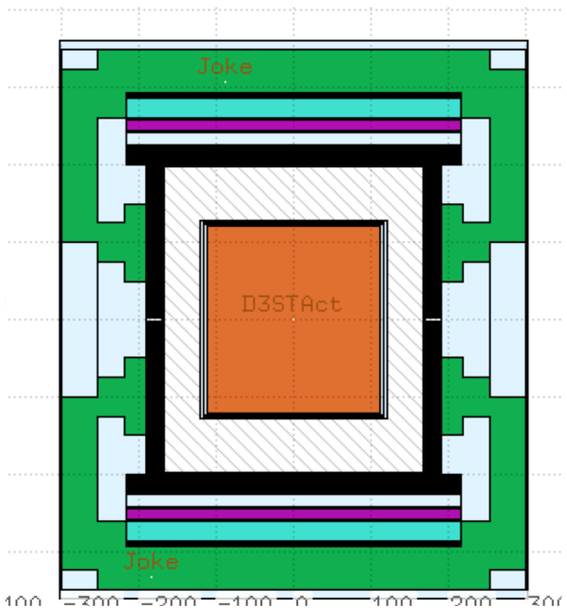

As seen by the beam. Black: emcalo, green: iron,, in between: coils and their cryo

Beam

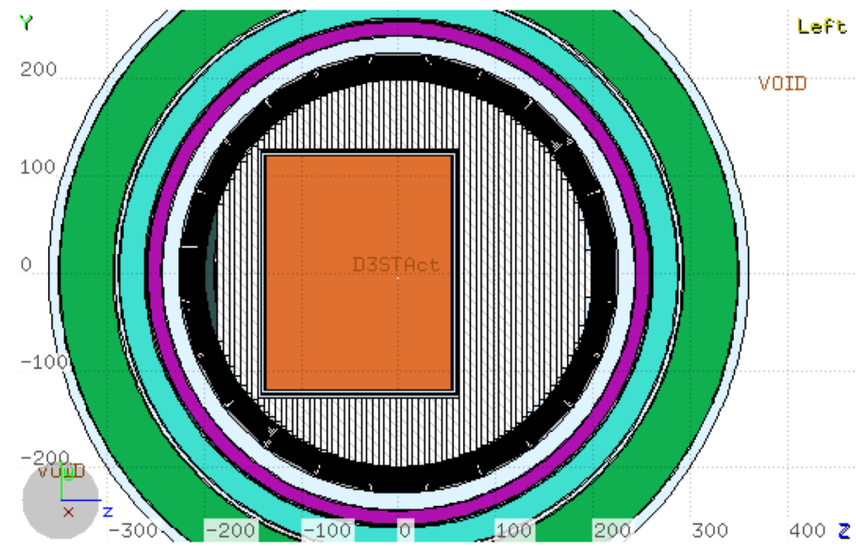

B: solenoid 0.6T

3DST: energy dep in 1cm^3 cubic cells. To be coupled with photoelectron yiels

Black: Edep in 3DST Red: tracker and Calo

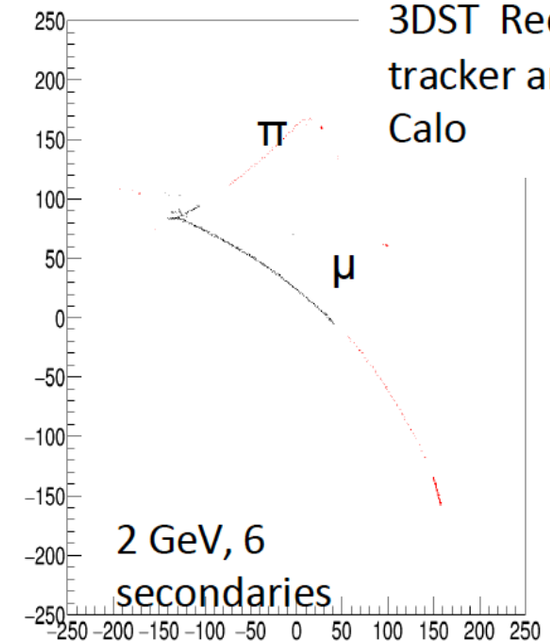

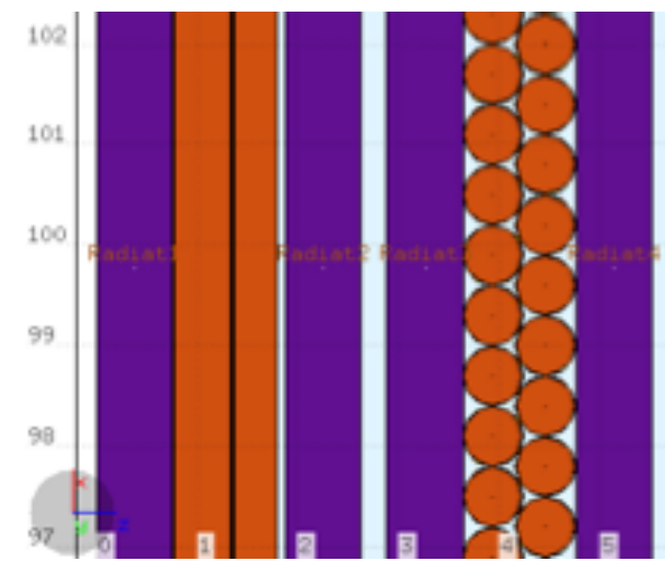

- Use FLUKA to cross-check and validate some of the studies
- Geometry fully implemented. Work in progress to validate the first results

Ongoing analyses

- GEANT4:
  - ✦ Neutron background studies in 3DST
  - ✦ Beam rate and spectrum monitoring studies
  - ✦ Detailed simulation of ECAL response
- FLUKA:
  - ✦ Muon neutrino CC events with vertex in 3DST (acceptance/ resolution)
  - ✦ Muon neutrino CC event with vertex in 3DST: response to neutrons
  - ✦ Muon neutrino CC events in Magnet+ECAL: background rejection

CDR content

a. Informations to be included in the CDR
    i. Updated chapter in hall/infrastructure
    ii. Near detector assembly
    iii. Update from all sub-groups (“New” group – KLOE+..)
    iv. New beam monitoring studies
        1. Importance of spectrum vs rate only
    v. Incremental study on LBL analysis input
b. What simulations can we realistically expect to accomplish?
    i. Detailed beam monitoring
    ii. What we can and cannot do with neutrons
    iii. Incorporation of additional samples into the LBL analysis
        1. Provide new samples
    iv. Nuclear theory, e.g. carbon measurements to validate models in argon (if enough time is left)

Conclusions

- The 3DST and KLOE working groups have merged and are now working together efficiently
- First kick-off meeting on the 9th of October
- We are having bi-weekly meetings on Friday 5pm CEST, 10am CST
- Contest to choose the detector system name has started
  - ✦ Any collaborator is welcome to suggest a name
  - ✦ contact Luca Stanco (luca.stanco@pd.infn.it)
- Once the name is chosen a new mailing list will be made for the working group

BACKUP

The 3DST event rate

- Event rate for 1.46×10^{21} POT / year (80 GeV beam, three horns, optimized)
- Applied a 10 cm out-of-FV cut:
  - Fiducial Volume = 2.2 x 2.2 x 1.8 m^3
  - Fiducial Mass = 8.7 tons (only 3DST)

Channel	ν mode	$\bar{\nu}$ mode
ν_μ CC inclusive	13.6×10^6	5.1×10^6
CCQE	2.9×10^6	1.6×10^6
CC π° inclusive	3.8×10^6	0.97×10^6
NC total	4.9×10^6	2.1×10^6
ν_μ-e^- scattering	1067	1008
ν_μ CC coherent	1.26×10^5	8.6×10^4
ν_μ CC low-ν (ν <250 MeV)	1.48×10^6	8.8×10^5
ν_e CC coherent	2.1×10^3	719
ν_e CC low-ν (ν <250 MeV)	2.1×10^4	4.7×10^3
ν_e CC inclusive	2.5×10^5	0.56×10^5

- The FV will have different definitions depending on the physics measurement
- Depending on the ECAL design, additional mass could be achieved for some physics channels

The KLOE model

By Bob Flight

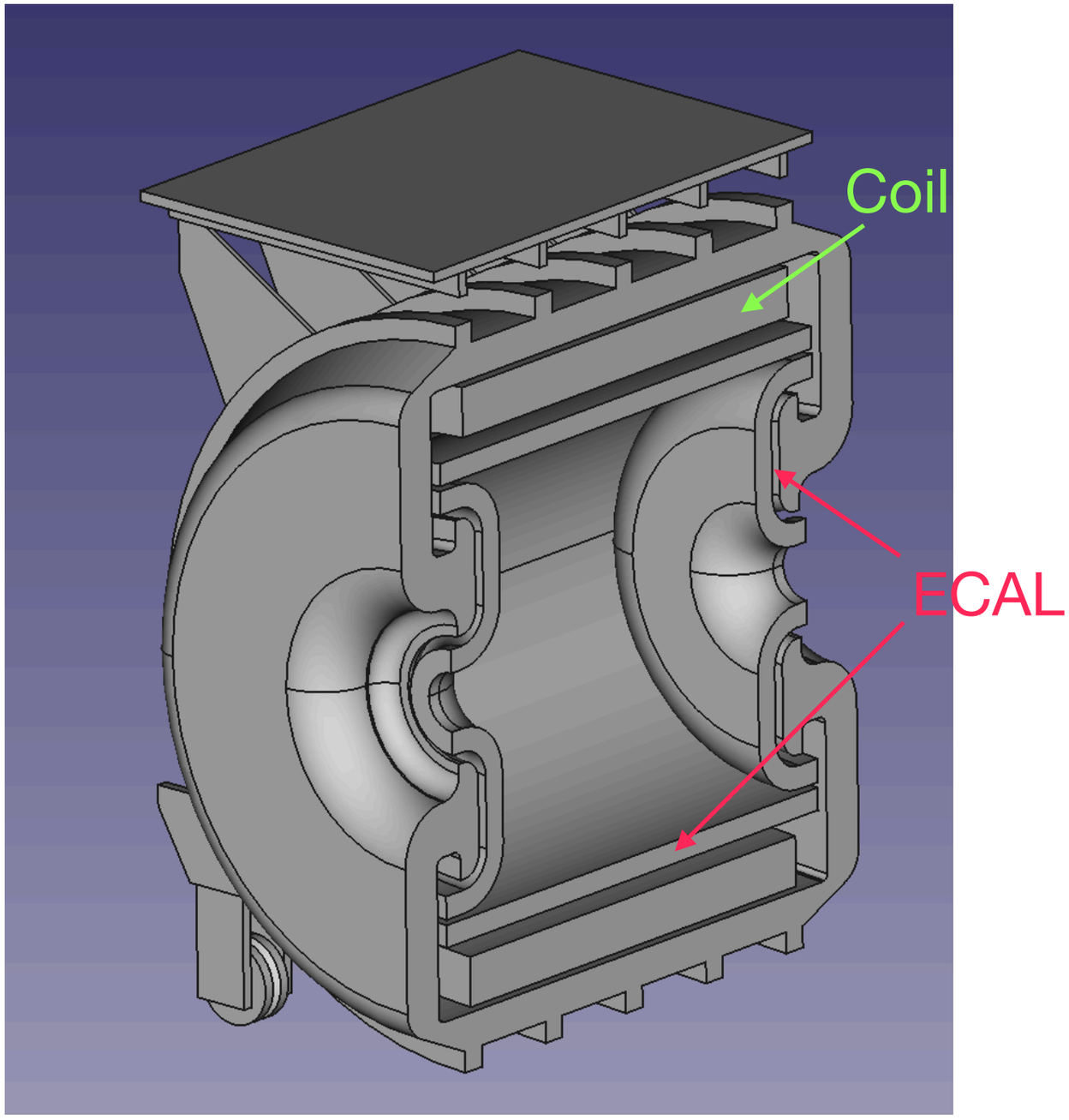

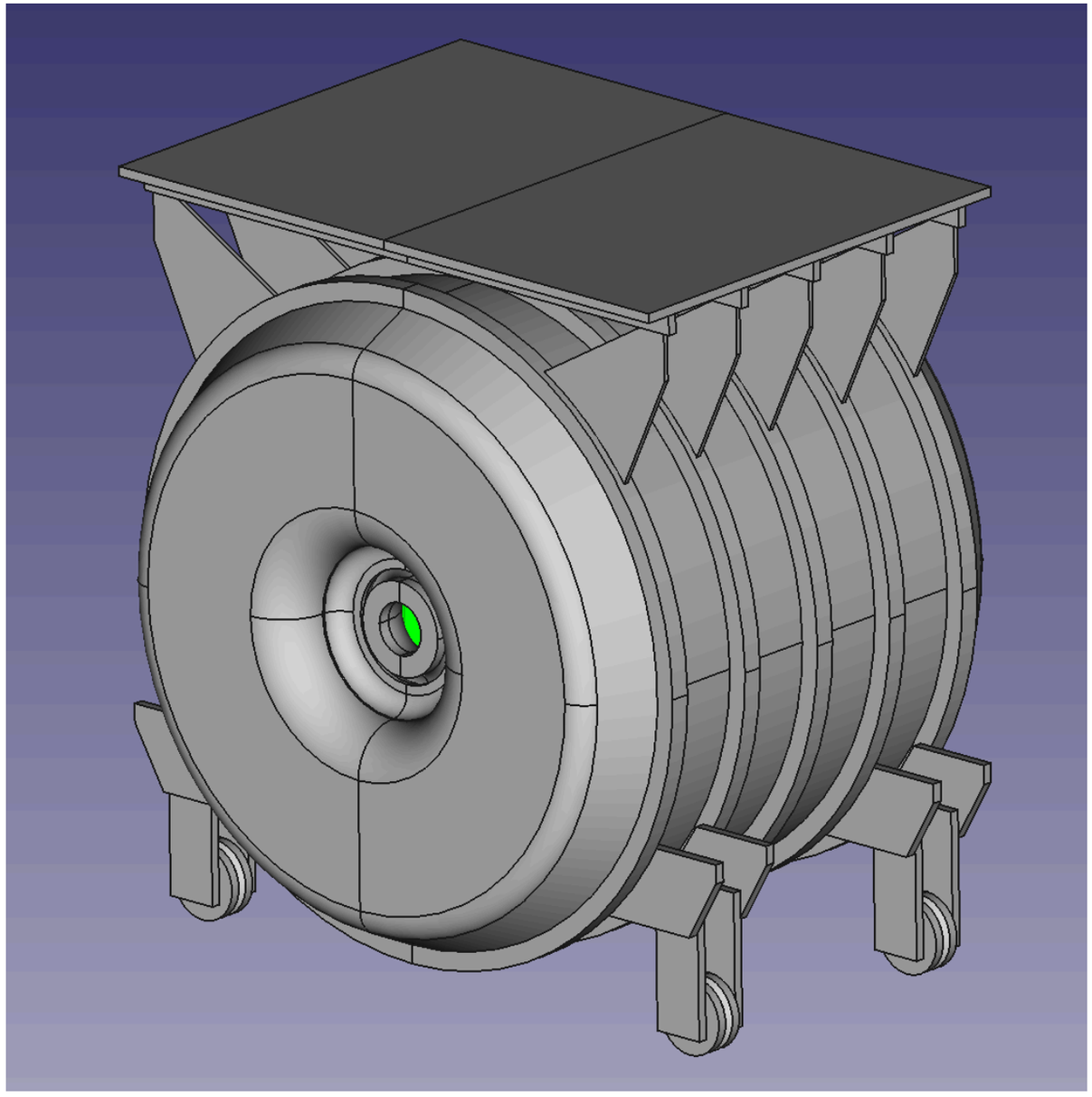

- Estimated the available space in the ECAL inner volume
- Update the dimensions of 3DST + Tracker to keep the same mass as in the original configuration and at the same time to fit the available space

Importance of beam monitoring with DUNE-PRISM

- DUNE ND conceptual baseline includes three main detector systems:
  - ✦ LAr and HP-TPC will move off-axis (range of ~30 m)
  - ✦ 3DST spectrometer will be the only on-axis detector
- DUNE-PRISM relies on a good knowledge of the flux
- Undetected problems in the beamline would result in a wrong ND—>FD extrapolation
- Example from the NUMI beam: MINOS ND found problems by looking at the time-dependent variation of the neutrino reconstructed energy spectrum, while NOvA (off-axis) didn't observe significative changes

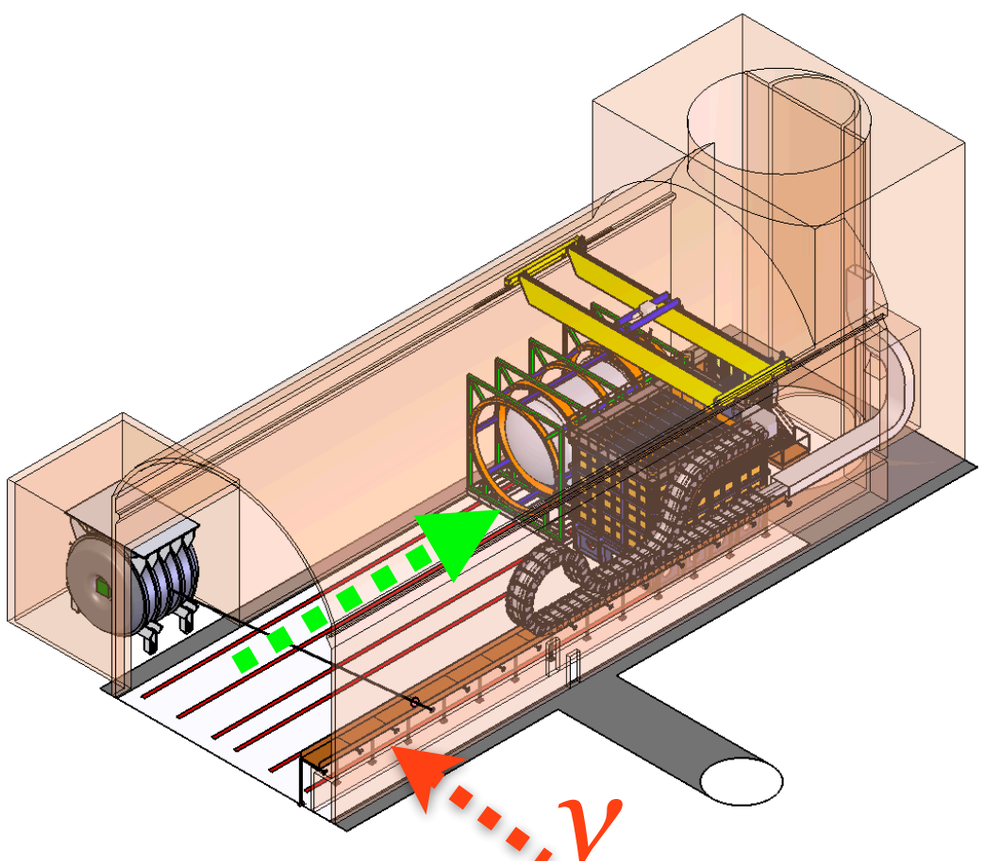

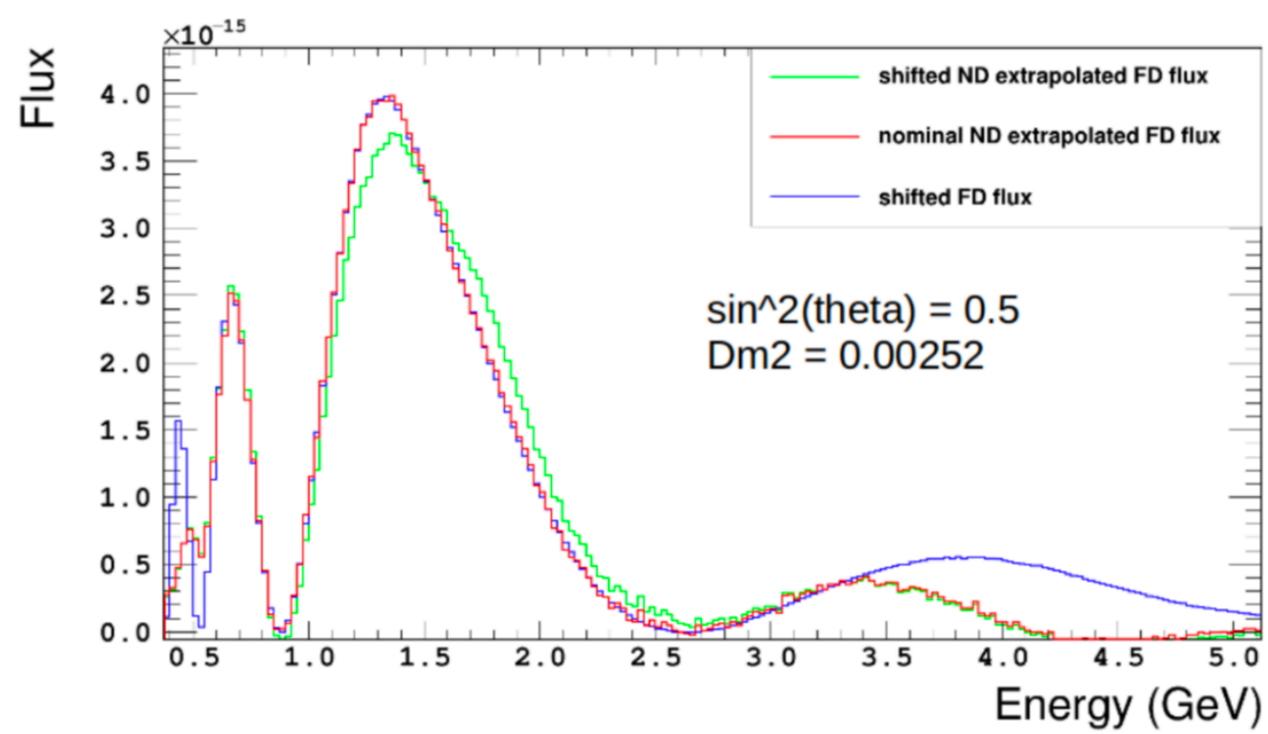

Simulation studies with FLUKA

Simulations

- Two parallel streams
- GEANT4 + GENIE + dunendggd
- FLUKA (with internal generator) + ROOT
- Same neutrino fluxes from http://home.fnal.gov/ ljf26/DUNEFluxes/
- Same 3DST dimensions/materials (from Davide)
- Same tracker (STT) configuration (new one under implementa
- In FLUKA: detailed EM Calo geometry+readout

Plots: em-calo hits (black) and readout cell centres (yellow) (integrated over many events)

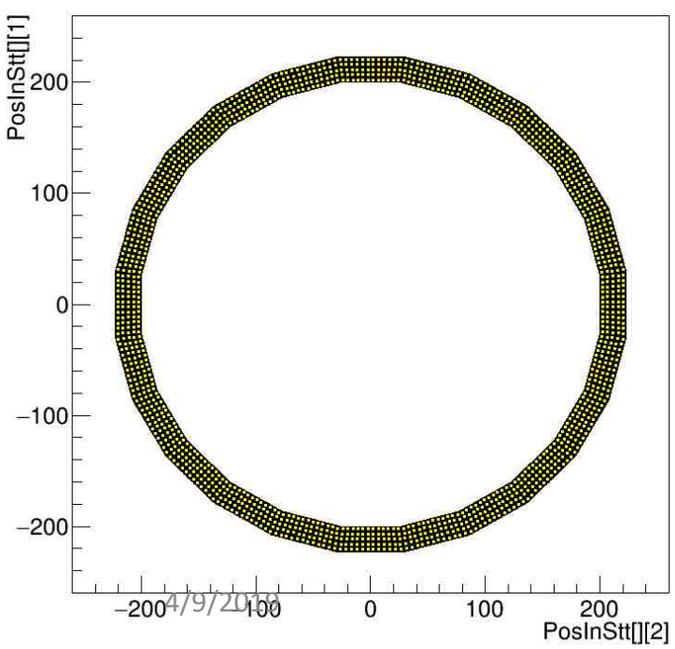

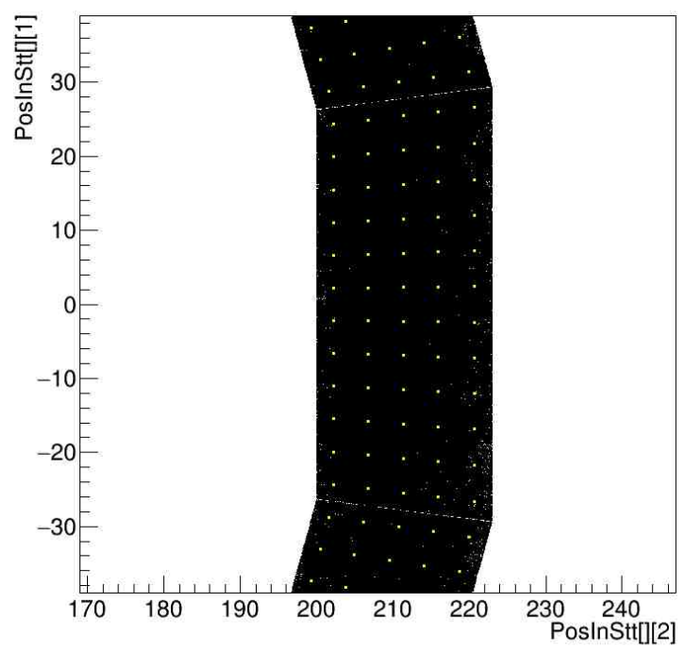

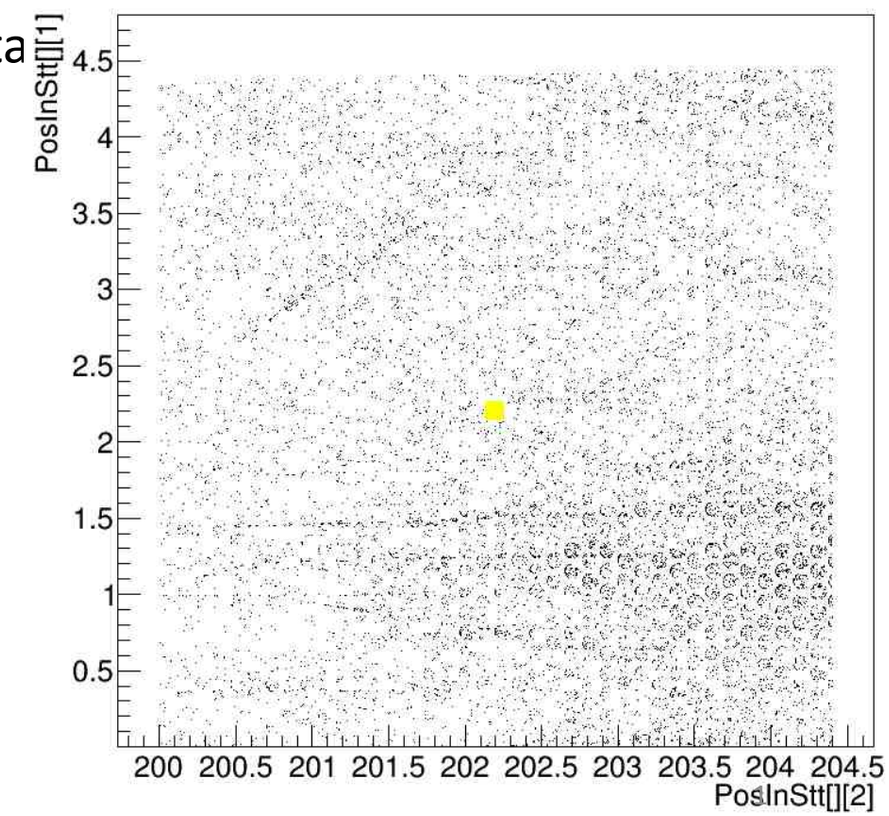

- FLUKA is a parallel analysis to cross-