MPD magnet reference design

MPD

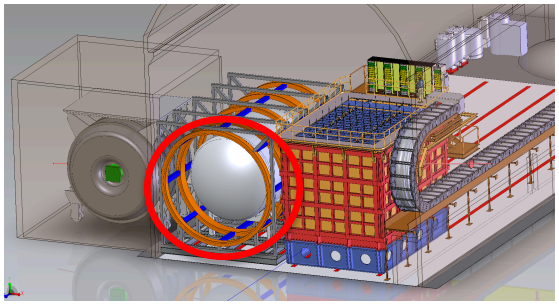

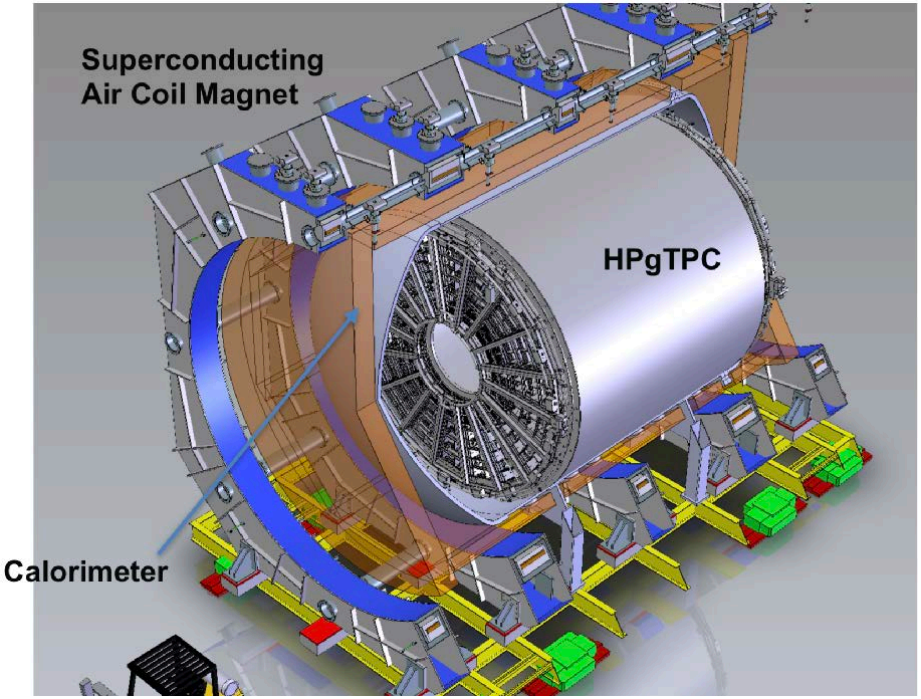

- High pressure (10bar) gas TPC + ECAL inside SC magnet + μ tag (outside)
- Magnet reference design has a clear bore (7m) that allows the ECAL to be inside the magnet mounted on the pressure vessel for the HPgTPC.

MPD Magnet Reference Design: Superconducting 3-coil Helmholtz with 2 superconducting bucking coils

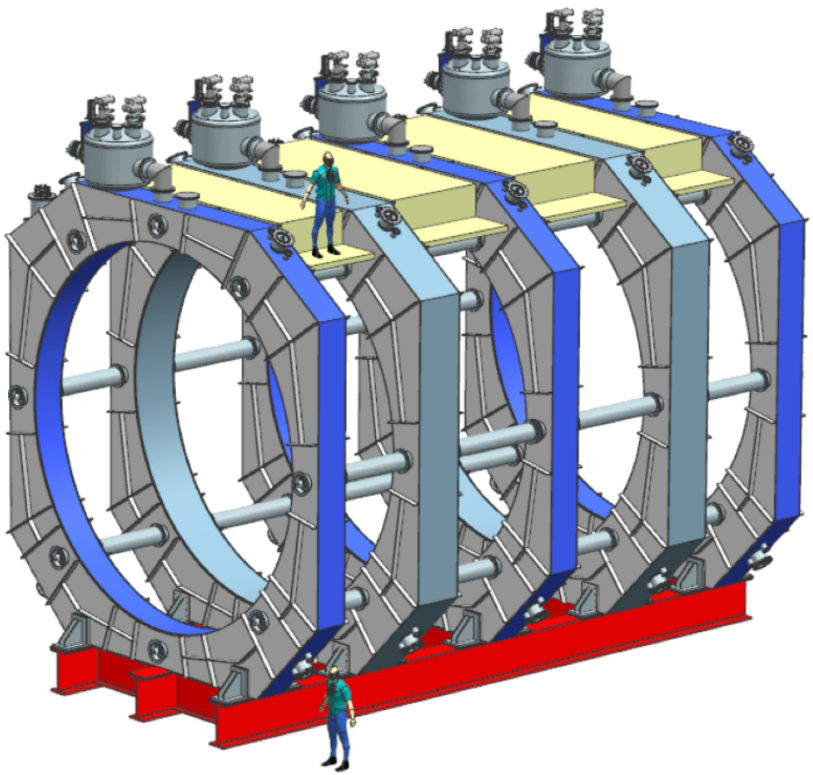

Magnet design concept

Reference design:

- All cryostats have the same inner radius (3.5m)
  - Permits ECAL to be inside
- Side coils at 2.5 m, shielding coils placed at 5 m from the magnet center in Z.
  - Center and shielding coils are identical.
- Central field = 0.5T
- Overarching requirements
  - Large acceptance for particles leaving LAr
  - Present minimal mass
- Field uniformity: ± 15%
- Sizeable stray field

Cryostat detail

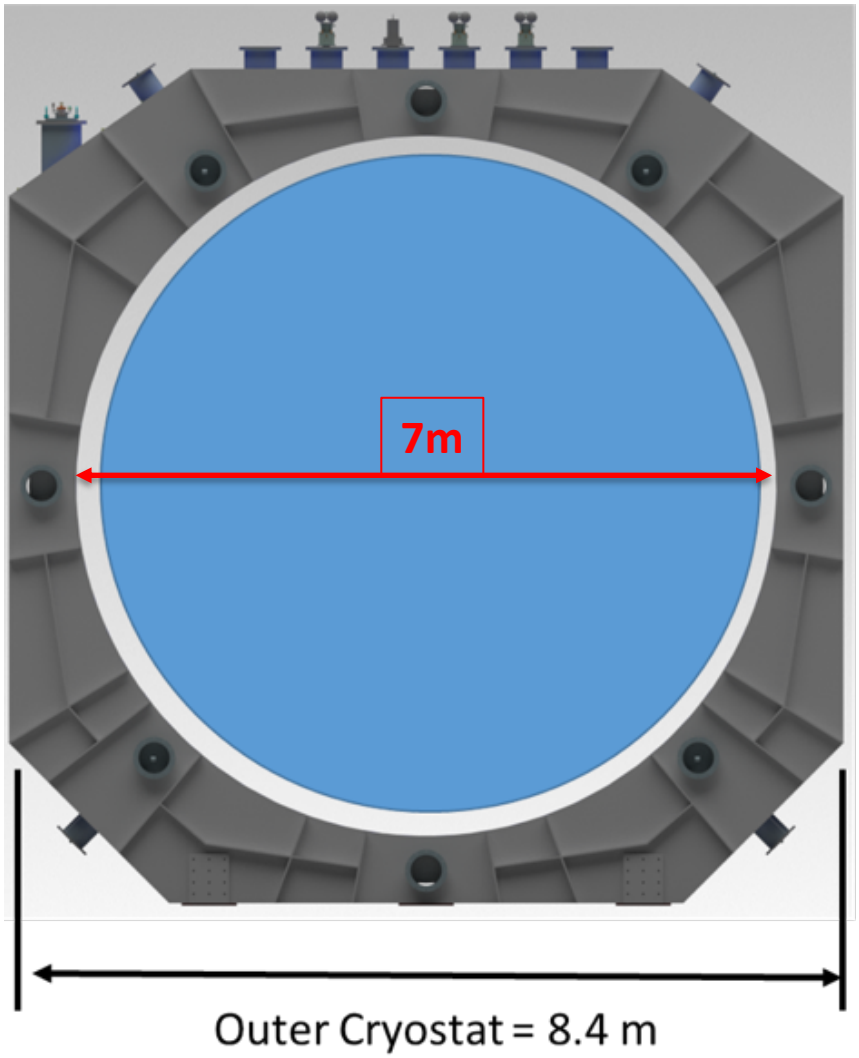

In the hall

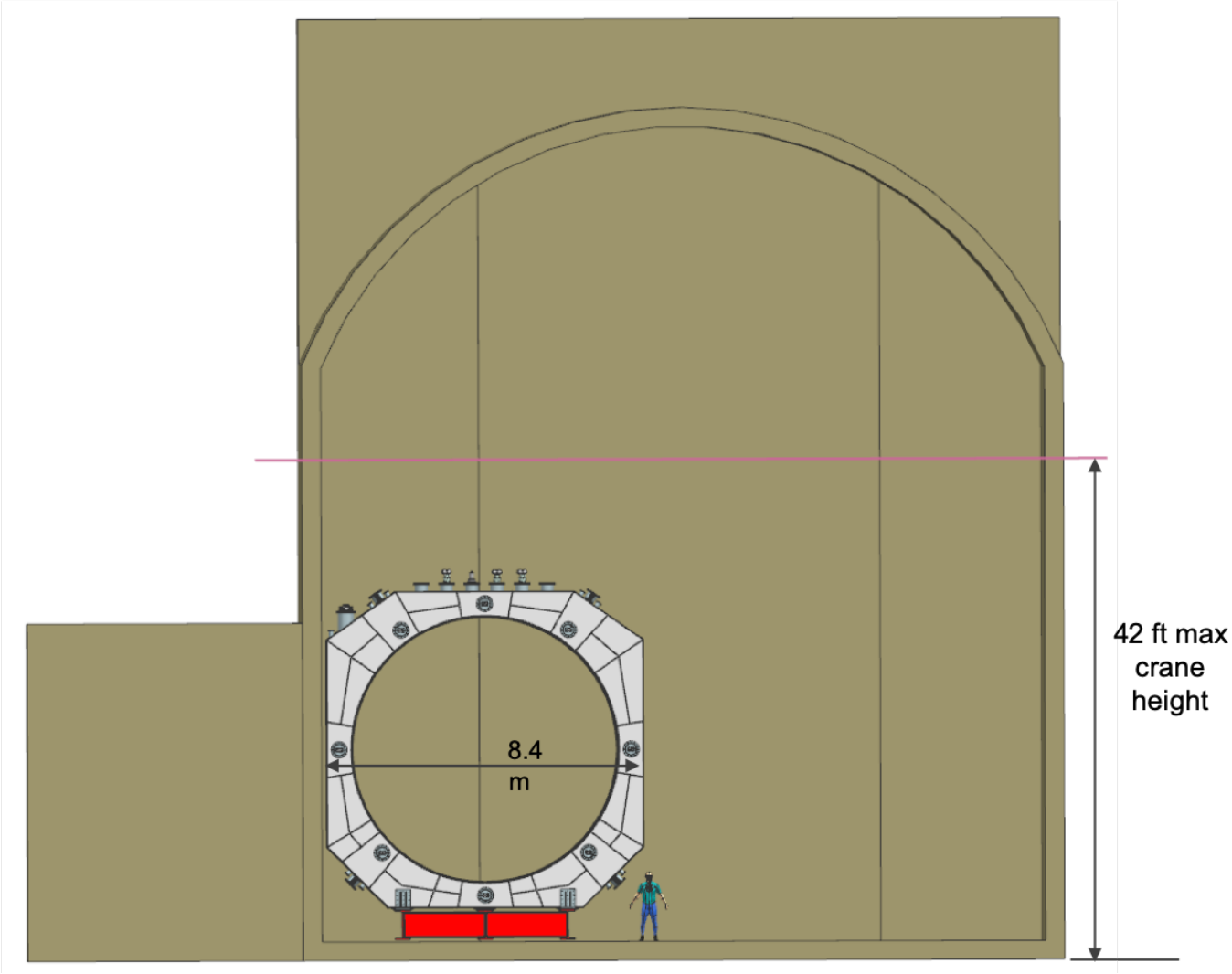

Reference: Coil Layout and Nominal Magnetic Loads

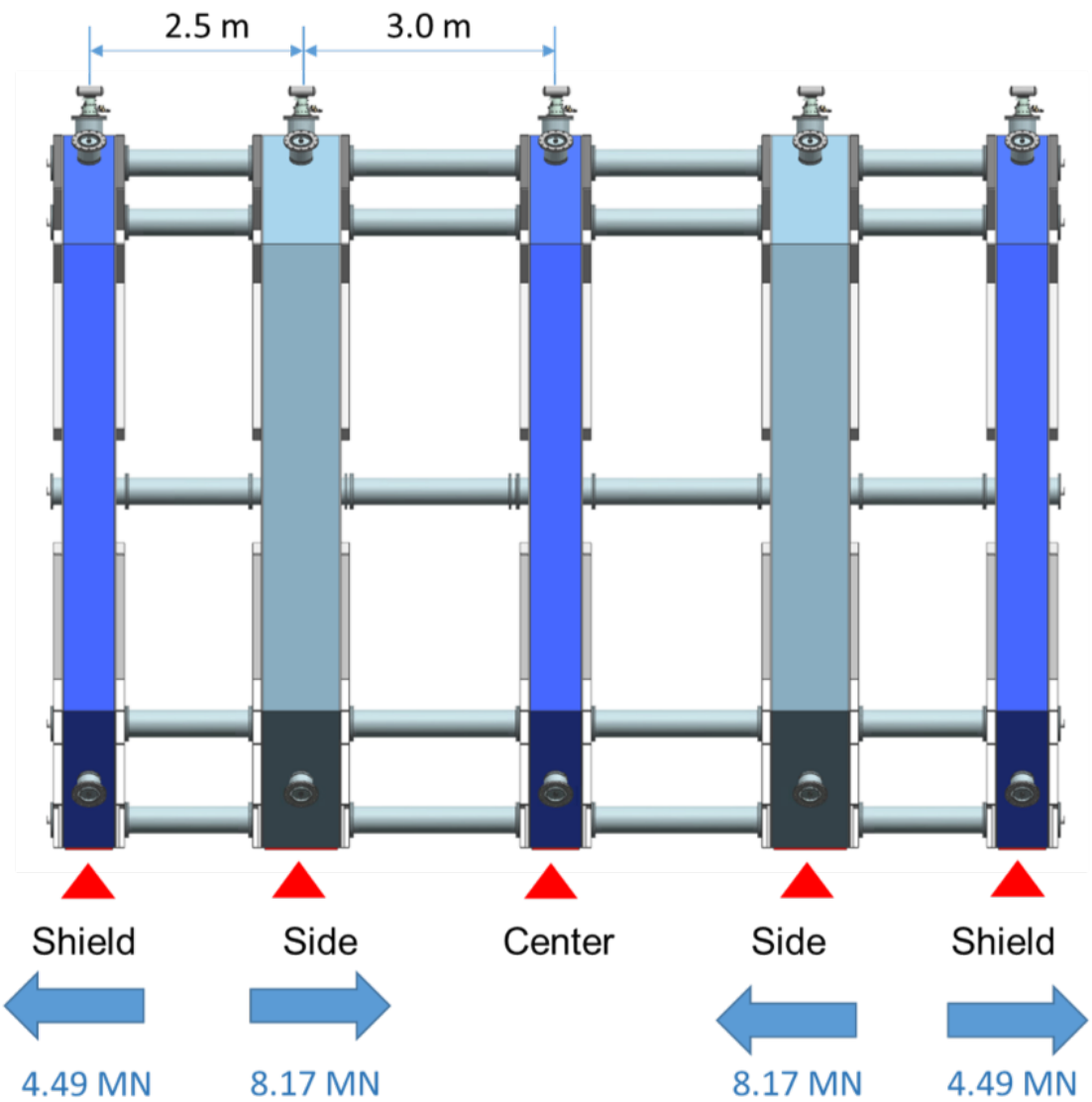

Coil support longitudinal: detail

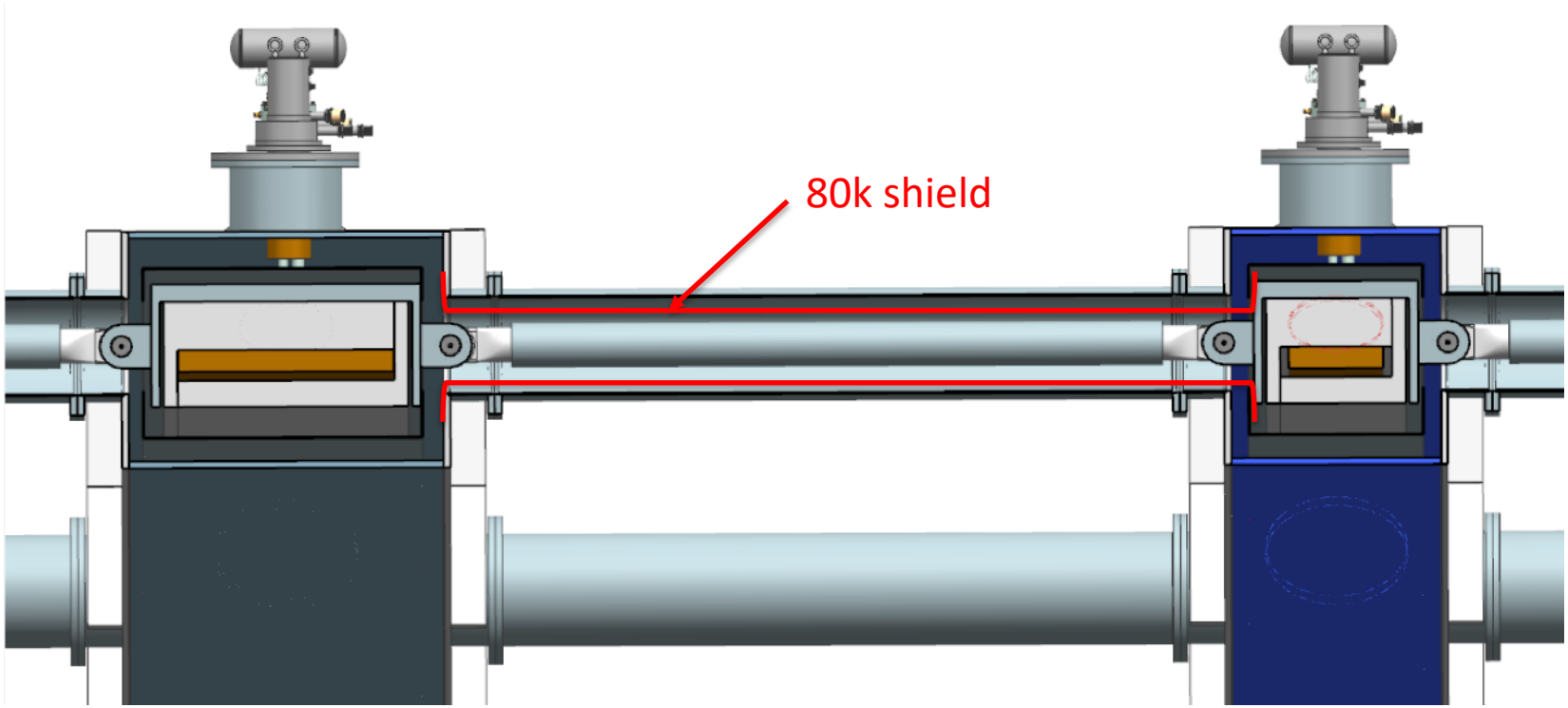

Support rods are kept cold at 4k to minimize the heat loss.

Coil support transverse: detail

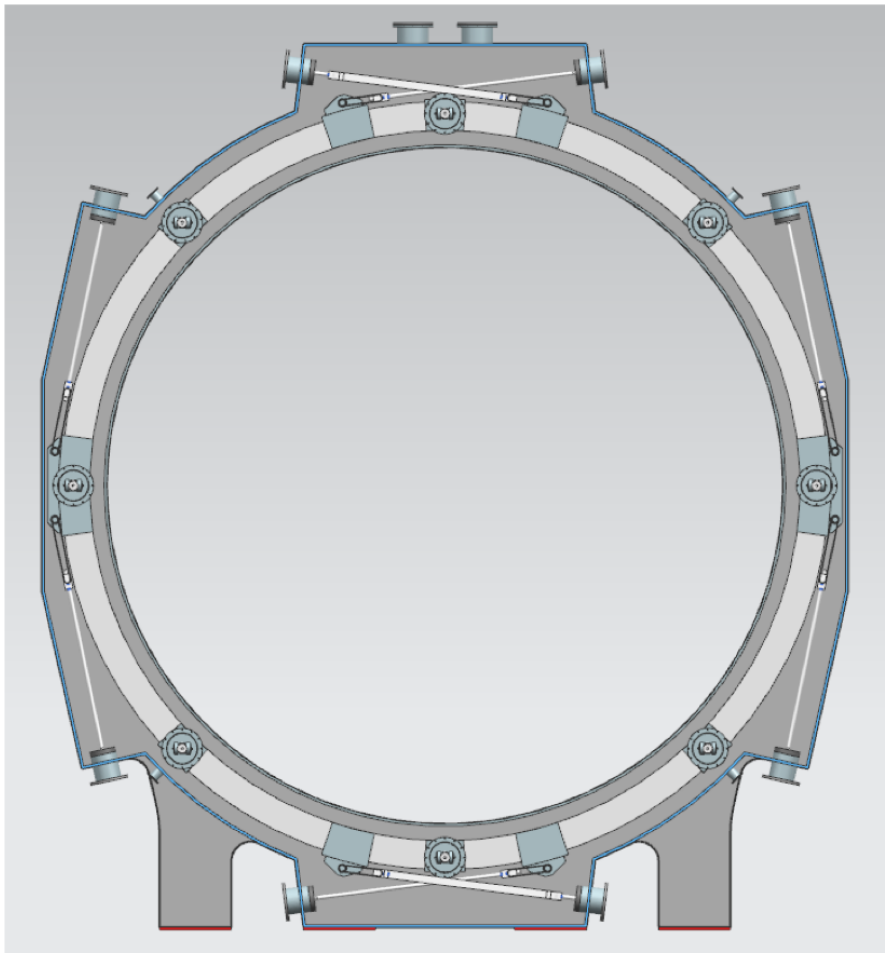

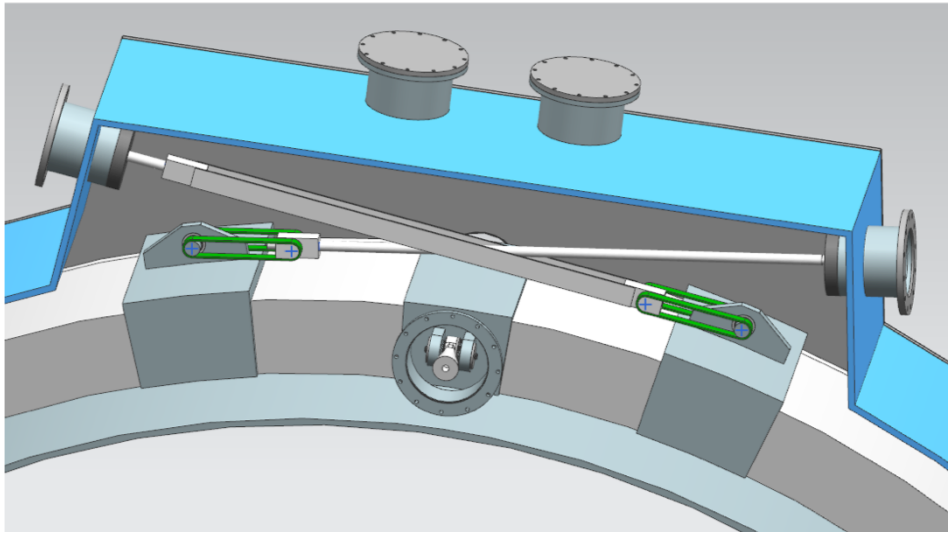

Very-low heat load design

Ref. Design: Uniformity & stray field

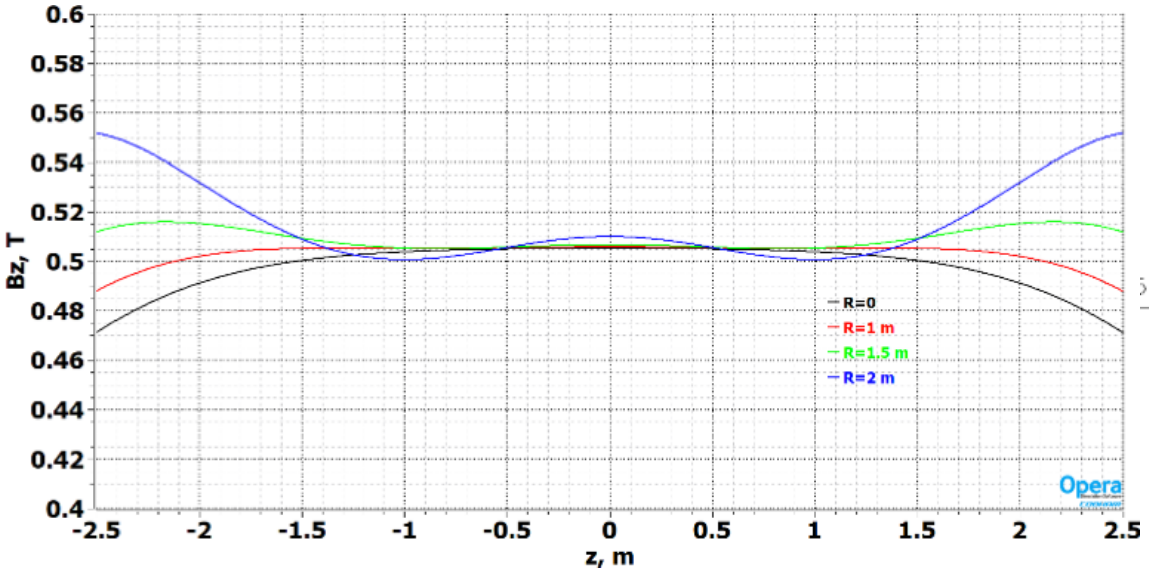

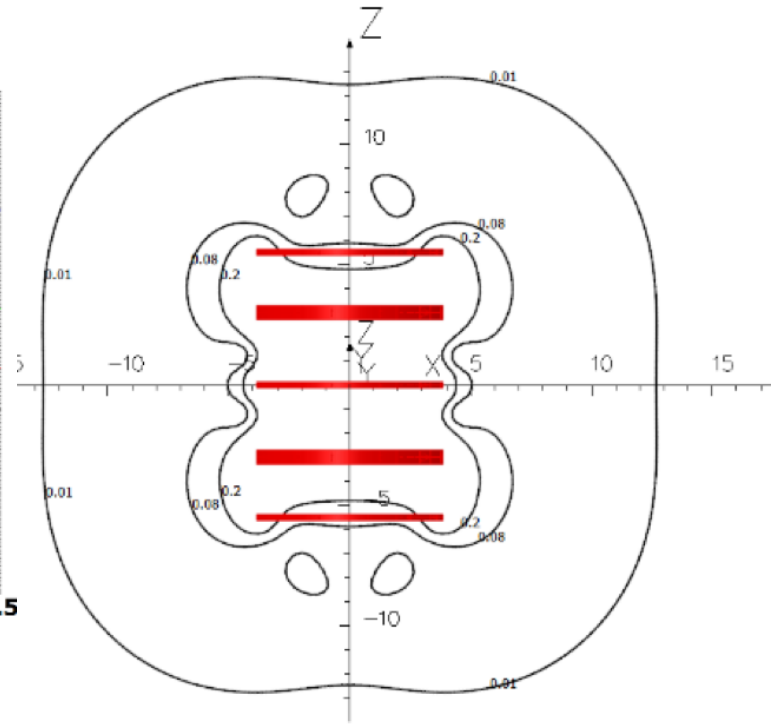

Interaction with KLOE steel

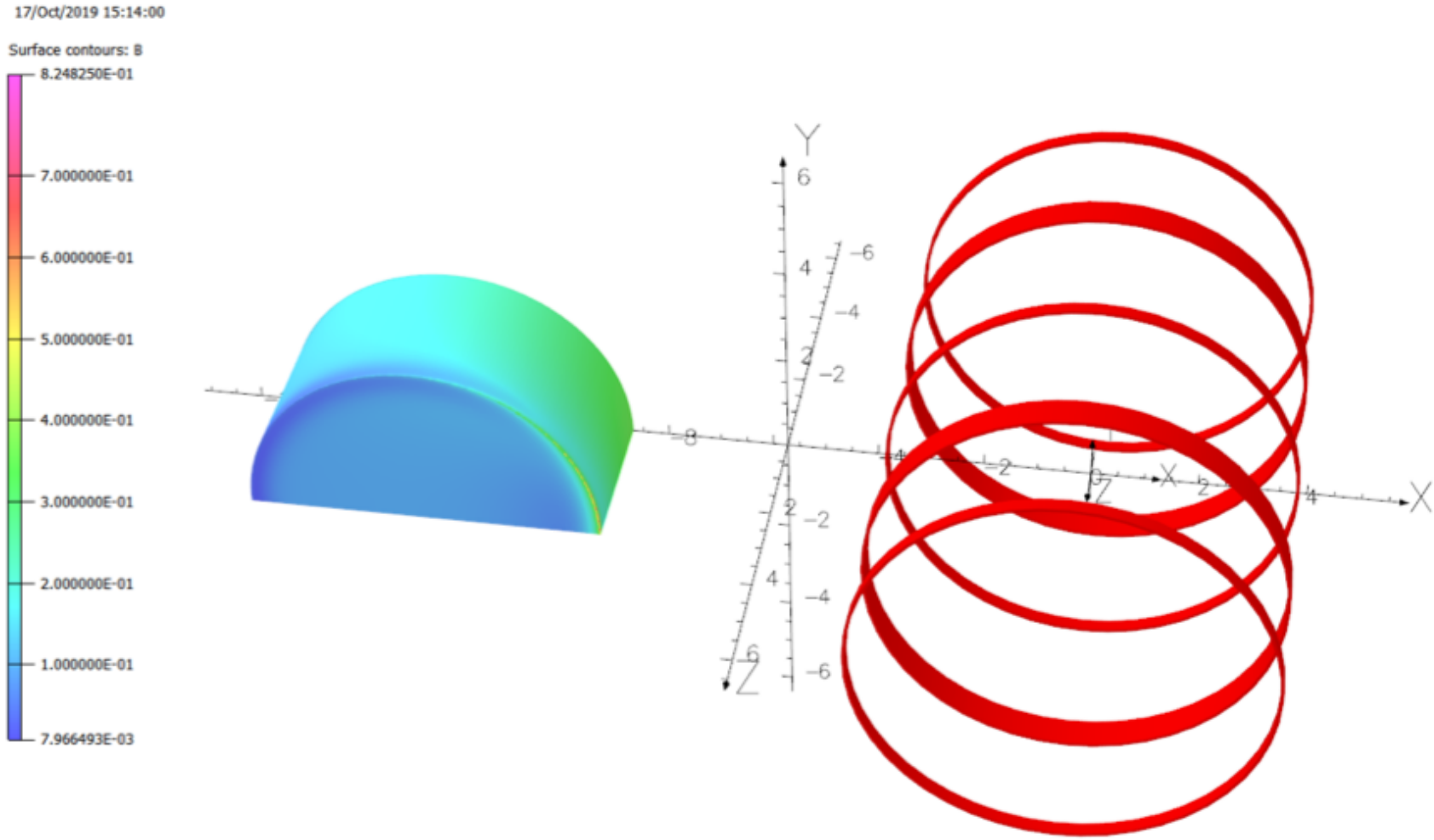

KLOE steel's effect on MPD field

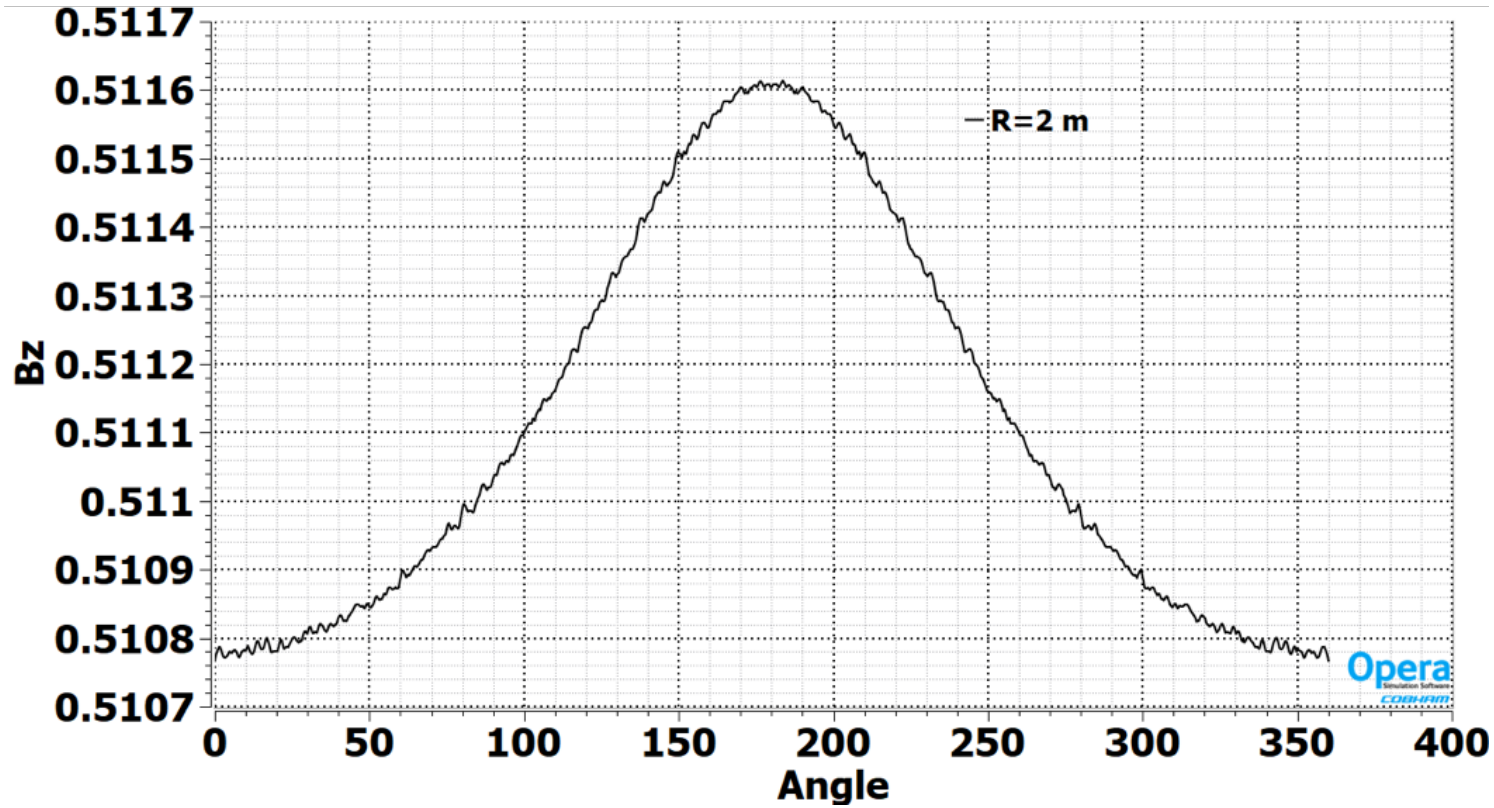

The center field without KLOE is 0.505362 T with KLOE 0.50631 T or 9.48 Gauss less.
So, the possible field variations are in the range of 0.2% during MPD travel in Z-direction as we move off-axis (no corrections applied). With in-situ measurement (Hall, NMR probes), will do better.

Alternatives to the reference design

- Andrea will discuss a completely different concept in the next talk.
- In the next few slides, I will examine some alternatives to the 5-coil design and discuss their motivation
  - 4-Coil design
  - 2-Coil design
  - 2-Coil with partial return yoke (PRY)

Motivation to reduce number of coils

- Remove center coil so that ECAL can effectively fit between coils
- This allows the inner radius of the coils to be reduced from 7m to ~ 6m
- MPD width reduced from 8.4m to 7.4m (maybe a bit less)
- Radial space for ECAL + μ tagger is ~ 0.8m (on axis) to stay within the 7.4m face-to-face width
- Cost reduction
  - Fewer coils
  - Less stored energy for remaining coils

4-coil configuration

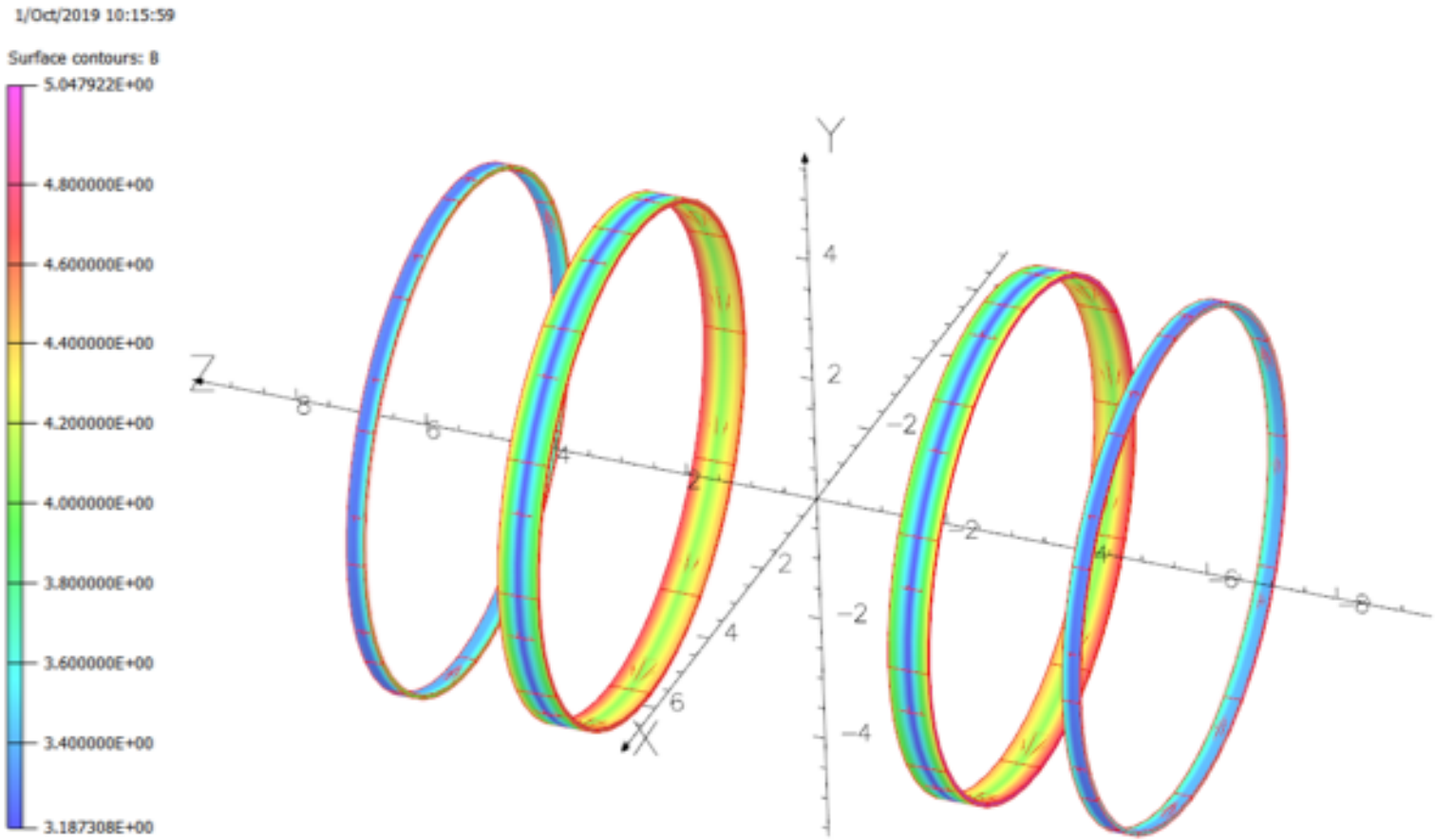

2-coil configuration

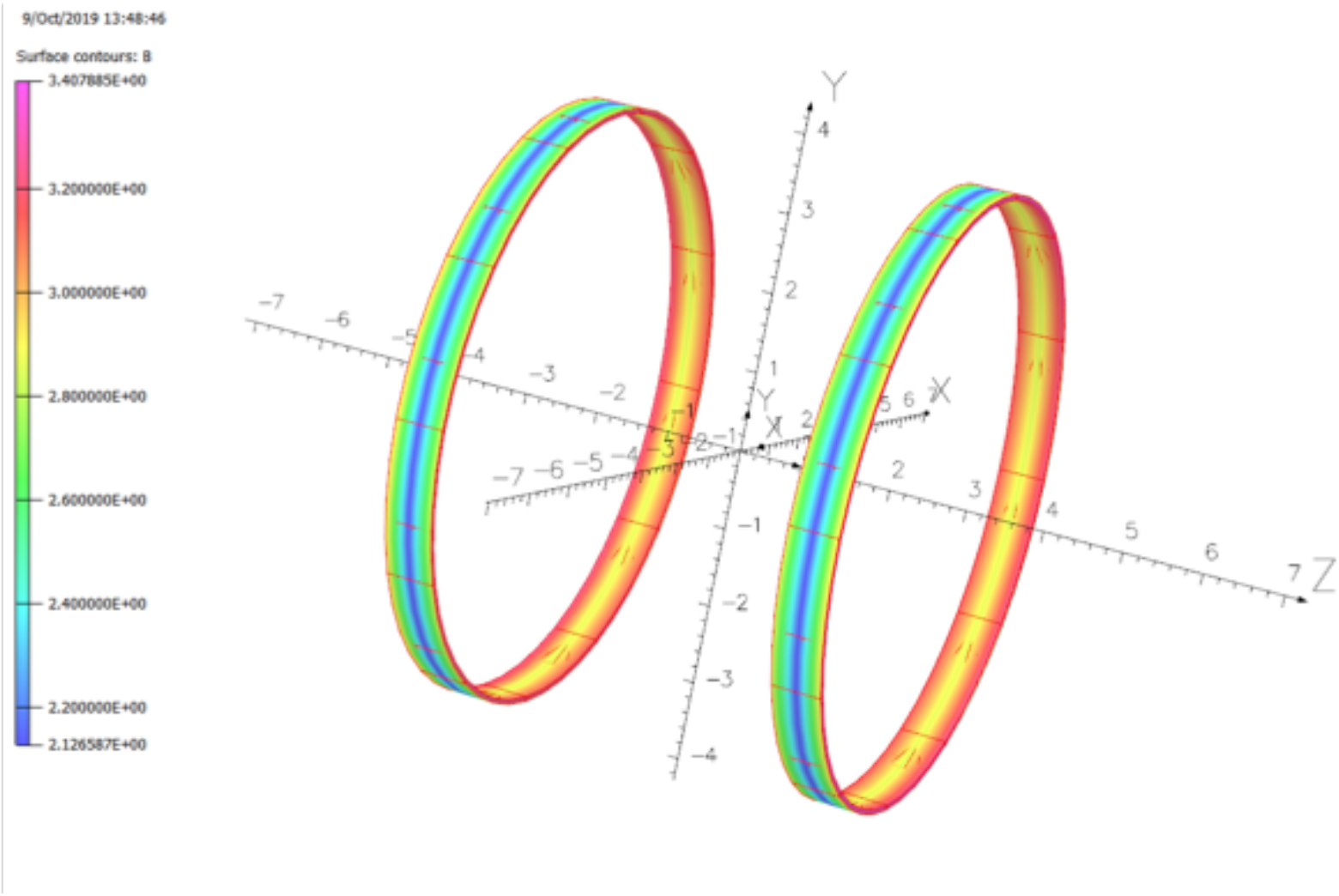

2-coil with partial return yoke

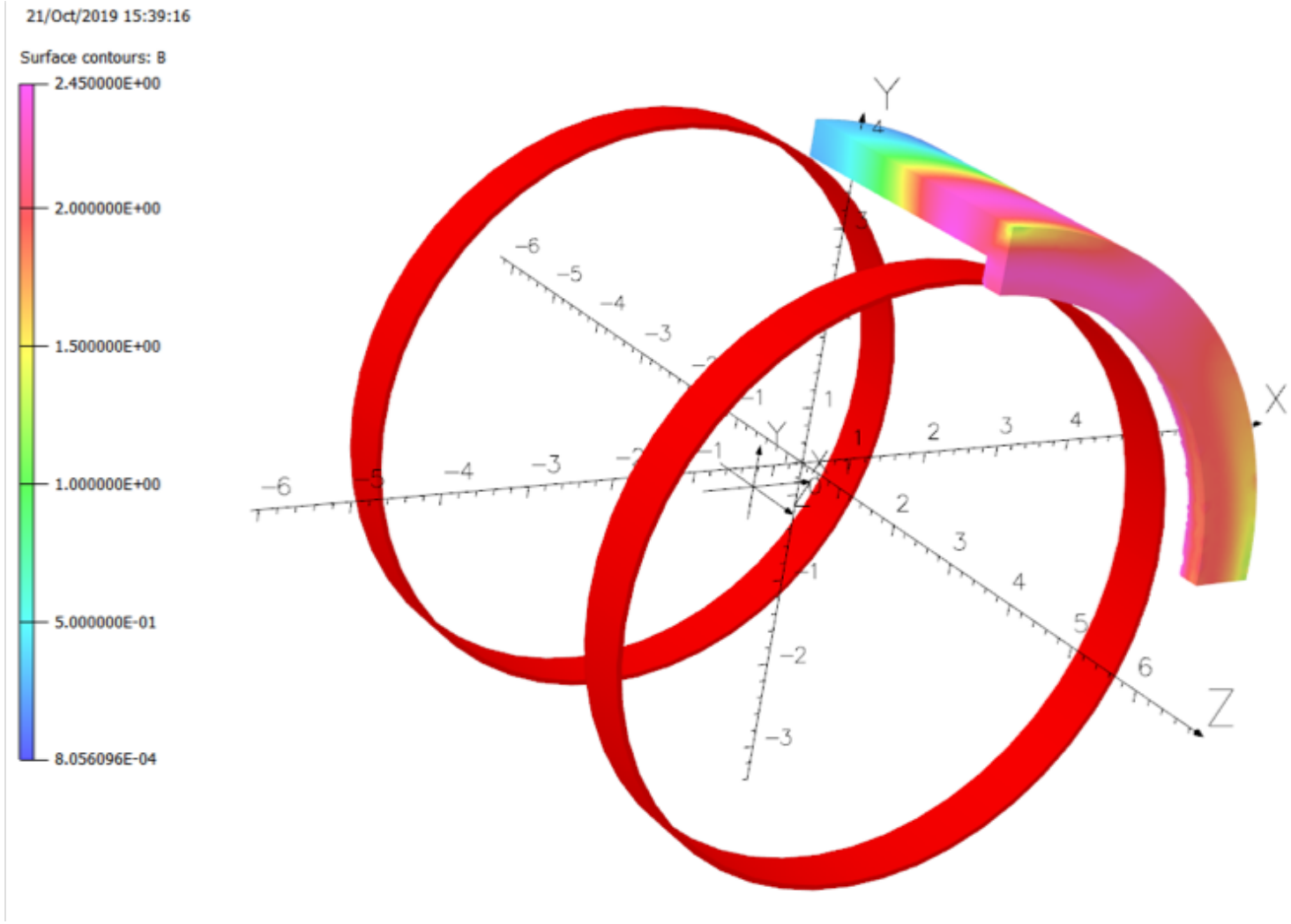

Field uniformity and stray fields

Ref. Design: Uniformity & stray field

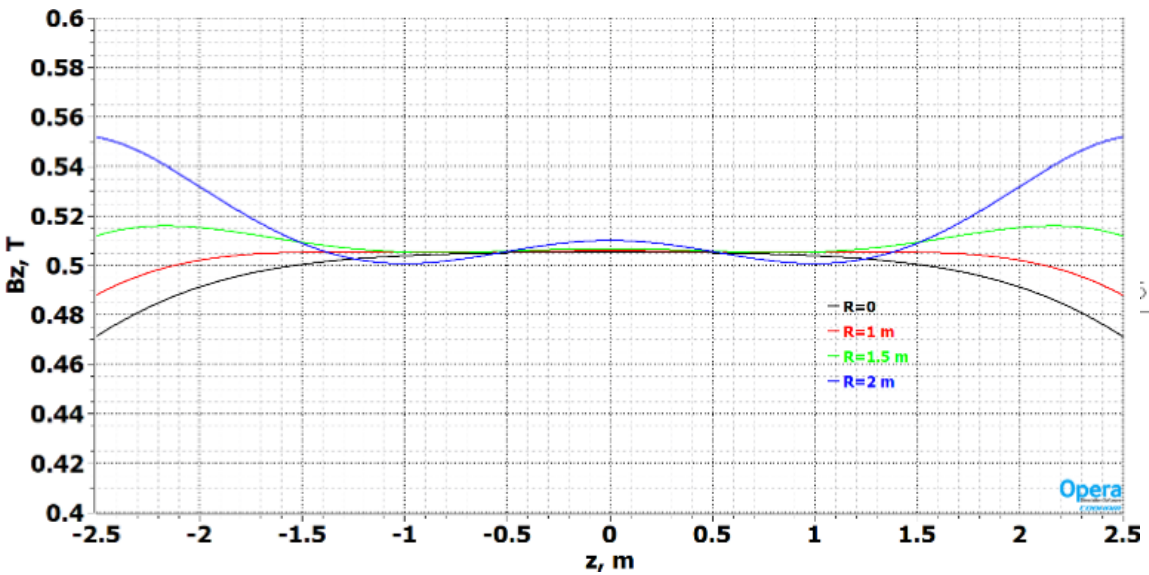

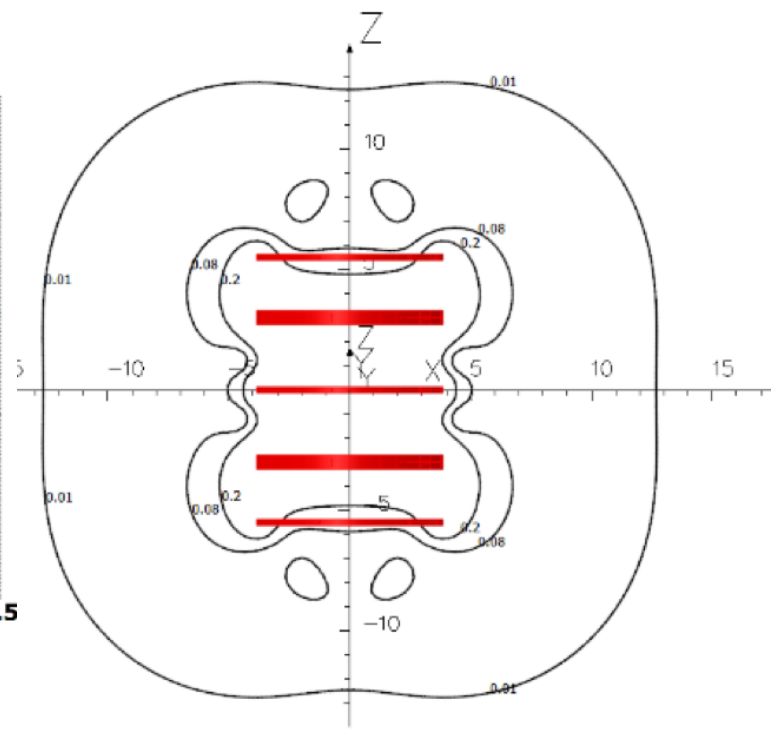

4-coil configuration

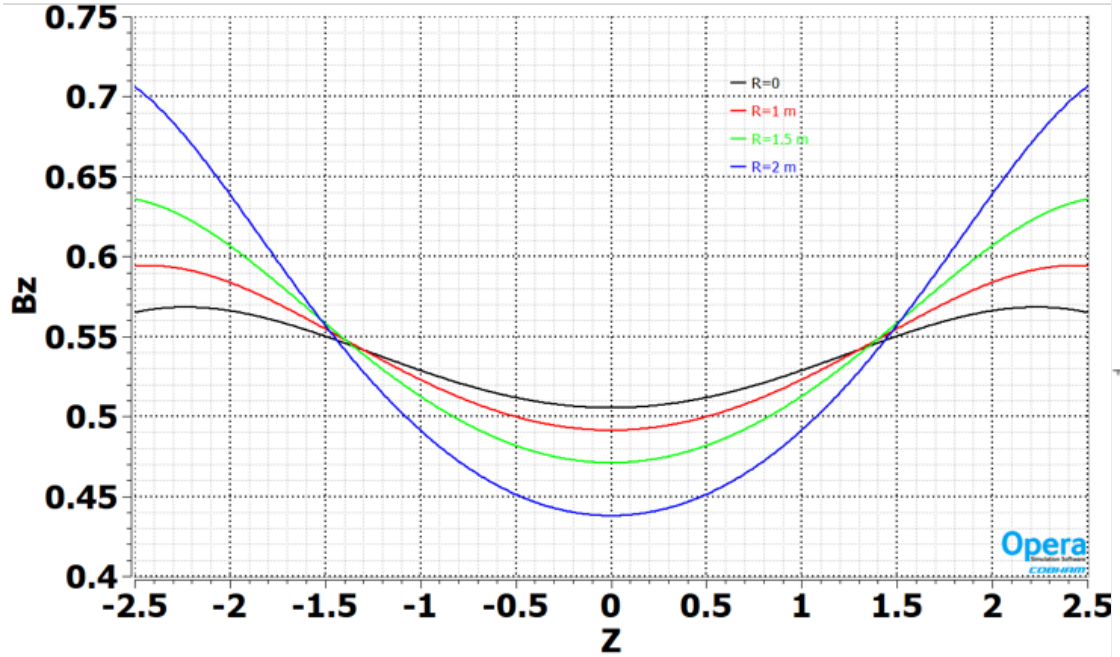

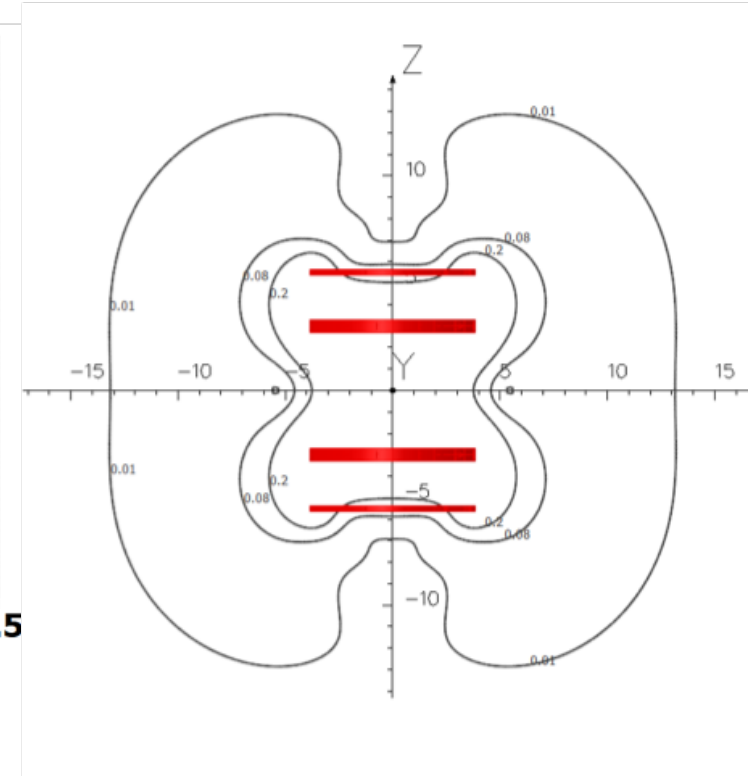

Note: 4 & 2 coil data still has coil package ID at 7m

2-coil configuration

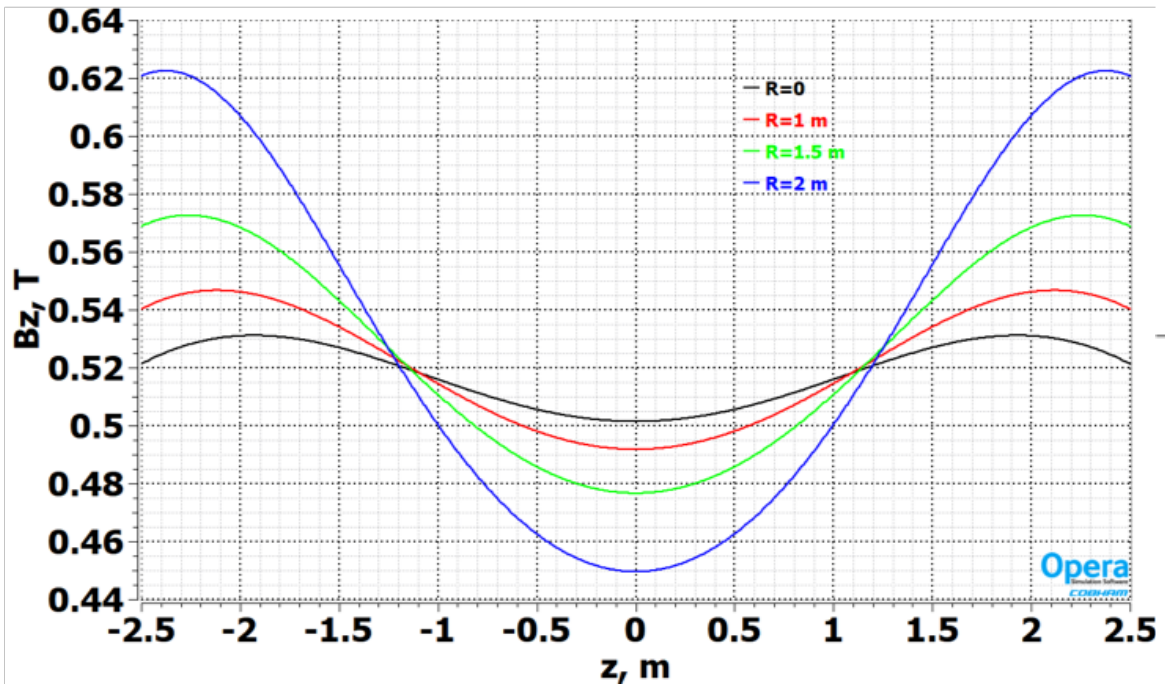

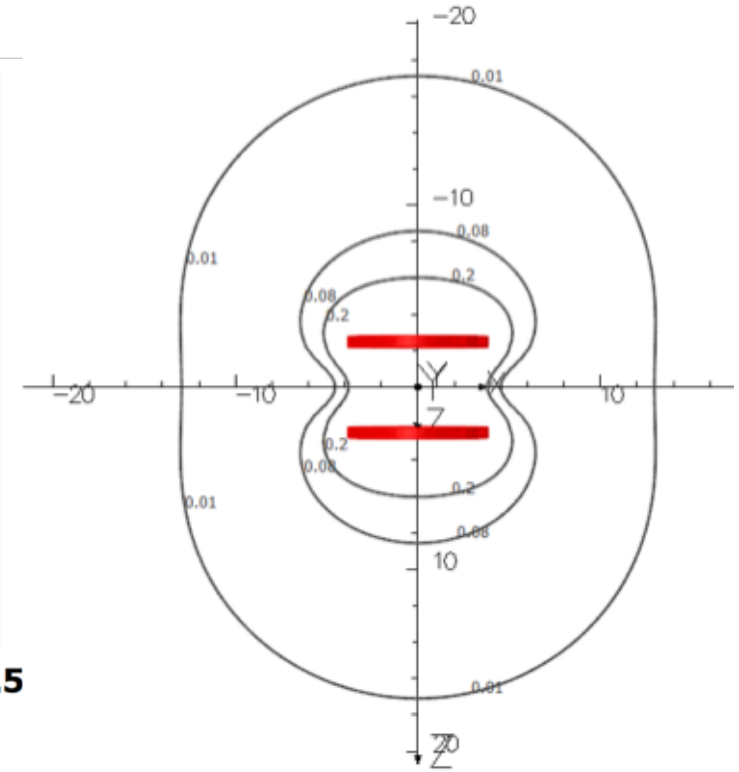

2-coil configuration with PRY

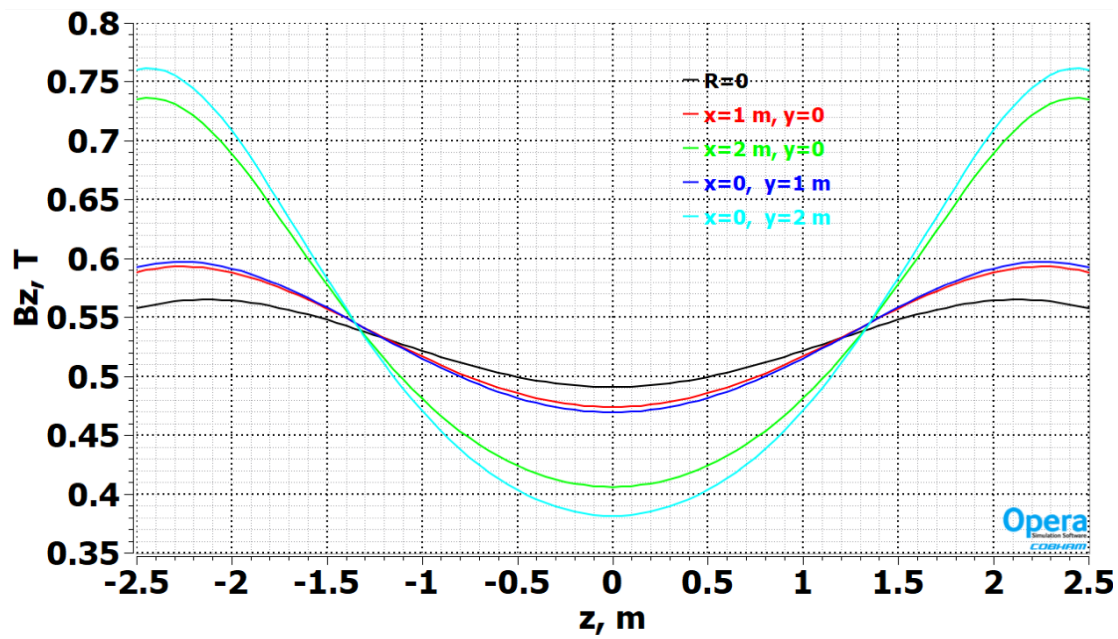

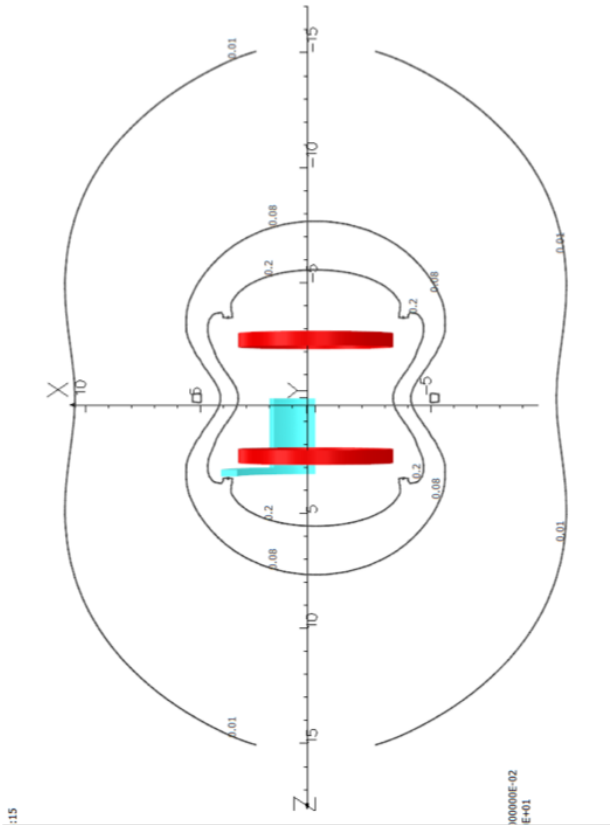

(-) PRY creates azimuthal asymmetry & lowers central field & adds dead material

(+) Can be used to support coils and for the μ tag

Conclusions

- MPD magnet reference (5 coil) design produces good field uniformity and manageable stray field.
  - Overall design very mature
  - Field interaction with KLOE steel small.
  - Forces (20t) acceptable
- Alternate configurations with 4 and 2 coils are under study.
  - Allows ECAL to move inwards in radius
  - Overall size in beam direction reduced by ~ 1m
  - Significant cost reductions
  - Can we live field non-uniformity and stray field?