Magnetrons & Application for the EIC

G. Kazakevich

High-power electro-vacuum RF sources for superconducting accelerators available from industry

Feature	Mode	Gridded tubes	IOT	Klystrons	Magnetron
Operation type		Amplifier	Amplifier	Amplifier	Forced oscillator
Frequency	CW Pulsed	30-470 MHz 30- 470 MHz	0.5-1.3GHz 0.5-1.3GHz	≥350 MHz	~200-2000 MHz
P_{Out}	CW Pulsed	>1000-30 kW >1-0.1 MW	100-30 kW ~100 kW	Up to a few MW	300 kW 600 kW
Gain		14-16 dB	20-23 dB	30 – 50 dB	≤ 11 dB
Efficiency		Up to 70%	Up to 70%	Up to 65%	More than 85%
HV	CW	Up to 30 kV	Up to 70 kV	≥120 kV	≈ 32 kV
Capital cost of power unit		≈ $6/1 W	≈ $7/1 W	≈ $9/1 W	≈ $1/1 W
Theory, simulations		Yes	Yes	Yes	Phenomenological models

The magnetrons are most efficient RF sources with lowest capital cost!

E. Montesinos, "Gridded tubes", Proton Driver Efficiency Workshop, 29.2-3.2, 2016.
C. Marchand, "Development of efficient Klystrons", Magurele, 3, 23, 2017.
A. Dexter, "Magnetrons for accelerators", Efficient FR Sources Workshop, 6. 2014.

Phase control in magnetrons

The phase control in magnetrons first was provided by the phase-modulated resonant ("locking") signal injected into the magnetron.

H. Wang, R. Rimmer et al., JLab, A. Dexter et al., Lancaster University, THPEB067 in Proceed., of IPAC 2010, 4026-4028, Kioto, Japan, 2010.

A wide-band phase control was studied in collaboration Muons, Inc - Fermilab

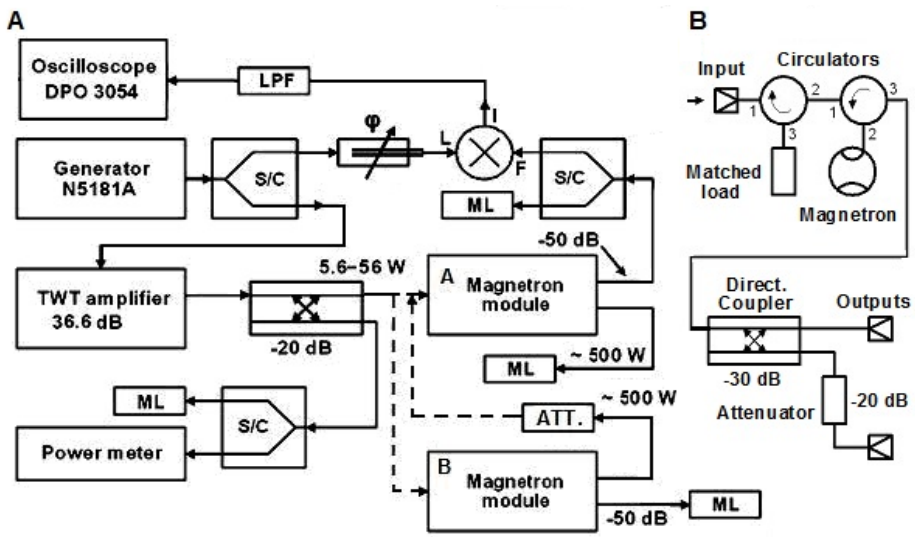

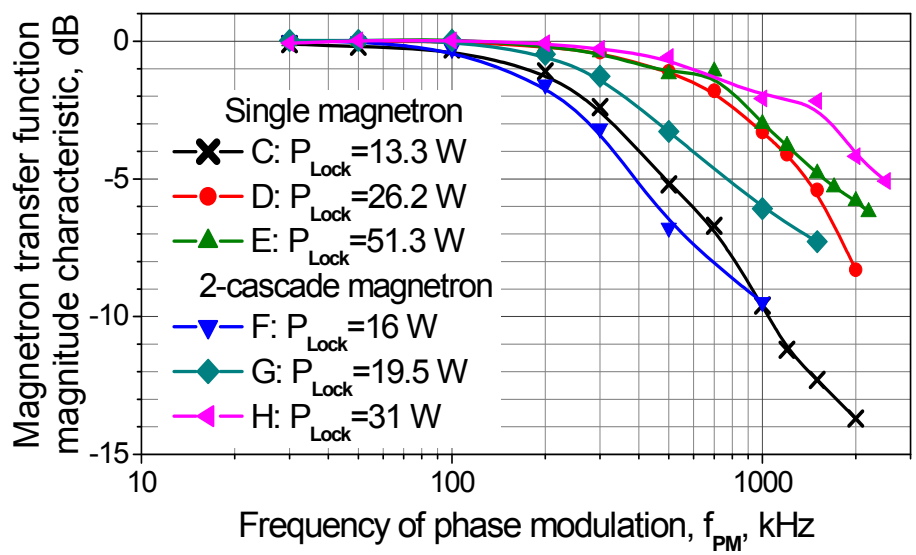

A- schematics for test of single and 2-cascade magnetrons by a phase-modulated frequency-locking signal. S/C is a splitter/combiner, LPF is a low pass filter, ML is a dummy load, and ATT is an attenuator. B- schematics of the magnetron module.

Transfer function magnitude characteristics of the phase control measured by the Agilent MXA N9020A Signal Analyzer in the phase modulation domain at the magnitude of the phase modulation of 4 deg. with 2.45 GHz single and 2-cascade magnetrons in dependence on power of the injection-locking signal, P_{Lock}.

G.Kazakevitch, et al., Muons, Inc., B. Chase, R. Pasquinelli, V. Yakovlev, et al., FNAL, NIM A 760 (2014) 19-27.

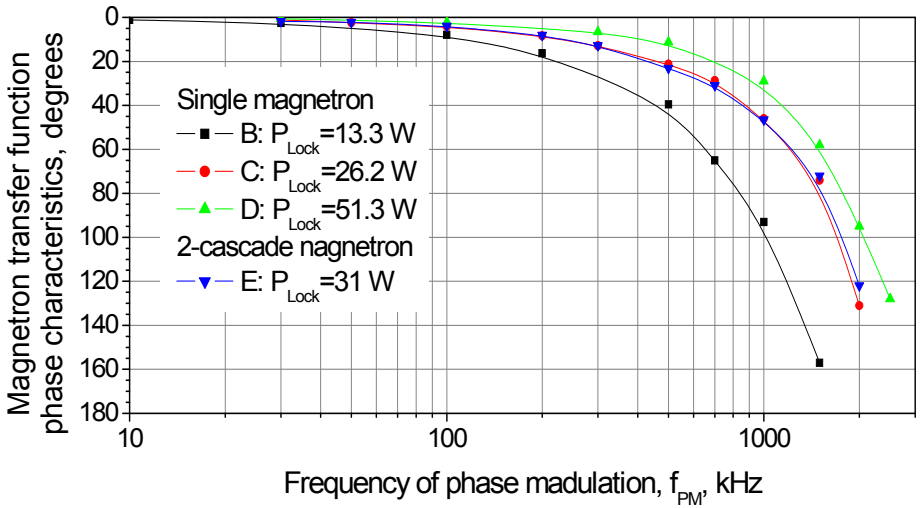

Transfer function phase characteristics of the single and 2-cascade 2.45 GHz magnetrons injection-locked by the phase-modulated signal with magnitude of 20 deg. vs. the modulating frequency, f_{PM}.

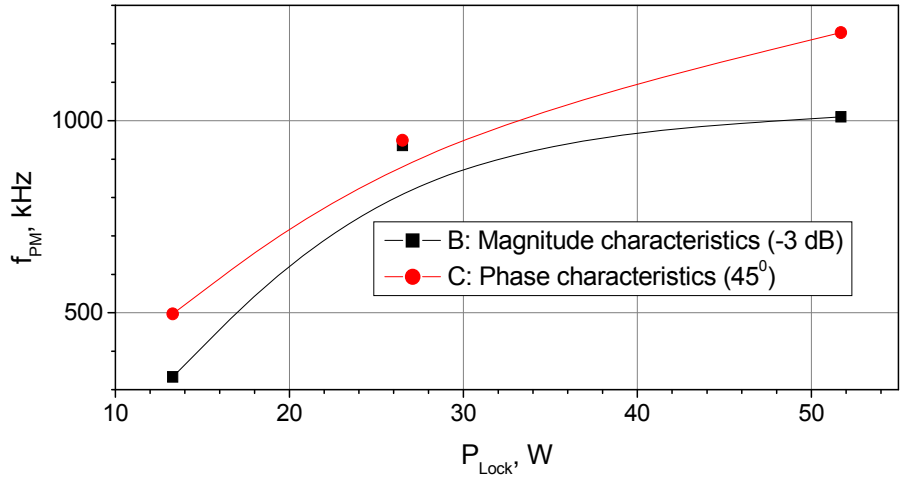

Estimates of the feedback loop bandwidth at the phase control in 2.45 GHz magnetrons.

The magnitude and phase Bode plots show capabilities of the magnetrons for a fast dynamic phase control.

In 2014, 2015 were developed and demonstrated wide-band vector methods of power control of magnetrons. The methods are reduced to the phase control.

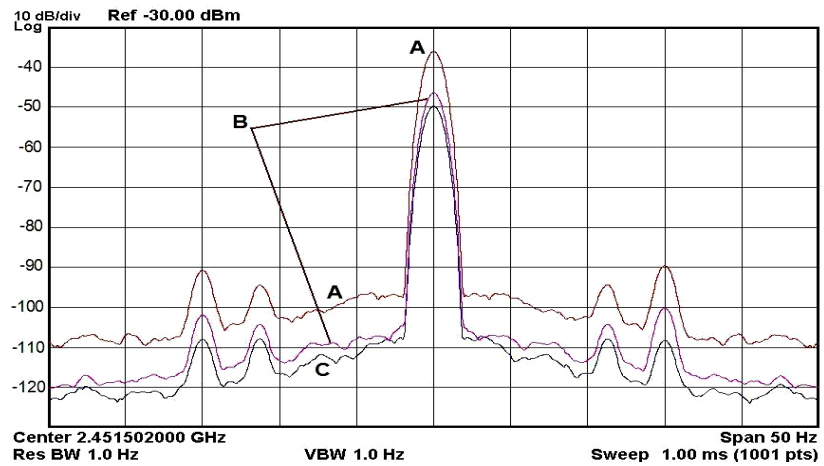

Carrier frequency spectra of the magnetron. A and B are output signals, the phase modulation is absent or exists (2 rad, 2 MHz), respectively; C- the injected signal, P_{Out}/P_{Lock}=13.4 dB, the phase modulation is absent.

G. Kazakevich, et al., Muons, Inc., V. Lebedev, et al., FNAL, in Proceed. of IPAC17, 4386-4388, 2017.

G. Kazakevich, et al., Muons, Inc., V. Yakovlev, et al., FNAL, NIM A 760 (2014) 19-27.

Vector power control in magnetrons

Power control may be reduced to independent phase control in the both channels of the 2-channel transmitter with vector summation of the output signals in a 3 dB hybrid.

Power control may be provided with a single-channel transmitter by an additional modulation of the phase modulation depth.

G.Kazakevitch, at al., Muons, Inc., B. Chase, R. Pasquinelli, V. Yakovlev, et al., FNAL, NIM A 760 (2014) 19-27.

B. Chase, R. Pasquinelli, E. Cullerton, P. Varghese, JINST, 10, P03007, 2015.

The vector methods provide a fast power control in magnetrons using phase-modulated injected resonant signals. They are based on a fast redistribution of the magnetron power between the SRF cavity and the dummy load. This decreases the average efficiency notably at a wide range of power control.

We developed a kinetic model of magnetron generation substantiating a novel method of power control in the range ≈10 dB based on a wide-range current control in a magnetron driven by the sufficient (up to -10 dB) resonant injected signal. In this regime the magnetron stably operates below and above the self-excitation threshold voltage. This method allows avoidance of the losses of magnetron power in a dummy load providing highest efficiency at the wide-range power control. The bandwidth of the power control ~10 kHz is sufficient for superconducting accelerators with megawatts beams.

G. Kazakevich et al., NIM A 839 (2016) 43-51.
G. Kazakevich et al., PRAB, 21, 062001 (2018)

Stability of magnetron operation below and above the self-excitation threshold

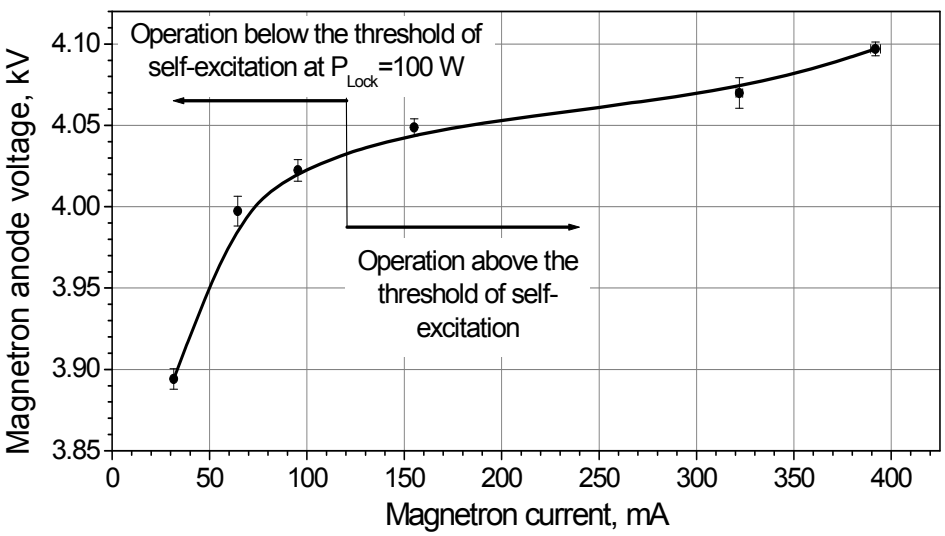

V- I characteristic of 1.2 kW magnetron measured at P_{Lock} =100 W. The solid line (B-spline fit) shows available range of current with stable operation of the 2.45 GHz CW tube at the given P_{Lock}.

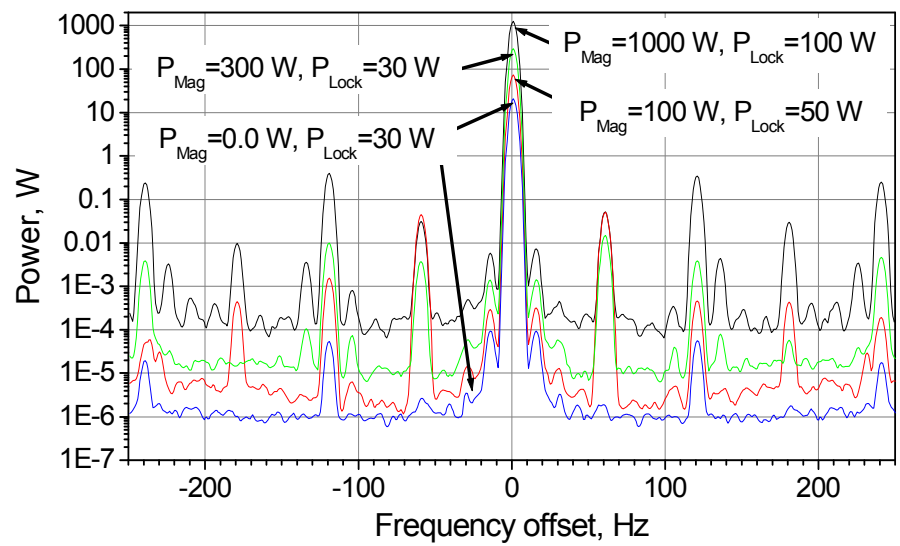

Offset of the carrier frequency at various powers of the magnetron, P_{Mag}, and the injected signal P_{Lock}. The traces at P_{Mag} =100 and 300 W were measured below the self-excitation threshold. The trace P_{Mag} =0.0 W, P_{Lock} =30 W shows the frequency offset of the injected signal when the magnetron HV is OFF.

G. Kazakevich, et al., Muons, Inc., V. Lebedev, et al., FNAL, in Proceed. of IPAC17, 4386-4388, 2017.
G. Kazakevich, R. Johnson, V. Lebedev, V. Yakovlev, NIM A 839 (2016) 43-51.

Average efficiency of magnetrons operating at a wide range of power control and demonstration of a dynamic control

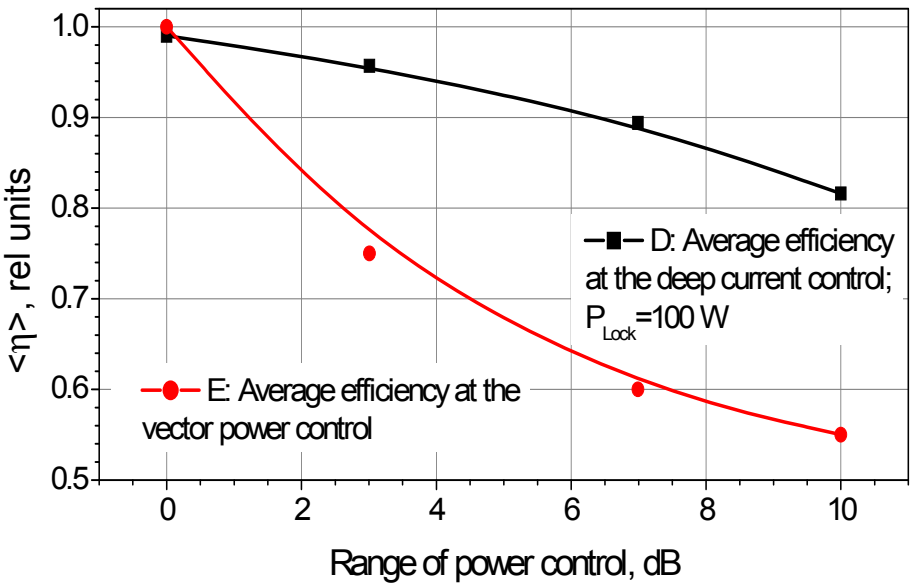

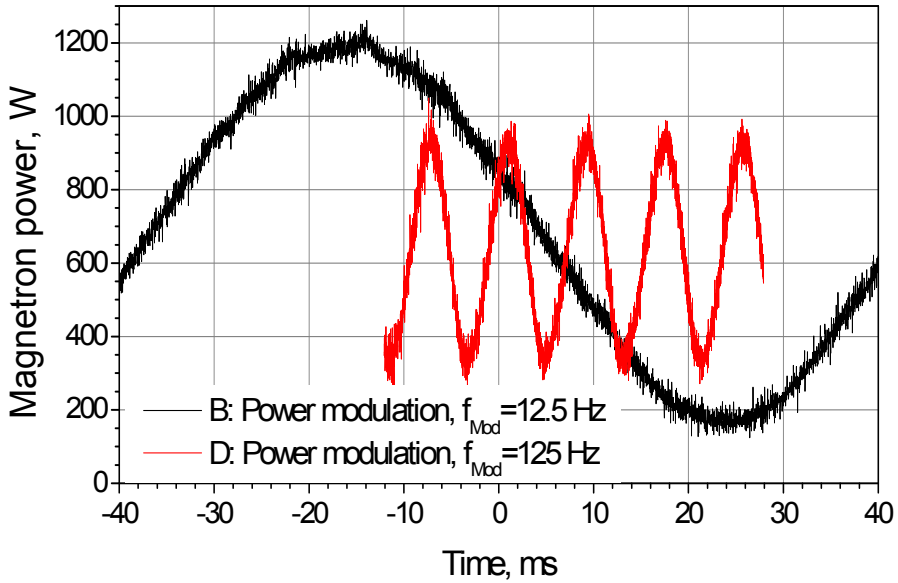

Relative averaged magnetron efficiency vs. range of power control for various methods of control. D- is average efficiency of the 1.2 kW magnetron driven by the injected resonant signal of -10 dB and measured at a deep magnetron current control. E- is average efficiency of 1 kW magnetrons with vector power control.

Modelling of a dynamic power control by a wide-range management of magnetron current with a harmonic signal controlling the HV switching power supply with a current feedback loop. The locking signal power is -10 dB.

G. Kazakevich, et al., Muons, Inc., V. Lebedev, et al., FNAL, in Proceed. of IPAC17, 4386-4388, 2017.

The spectral power density of the magnetron noise

P_{Mag}=100 W

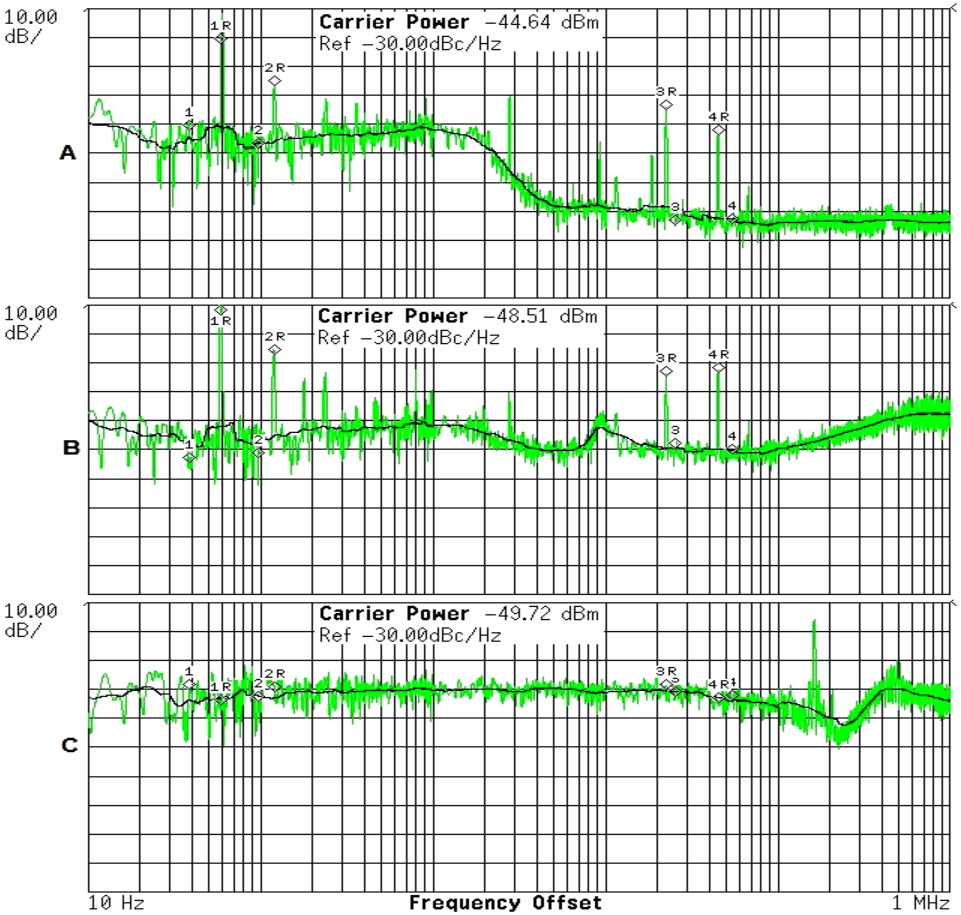

P_{Mag}=1000 W

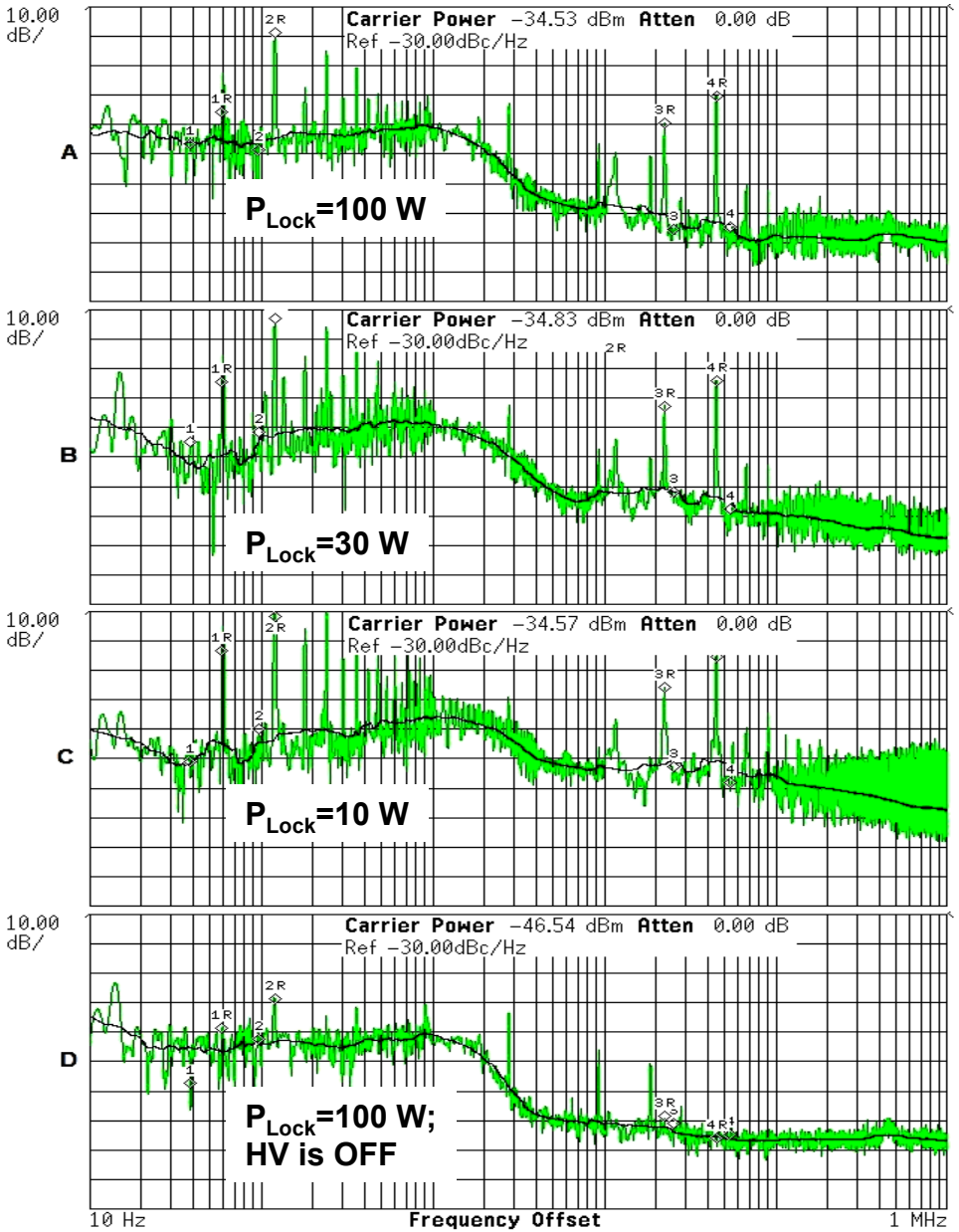

The spectral power density of the noise at various power levels of the locking signal at P_{Mag} = 100 W. A - P_{Lock} =100 W, B - P_{Lock} =30 W, C - P_{Lock} =10 W, Black traces show the averaged spectral density of the noise.

"Stimulated" generation of magnetrons operating below the self-excitation threshold voltage

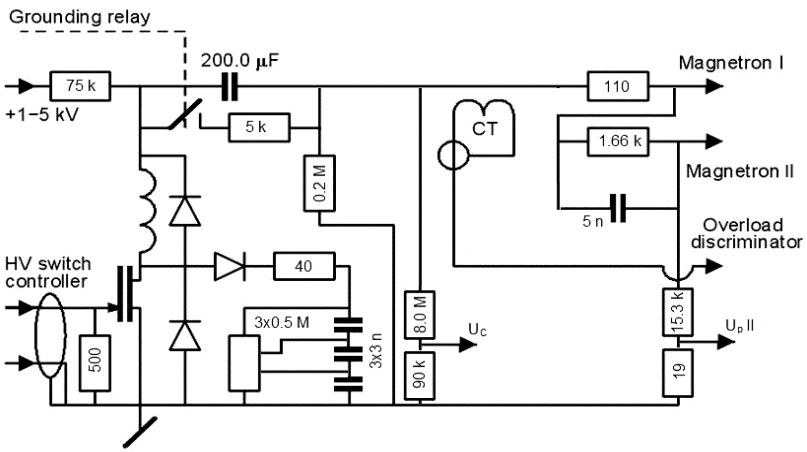

Schematic diagram of the pulsed HV power supply with Behlke MOSFET IGBT 10 kV/800 A switch.

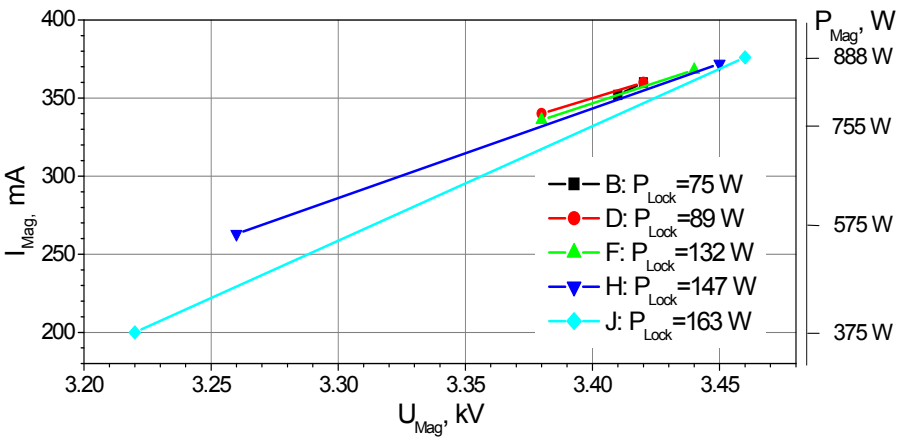

Ranges of the cathode voltage and the pulsed current required for the stimulated pulsed RF generation of the 2M219G magnetron vs. power, P_{Lock} of the injected resonant signal. The right scale shows the magnetron output power.

The proof of the principle of this technique was demonstrated with a CW, 2.45 GHz microwave oven magnetron type 2M219G with nominal output power of 945 W.

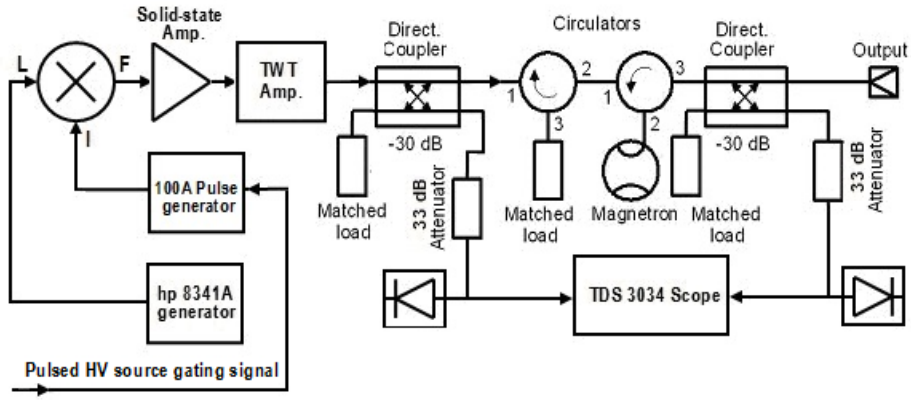

Setup to study the ON-OFF switch control of the magnetron driven by pulsed resonant injected signal.

The solid lines indicate admissible ranges of variation of the magnetron cathode voltage and the magnetron current at various locking power P_{Lock}, the self-excitation threshold voltage is 3.69 kV.

Properties of magnetron operating below the "stimulated" generation mode

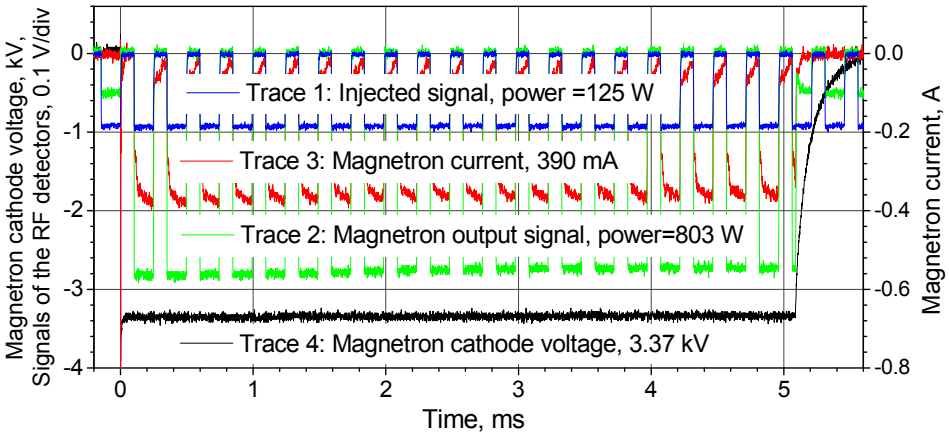

4 kHz trains of 147 μs pulses (duty factor of ≈59%). Traces 1 and 2 - the resonant injected and the magnetron output RF signals with powers of 125 W and 803 W, respectively; trace 3 - the magnetron pulsed current (right scale); trace 4 - the magnetron cathode voltage (left scale, 1 kV/div).

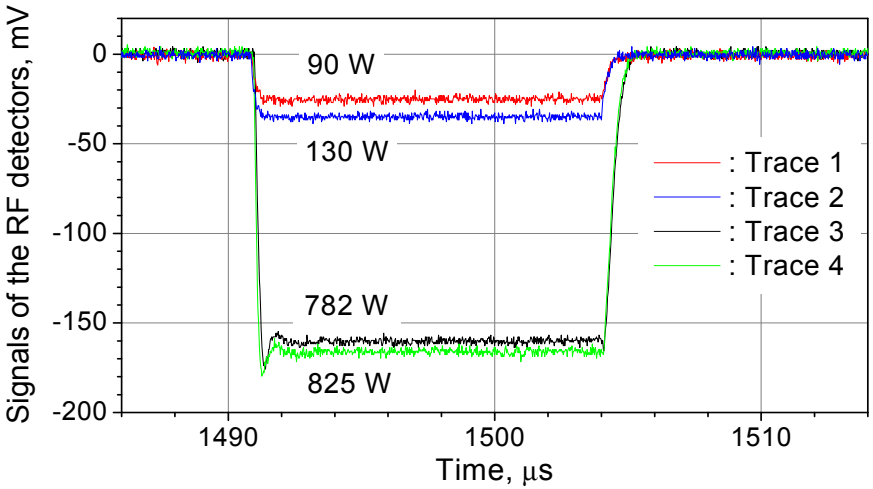

Response of the magnetron powered below the self-excitation threshold and driven by a 20 kHz train of 13 μs pulses at the driving signals with power of 90 W (trace 1) and 130 W (trace 2). Traces 3 and 4 show the magnetron output RF signal as a response on the driving signals of traces 1 and 2, respectively.

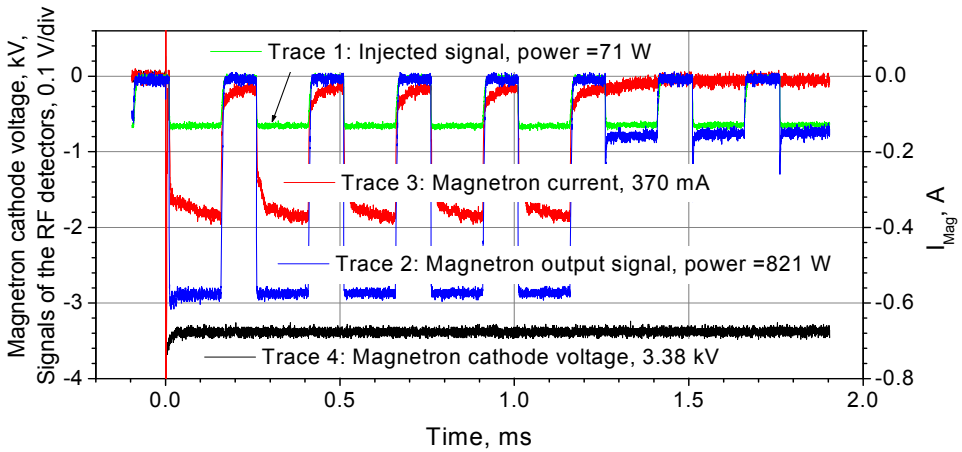

4 kHz trains of 147 μs pulses: traces 1 and 2 - the resonant injected and the magnetron output RF signals with powers of 71 W and 821 W, respectively; trace 3 - the magnetron pulsed current (right scale); trace 4 - the magnetron cathode voltage (left scale, 1 kV/div).

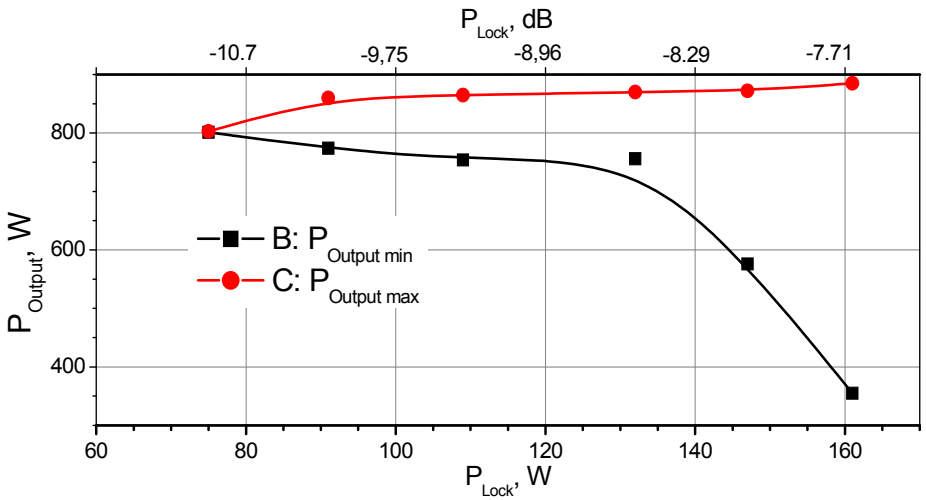

Measured maximum and minimum output power levels of the 2M219G magnetron switched ON-OFF and powered below the self-excitation threshold vs. the power P_{Lock} of the RF driving pulsed (switching ON-OFF) signal.

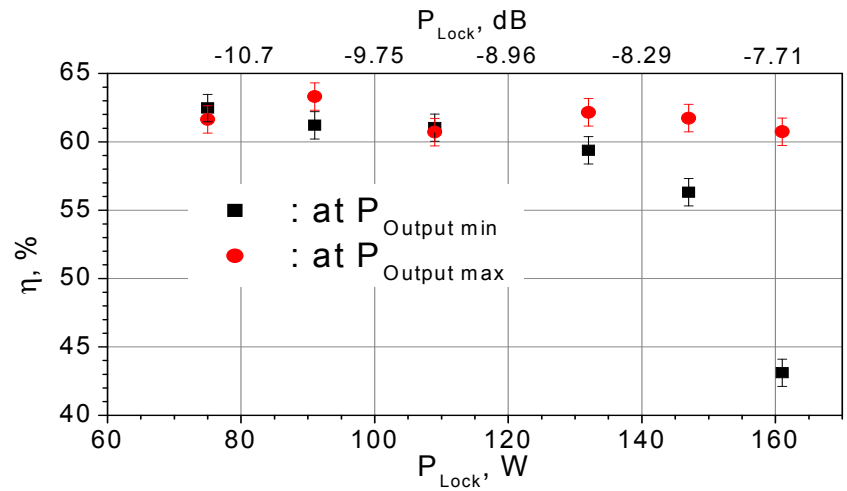

Conversion efficiency, η, of the 2M219G magnetron operating in the stimulated generation mode in dependence on power of the injected resonant signal P_{Lock}. Measured conversion efficiency of the magnetron in the self-excitation mode is 54%.

$$\eta \approx P_{RF} / (U_{Mag} \cdot I_{Mag} + P_{Lock}).$$

Possible concept of highly-efficient magnetron transmitter

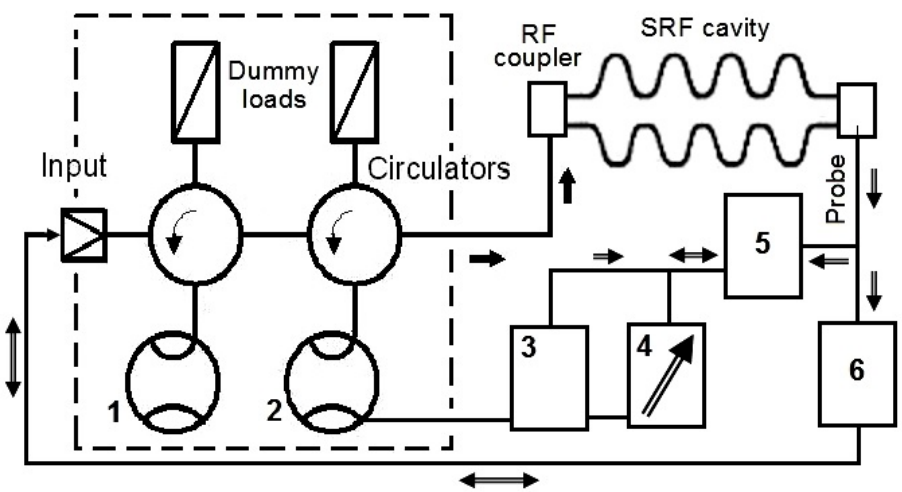

Given the range of RF power control requires quite narrow range of the control of cathode voltage $\Delta U_{Mag}/U_{Mag}$: $\Delta P_{RF}/P_{RF} \approx (Z_S/Z_D) \cdot \Delta U_{Mag}/U_{Mag}$; typically $Z_S \geq 10\, Z_D$.

1- low-power magnetron, 2- high-power magnetron with a control of the magnetron cathode voltage, uncontrollable high-power HV power supply. 4- low-power controllable HV power supply, 5- LLRF power control processor, 6- LLRF phase control processor.

Usage of magnetrons for EIC projects

Magnetrons driven by injection-locking signal may operate with remarkable phase stability both above and below the self-excitation threshold. A feedback applied to the locking signal enables precise and reliable control of the magnetron phase. Operation below the self-excitation threshold results in smaller phase noise. We developed a simple model which substantiates and explains observed characteristics of magnetron operation.

- *The locking signal power of about -10 dB allows precisely stable operation of magnetrons below and above the self-excitation threshold voltage. In this regime the magnetron power can be controlled over the 10 dB range by variation of its current with efficiency higher than can provide other methods. The control bandwidth is limited by the bandwidth of power supply control (typically 10 kHz).*
- *An increase of injected signal to -10 dB reduces the spectral power density of noise (by ≈ 20 dB/Hz) and increases the bandwidth of the phase control to hundreds of kHz.*
- *The novel method of the "stimulated" RF generation of magnetrons utilizes approximately the same power of the injected resonant signal. This preserves a wide-band phase control and reduced phase noise in magnetrons.*
- *The efficiency of magnetrons driven by a large injected signal in the "stimulated" generation mode is higher and the electron back-streaming is lower than in ordinary regimes due to better phase grouping.*
- *Operation below self-excitation threshold results in a lower cathode voltage and reduced the electron back-streaming on the cathode. Consequently, it provides more reliable operation of magnetrons and is expected to extended their lifetime.*

Thank you!