ESS MO to Main Phase Reference Line Connection with Active Drift Compensation

D. Sikora, M. Lipiński, A. Abramowicz, K. Czuba- ISE, Warsaw University of Technology, Poland

ABSTRACT

An important requirement for the European Spallation Source is to assure a precise phase synchronization of LLRF and Beam Diagnostics systems, which are operating at frequencies of 352.21 MHz and 704.42 MHz. The required phase accuracy at both frequencies is 0.1° for short term (during 3.5 ms pulse), 0.1° for long term between adjacent outputs and 2.0° for long term (hours to days) between any two points.

The phase synchronization system consists of a Master Oscillator located in the Klystron Gallery and a phase reference distribution system located mainly in the tunnel. The main part of the phase distribution system is a Phase Reference Line (PRL), a fully passive system based on a single 1-5/8" coaxial rigid line, which distribute both reference frequencies along the tunnel.

MO reference signals are amplified and distributed to the PRL by a concrete duct for cables and waveguides, connecting Klystron Gallery and the tunnel, called STUB. A high-power amplifier used at each frequency provides a power level of about +50 dBm. The amplifiers can drift significantly and differently for both frequencies. This can cause the phase drifts on each reference signal and between them. The high-power signals are combined together with a diplexer and distributed to the tunnel by a 7/8" coaxial cable. Ambient temperature variations in the tunnel and Klystron Gallery and the temperature changes in the STUB causes by waveguides operation can bring another phase drifts in the phase distribution system. That's why the active drift compensation system was developed to stabilize the phase reference in the connection from MO to PRL.

MO TO MAIN LINE

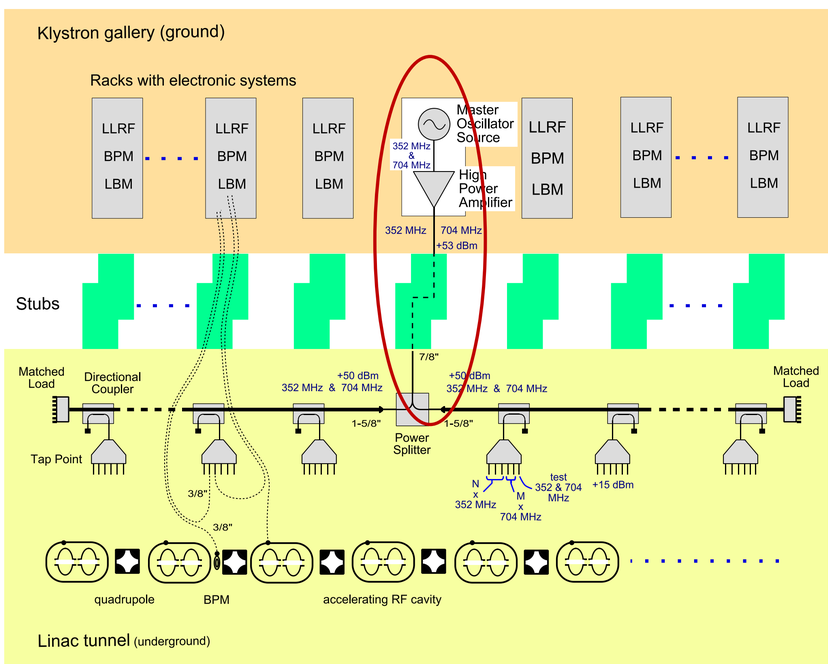

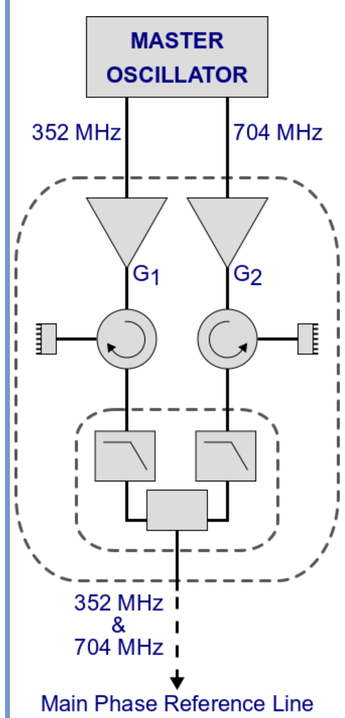

- ESS Master Oscillator located in Klystron Gallery generates 352.21 MHZ and 704.42 MHZ
- Diplexer combines high power reference signals (+50dBm each)
- Both MO phase references are distributed via a STUB (concrete duct)
- 45 m long 7/8" coaxial cable used to provide both references to the Main Phase Reference Line (PRL) located in the tunnel
- It's important to provide a stable phase (0,05 deg short term and 0,3 deg long term) between both MO frequencies at the PRL input

ACTIVE DRIFT COMPENSATION

Phase drifts appear mostly due to temperature variations on the entire signal chain going through 19"racks and the Klystron Gallery (amplifiers, diplexer, cables), the STUB and the tunnel (coaxial cable connection, significant temperature changes)

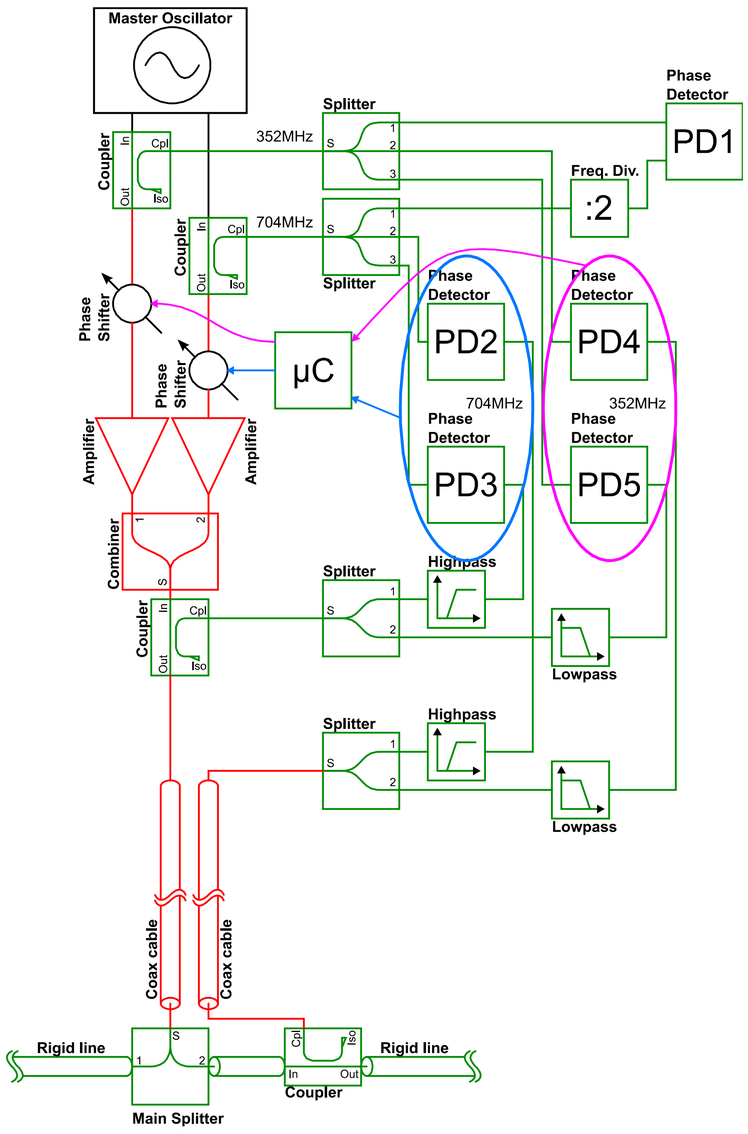

- Restricted use of active electronic devices in the tunnel due to radiation
- Directional coupler and a 7/8" coaxial cable (the same type and length) used to transport the phase information from the tunnel to the Klystron Gallery
- Active drift compensation system applied to stabilize phase drifts of the amplifiers and on the MO to PRL connection
- **Simultaneous phase control in the link at both operating frequencies**
- Components marked green are temperature stabilized

DRIFT COMPENSATION RESULTS

Drift compensation system tested using a climate chamber:

- 2x 10m of 7/8" cable to emulate connections between Klystron Gallery and the PRL in the tunnel
- 2x 5m of cables, different types to emulate different phase drifts of the high-power amplifiers
- Temperature changes by 20°C (20-40°C) to force significant phase drifts

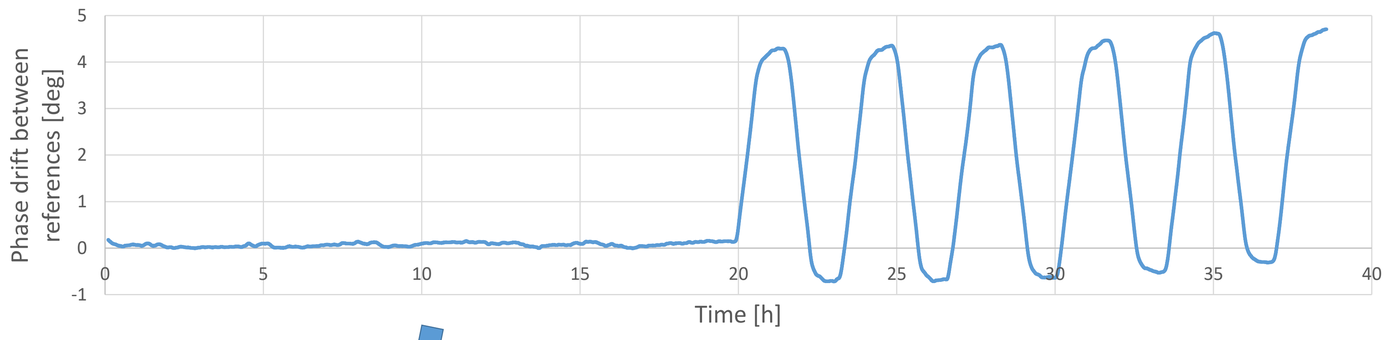

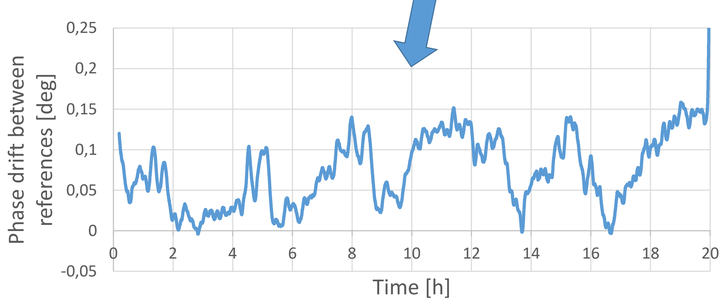

- Temperature changes provides ~5 deg of phase drift between MO references
- Active compensation was switched off after 20h of test
- **0.15 deg p-p stability between MO references with fedback on**
- **5 deg p-p stability with feedback off**

ACKNOWLEDGMENT

Work supported by Polish Ministry of Science and Higher Education, decision number DIR/WK/2016/06.

CONTACT

D.Sikora@elka.pw.edu.pl