Warsaw University of Technology

ise

EUROPEAN SPALLATION SOURCE

Design and Status of the Phase Reference Line for the European Spallation Source

Krzysztof Czuba

On behalf of the WUT and ESS PRL Team

LLRF 2019

Chicago, 01.10.2019

WUT Contributions to European Spallation Source (Polish In-Kind)

- **Phase Reference Line (PRL)***
- MTCA. 4 based ESS LLRF control system components# (Member of the Polish Electronic Group)
- RF electronics and cabling design, installation and tests for the Beam Diagnostics

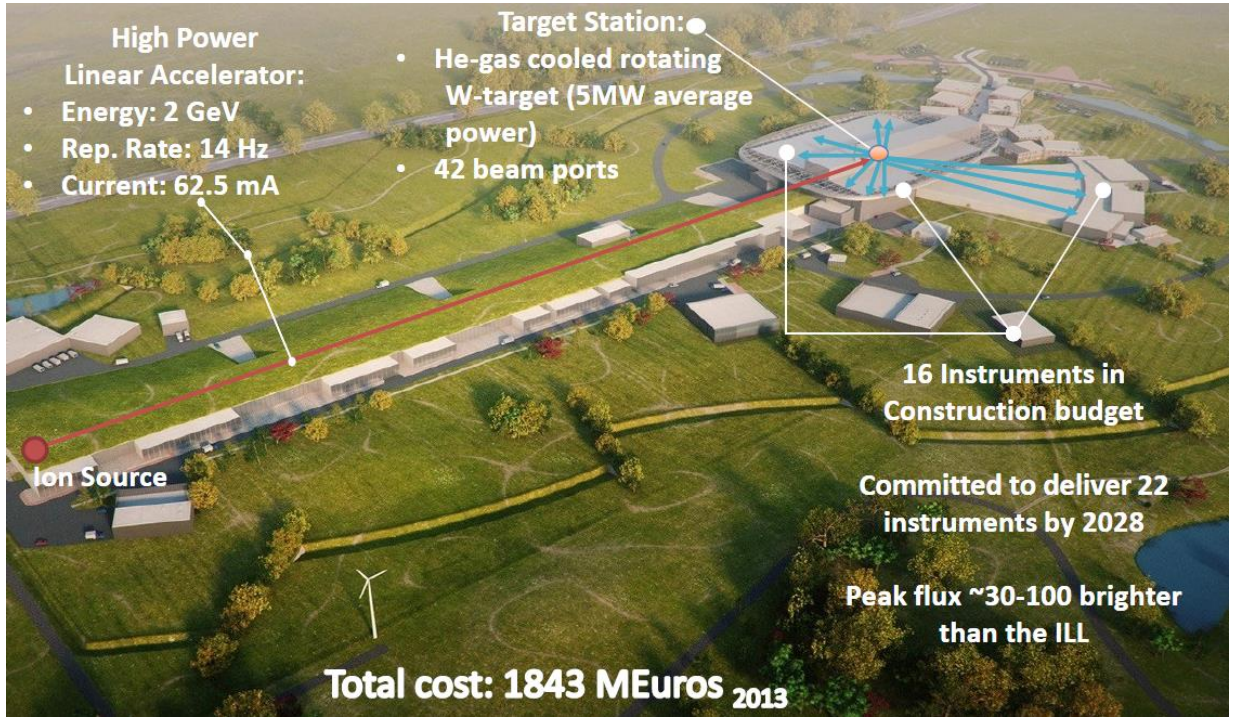

*Czuba Krzysztof et. al.: *Concept of the Phase Reference Line for the European Spallation Source*, MIKON 2018, Poznań, Poland ISBN 978-83-949421-0-6, ss. 512-514.

#J. Szewiński et al., "*Contribution to the ESS LLRF System by Polish Electronic Group*", IPAC2017, Cpenhagen, Denmark.

ESS Phase Synchronization

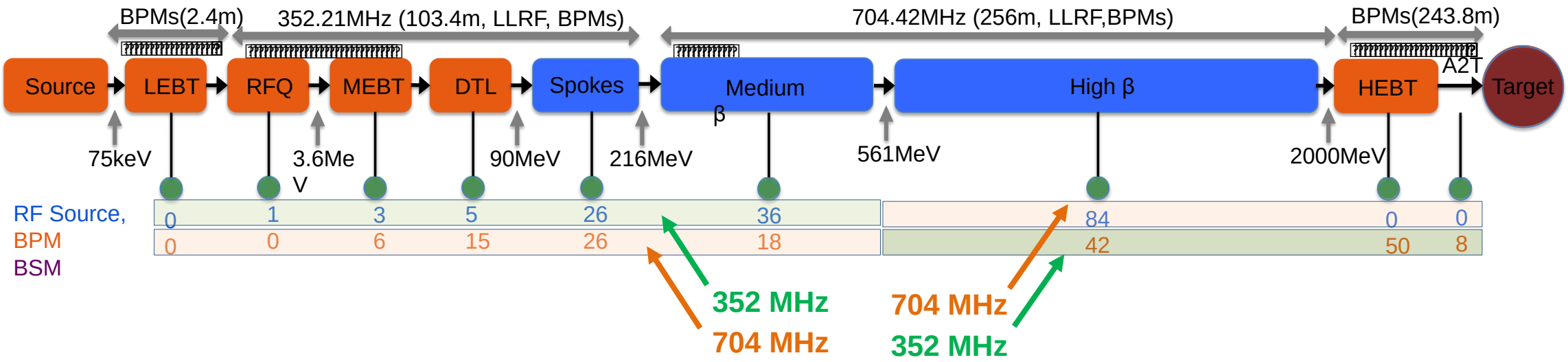

- Both 352 MHz and 704 MHz required along the entire linac
- ~300 devices, ~600 m long system
- Required phase synchronization:
  - 0.1° for short term (during 3.5 ms pulse),
  - 0.1° for long term between adjacent outputs
  - 2.0° for long term (hours to days)

Main Assumptions for the Phase Reference Line

- Passive distribution along the accelerator tunnel
- Radiation immunity
- 1/5” coaxial rigid line
- Single line for both 352 MHz and 704 MHz
- 58 signal taps (3 or 6 way), 294 total outputs
- Frequency selective, configurable tap outputs
- Equal power level at each output (+17 dBm +/- 1 dBm), at both frequencies
- Temperature and internal gas (Nitrogen) pressure control

General PRL Concept

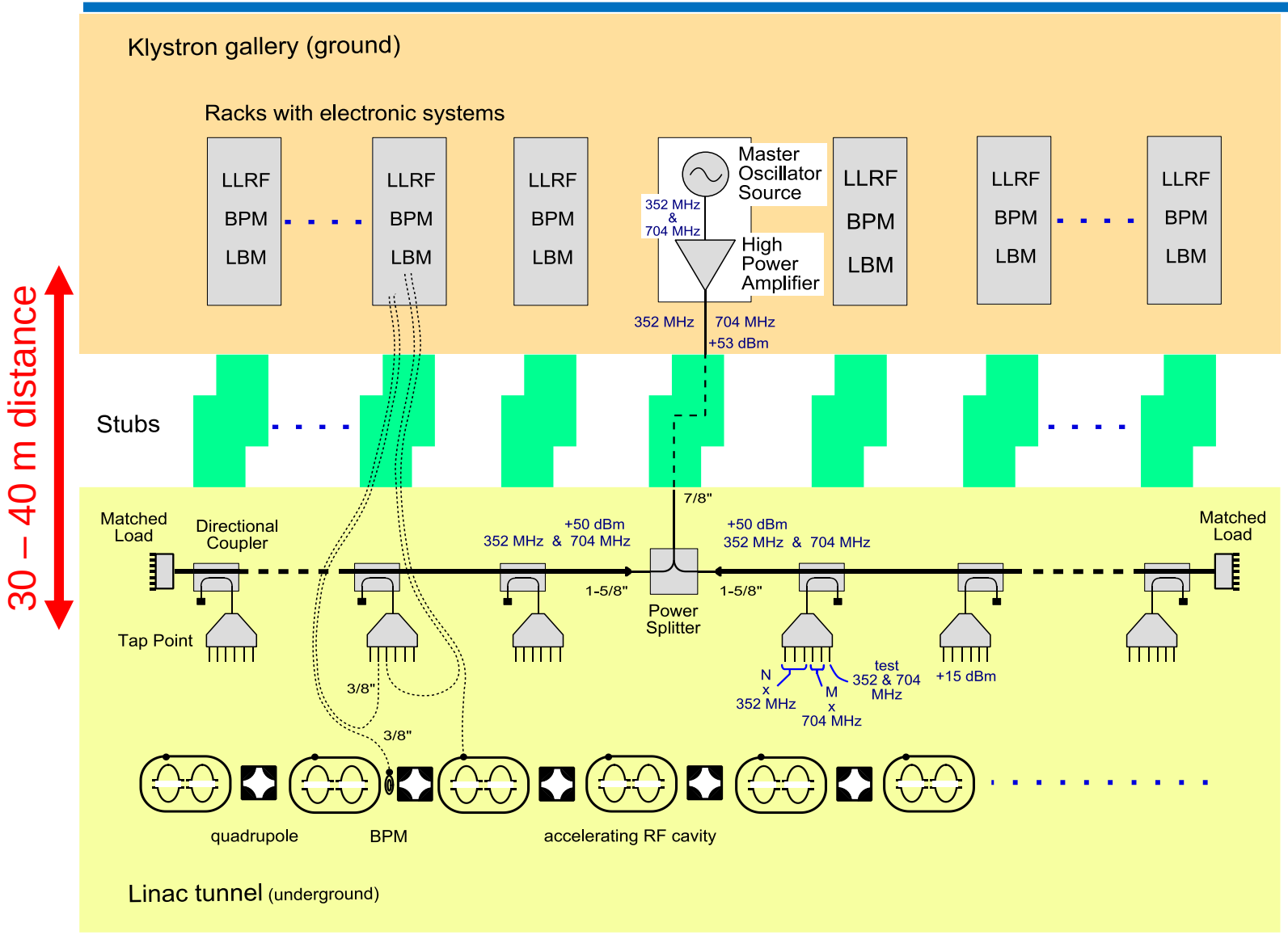

Klystron Gallery before installations

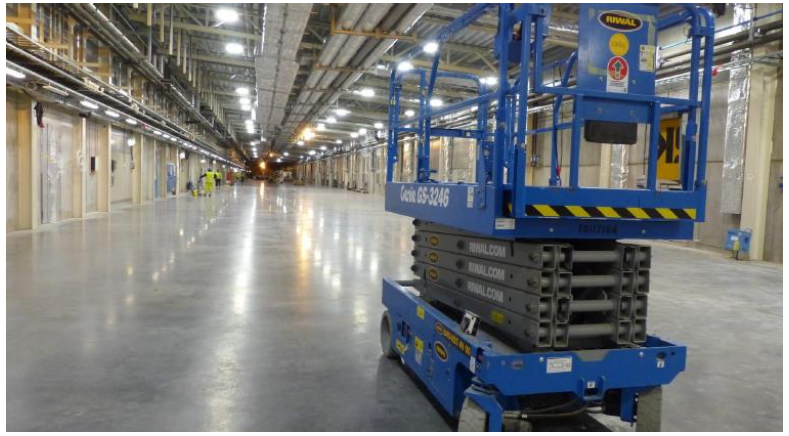

Tunnel before installations

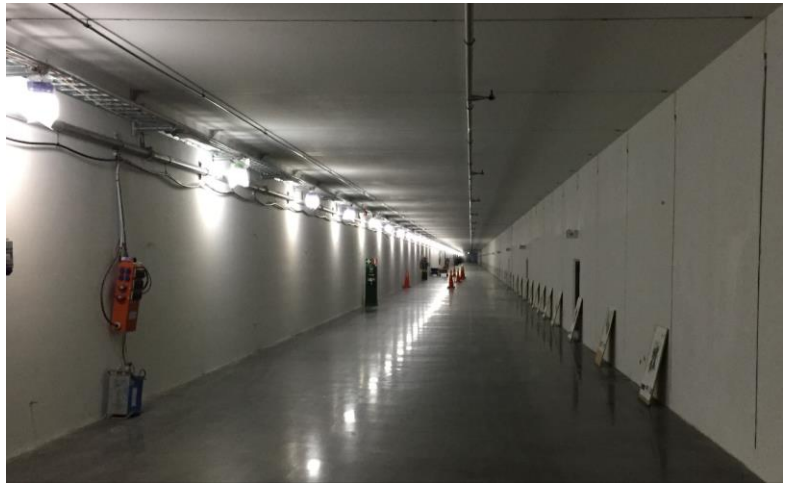

Directional Couplers

- Directional coupler with adjustable coupling factor, the same @ both 352 MHz and 704 MHz
- Minimized number of coupling factors along the tunnel

Design by the Space Forest company

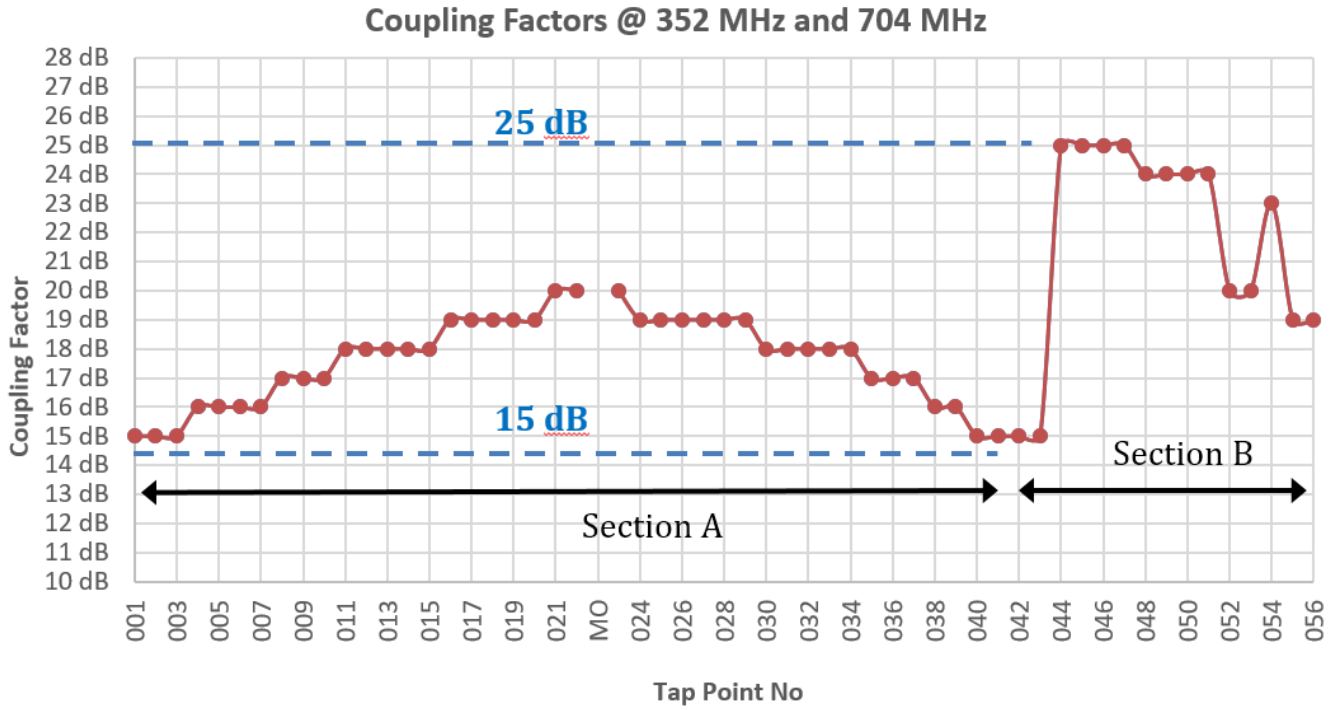

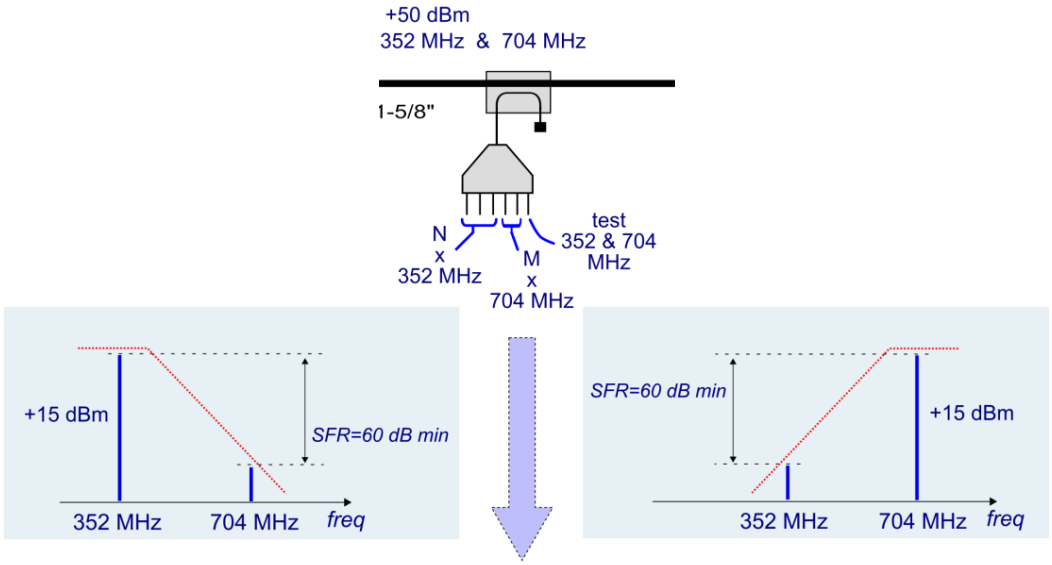

Main Line Design

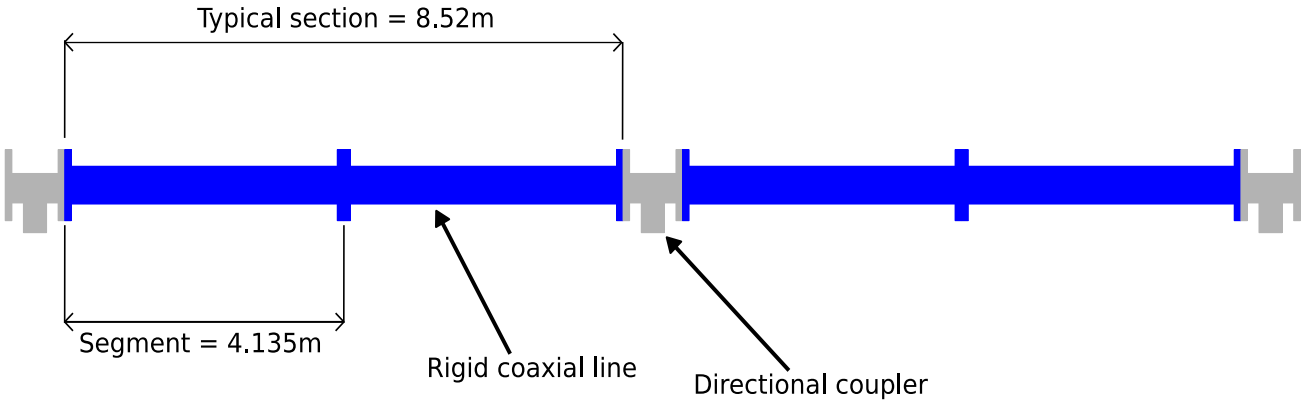

No of 4.135m segments in section	No. of sections	Total no of segments	Total segment length [m]
2	37	74	305,990
3	3	9	37,215
4	7	28	115,780
5	2	10	41,350
6	2	12	49,620
	51	133	549,955
Irregular segments	5		38,700

- Modular design to simplify production and assembly
- Minimized of number of various segment types
- Teflon free line supports
- Gas tight system

PRL Prototype Built in WUT

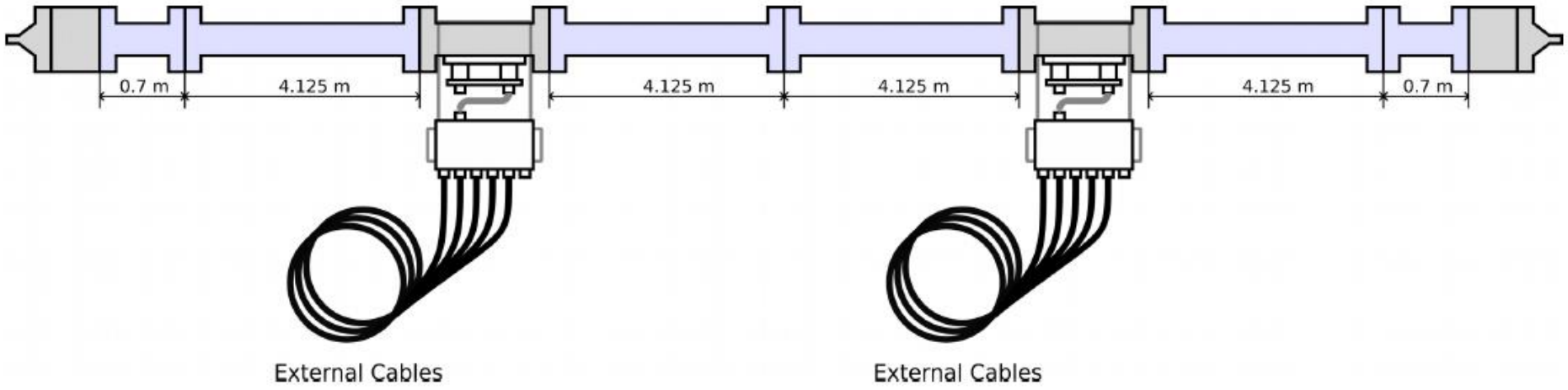

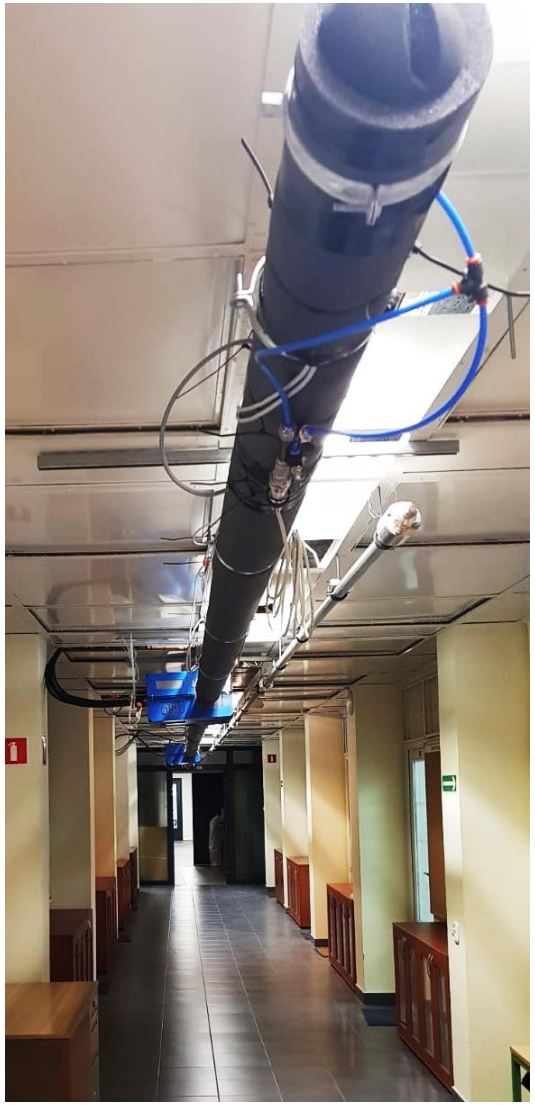

- 18,7 meter long
- Temperature and pressure control system
- Tap Point with external coaxial cables
- Used to prove the concept and optimize production and installation

PRL Prototype Test Results @704 MHz

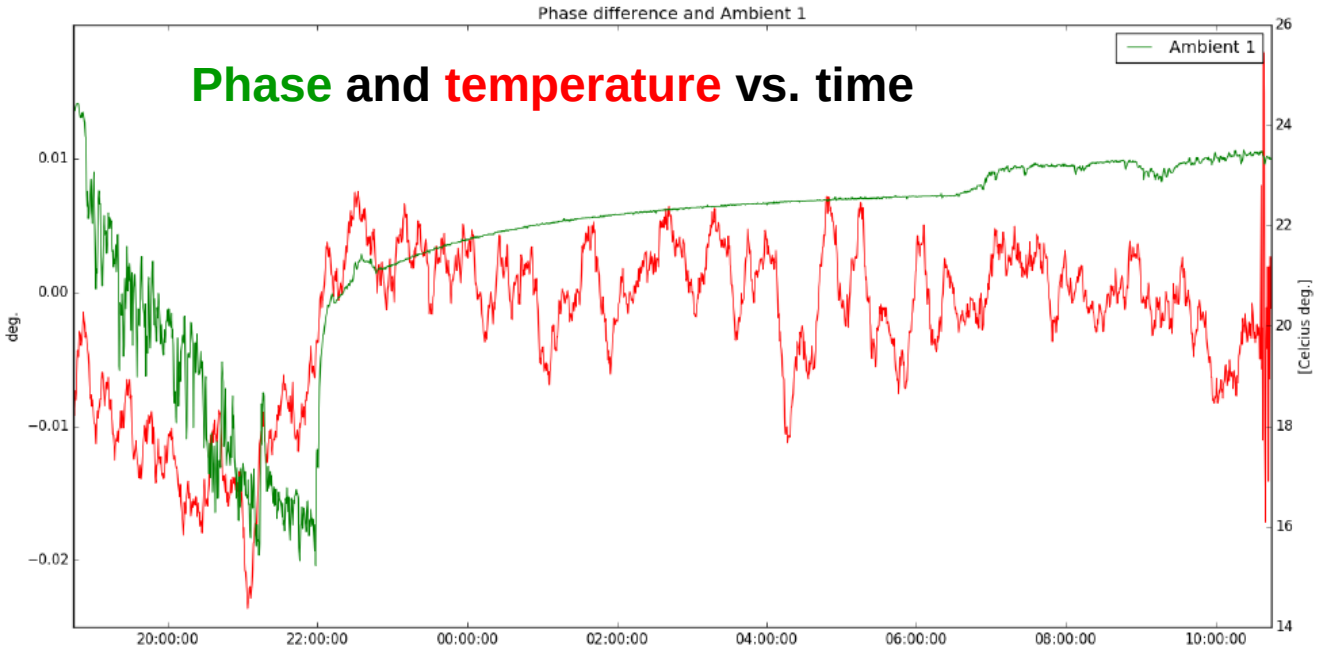

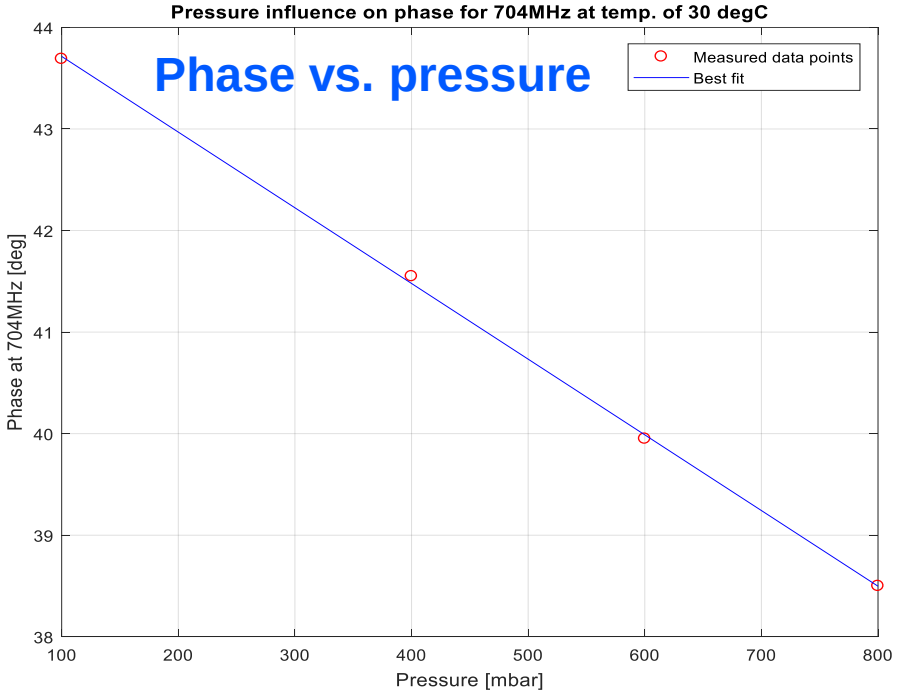

- 7.5 °C temperature change
- 0.04 ° phase change
- 37.4 m of round-trip line length
- Estimated ~0.09 °/°C change for 600m

- 700 mbar pressure change
- ~5 ° phase change for 37.4 m
- Estimated ~0.11 °/mbar for 600 m
- Need to stabilize pressure to 5 mbar

PRL Input Section

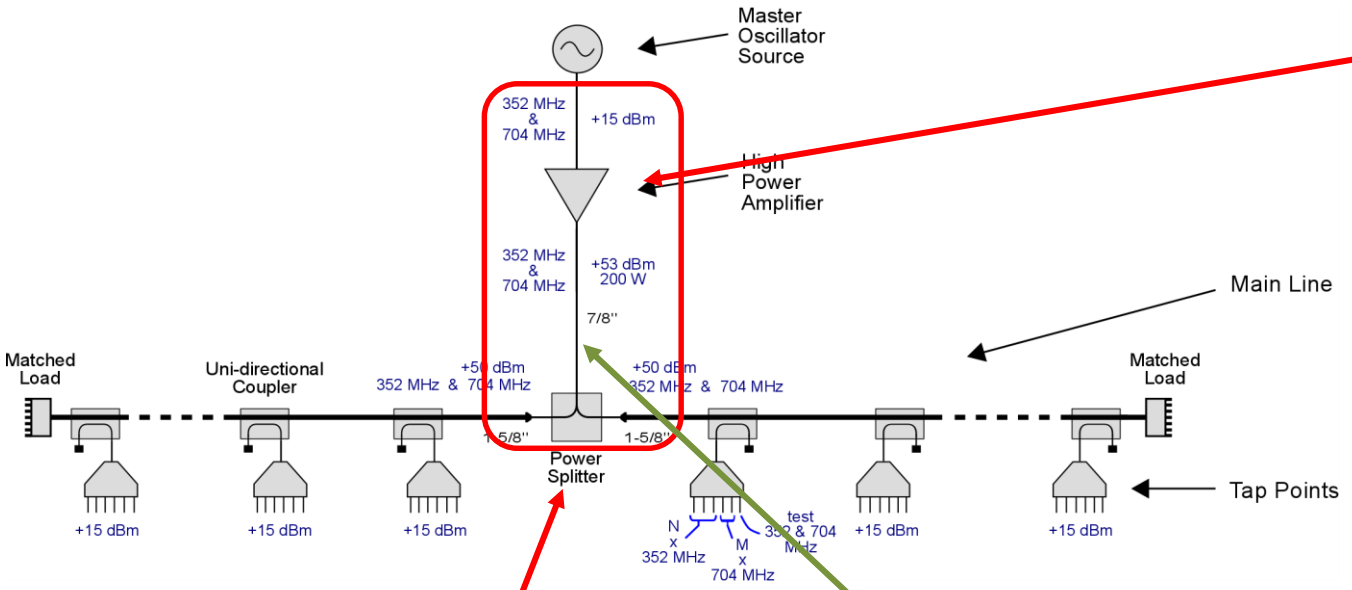

High power (~200W) broad band amplifier system under final tests WUT (**successful**)

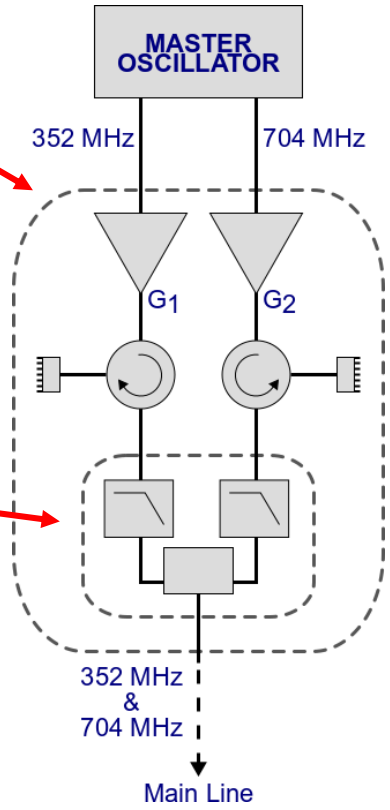

Bandpass combiner designed and produced

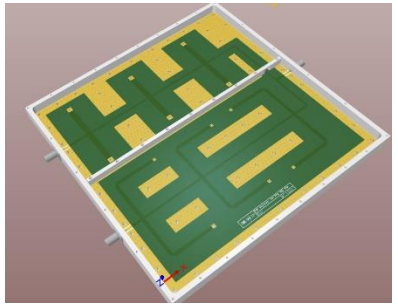

Input power splitter delivered by the Space Forest company

- ~40 m of cable in not stabilized STUB environment
- Precise, active phase stabilization under development

Link from Master Oscillator to the Tunnel – Active Phase Control

- 2 independent active phase control loops (@ 352 MHz and 704 MHz) applied to one RF cable
- Tested prototype -> very good results

Poster by D. Sikora

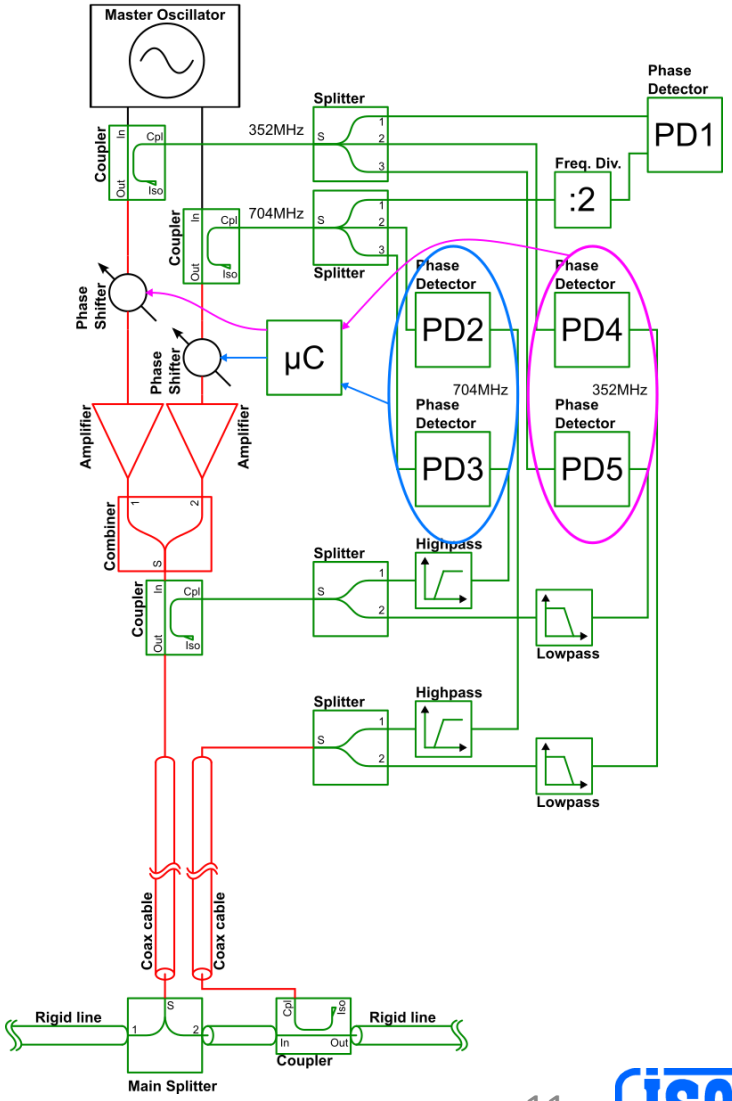

Main Input Power Splitter

- Manufactured.
- Passed detailed RF and temperature control tests.
- Installed in ESS

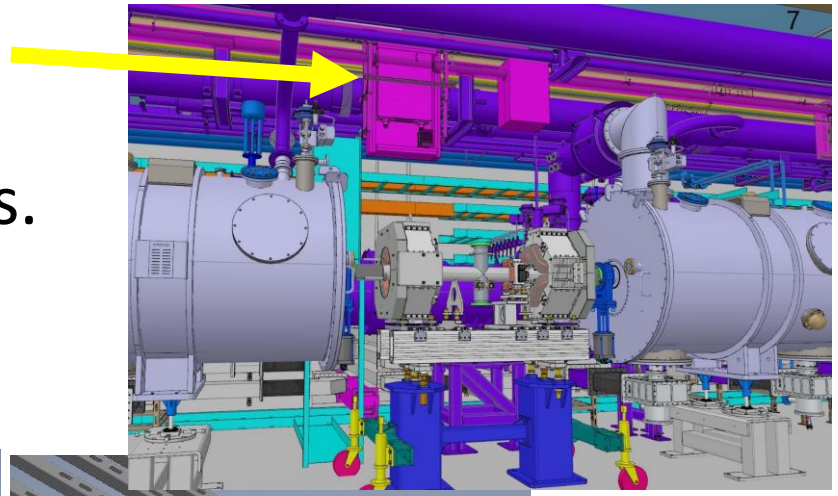

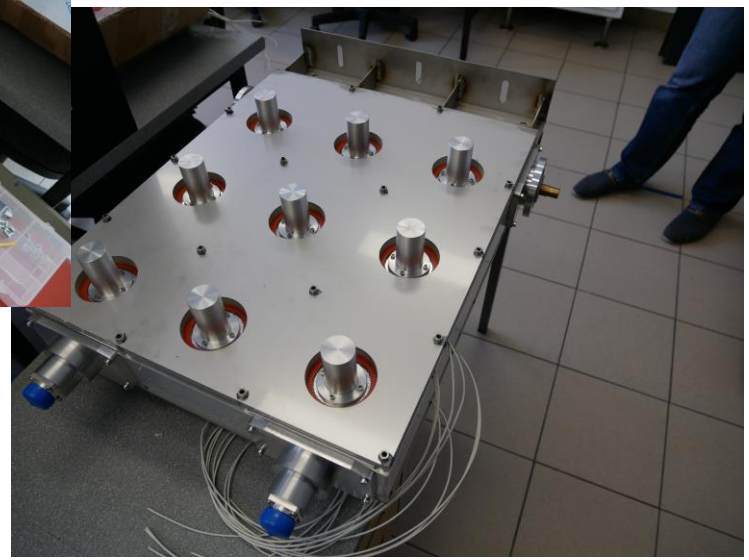

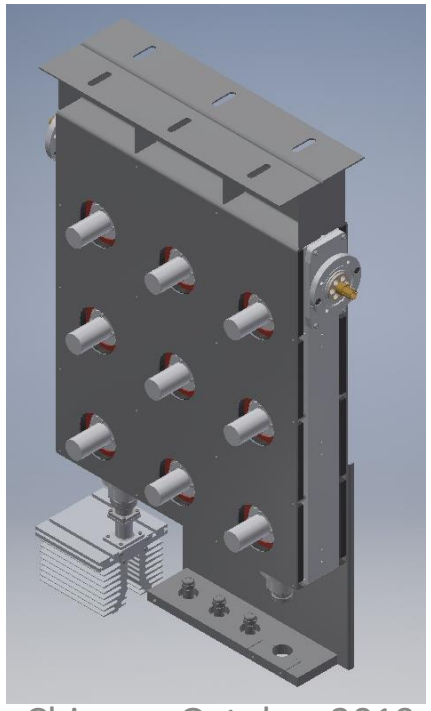

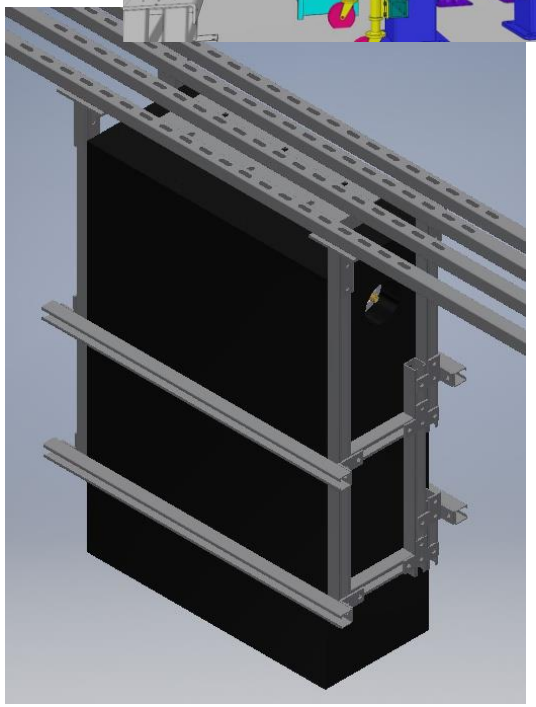

Tap Point

1. Coaxial directional coupler and PRL Split Box
2. Temperature stabilization (+/- 0.1 ^{o}C)
3. Complex mechanics for temperature stab. and mechanical stress relief

Poster by M. Żukociński

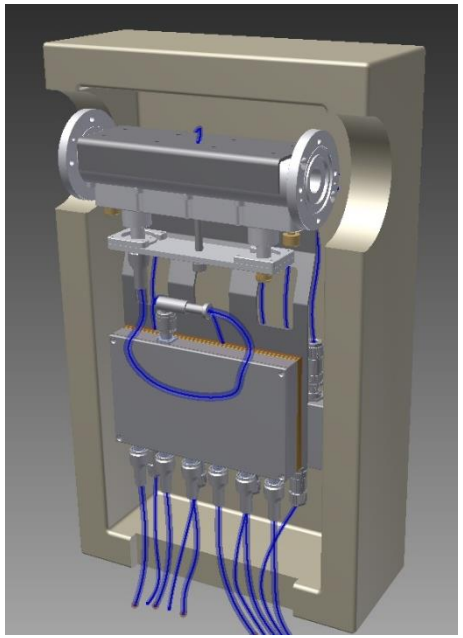
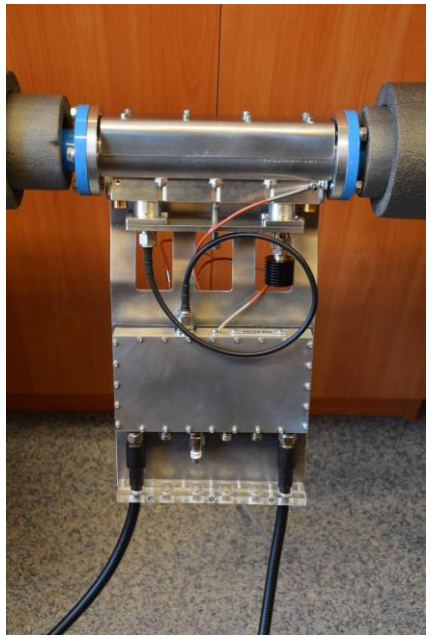
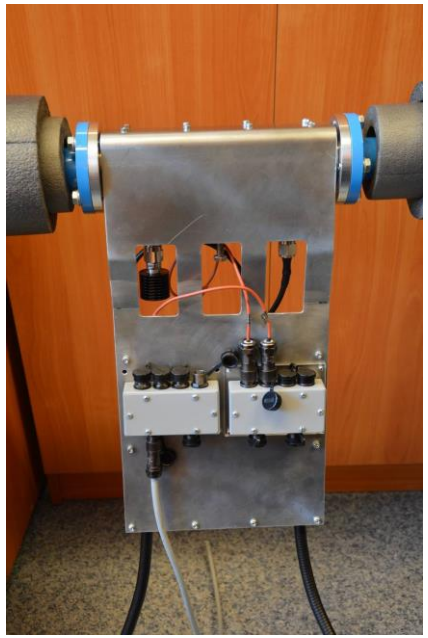
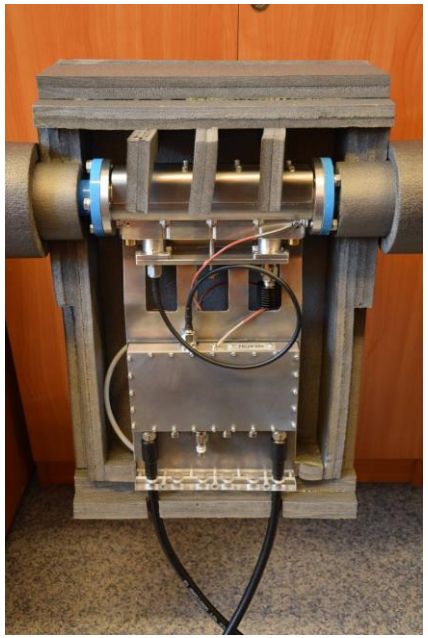


PRL Split Box for TapPoints

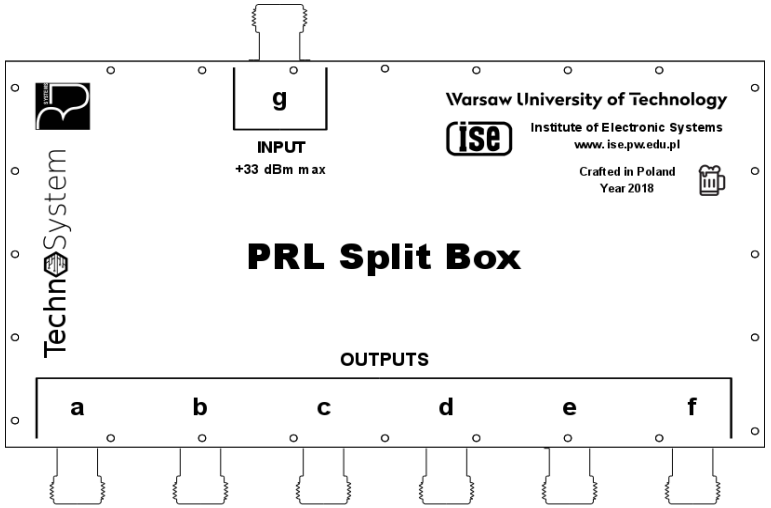

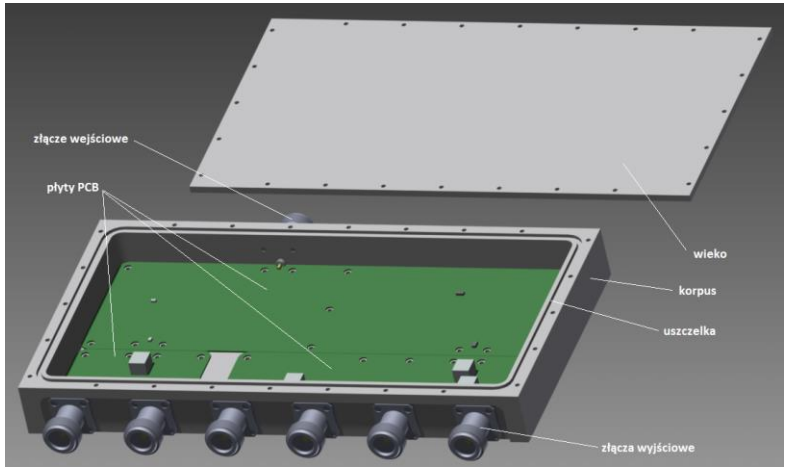

- Complex passive (RF diplexer + power splitter) structure allowing for flexible configuration of output frequencies for up to 6 outputs
- 60 pieces produced

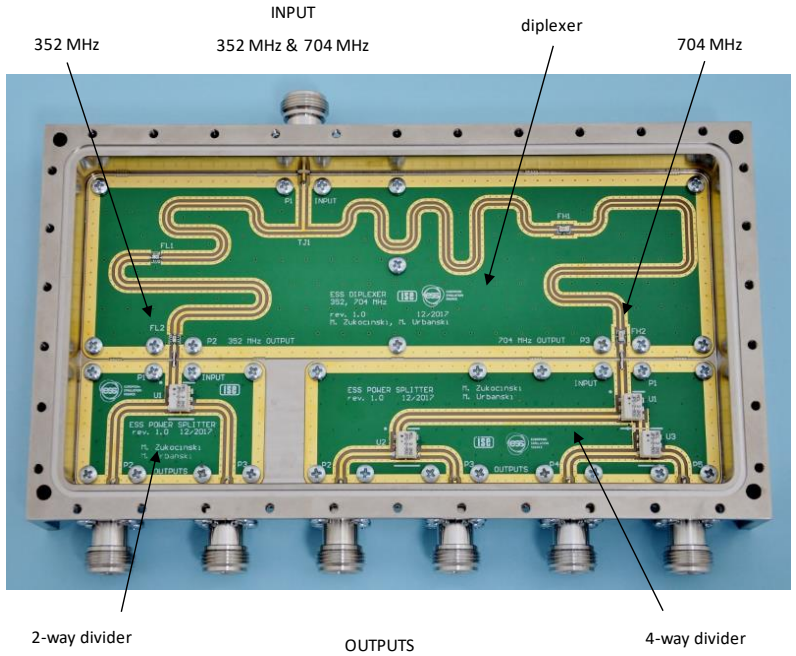

RF Split Box	assembly configuration (PCBs)	a	b	c	d	e	f
RF Split Box-001	4+2	LLRF 352 MHz	LLRF 352 MHz	LLRF 352 MHz	spare 352 MHz	BPM 704 MHz	BPM 704 MHz
RF Split Box-002	2+4	LLRF 352 MHz	LBM 352 MHz	spare 704 MHz	spare 704 MHz	BPM 704 MHz	BPM 704 MHz
RF Split Box-003	2+4	LLRF 352 MHz	spare 352 MHz	spare 704 MHz	BPM 704 MHz	BPM 704 MHz	BPM 704 MHz
RF Split Box-004	1+1	LLRF 352 MHz	X	X	X	BPM 704 MHz	X
RF Split Box-005	1+1	LLRF 352 MHz	X	X	X	BPM 704 MHz	X
RF Split Box-006	1+1	LLRF 352 MHz	X	X	X	BPM 704 MHz	X
RF Split Box-007	1+1	LLRF 352 MHz	X	X	X	BPM 704 MHz	X
RF Split Box-008	1+1	LBM 352 MHz	X	X	X	BPM 704 MHz	X
RF Split Box-009	4+2	LLRF 352 MHz	LLRF 352 MHz	LLRF 352 MHz	LLRF 352 MHz	spare 704 MHz	BPM 704 MHz
RF Split Box-010	4+2	LLRF 352 MHz	LLRF 352 MHz	LLRF 352 MHz	LLRF 352 MHz	spare 704 MHz	BPM 704 MHz
RF Split Box-011	4+2	LLRF 352 MHz	LLRF 352 MHz	LLRF 352 MHz	LLRF 352 MHz	spare 704 MHz	BPM 704 MHz
RF Split Box-012	4+2	LLRF 352 MHz	LLRF 352 MHz	LLRF 352 MHz	LLRF 352 MHz	spare 704 MHz	BPM 704 MHz
RF Split Box-013	4+2	LLRF 352 MHz	LLRF 352 MHz	LLRF 352 MHz	LLRF 352 MHz	spare 704 MHz	BPM 704 MHz
RF Split Box-014	4+2	LLRF 352 MHz	LLRF 352 MHz	LLRF 352 MHz	LLRF 352 MHz	spare 704 MHz	BPM 704 MHz
RF Split Box-015	4+1	LLRF 352 MHz	LLRF 352 MHz	LBM 352 MHz	spare 352 MHz	spare 704 MHz	X
.....	.....	.....	.....	.....	.....	.....	.....

Tap Point production

- 60 pieces produced incl. 130 J-Boxes and ~3000 connectors
- Installation in the ESS tunel in progres
- Significant logistic and quality control challenge

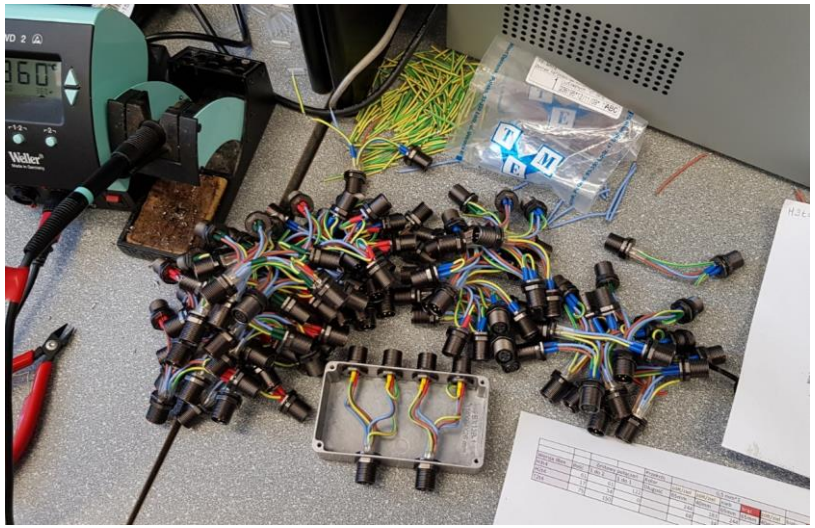

Temperature Control System

- Regulation to +/- 0.1 °C, 600 m line + 58 Tap Points!
- Based on industrial controllers (> 150 loops)
- Concept successfully tested in PRL prototype at WUT
- Crates in production (17 pieces)
- A lot of logistics, tests and quality control needed (over 6000 internal cable connections …)
- Still a lot of work with ICS needed (running 150 control loops + EPICS interface in ESS)

Device Inventory and STUB Cabling

1. Detailed device database + cabling plans
2. Cables for PRL temperature control delivered to ESS (~25 km of the total length)
3. Pulling cables via STUBs in progress since May 2019

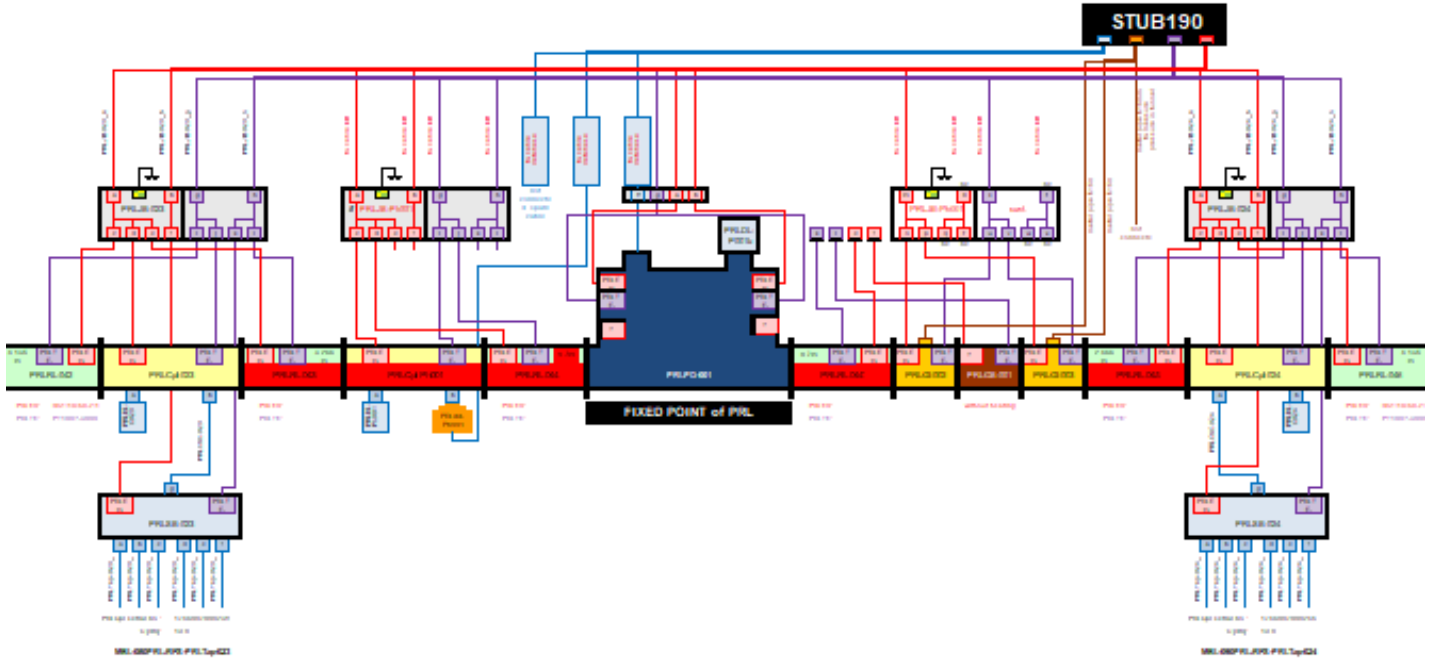

Component Production and Installations in the Tunnel

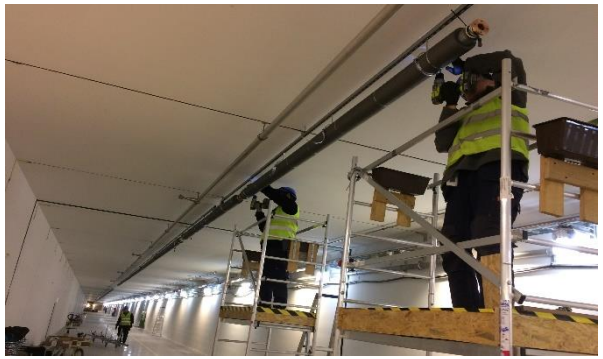

Current Status and Plans

- Installed over 500 m of main line and 30 Tap Points (by now)
- End of main line installation planned for Oct./Nov. 2019
- Temperature control cables pulling in progress
- Waiting for connection to TapPoints after installation of Cryogenics
- Temperature control boxes installation in November/December
- Tests and commissioning by spring 2020

PRL Main Line Installation – Current View

Thank you for attention!

Thanks to all contributors to the system design and installations!

Adam Abramowicz, Jerzy Berliński, Bo Bernhardsson, Łukasz Czuba, Grażyna Fistek, Paweł Jatczak, Morten Jensen, Michał Kalisiak, Mateusz Lipiński, Maria Mielnik, Krzysztof Oliwa, Bjorn Olofsson, Radosław Papis, Dominik Sikora, Anders Sunesson, Maciej Urbański, Wojciech Wierba, Rihua Zeng, Mateusz Żukociński