Precision X-band RF control system.

2019 LLRF Workshop, Chicago

Sept. 29 - Oct. 03, 2019

Matthias Reukauff
Chicago, Oct. 01, 2019

HELMHOLTZ RESEARCH FOR GRAND CHALLENGES

FLASH. Free-Electron Laser FLASH

DESY.

New Cavity: PolariX TDS

- Polarizable X-band Transverse Deflecting Structure
- Resonance frequency: 12 GHz
- → New RF frontend required
- Idea: Reuse existing 3 GHz LLRF system

New Cavity: PolariX TDS

- Polarizable X-band Transverse Deflecting Structure
- Resonance frequency: 12 GHz
- → New RF frontend required
- Idea: Reuse existing 3 GHz LLRF system

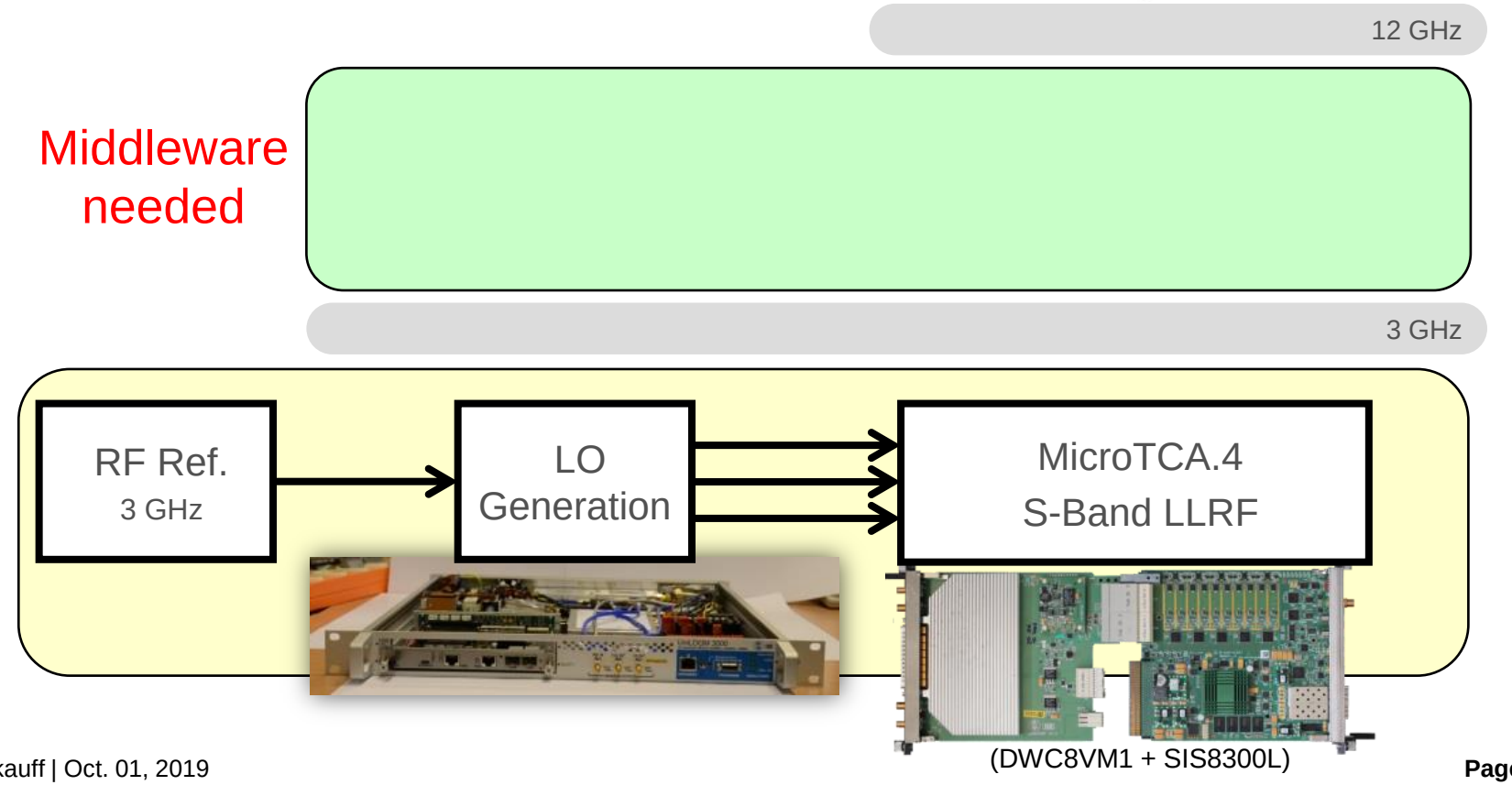

New Cavity: PolariX TDS

- Polarizable X-band Transverse Deflecting Structure
- Resonance frequency: 12 GHz
- → New RF frontend required
- Idea: Reuse existing 3 GHz LLRF system

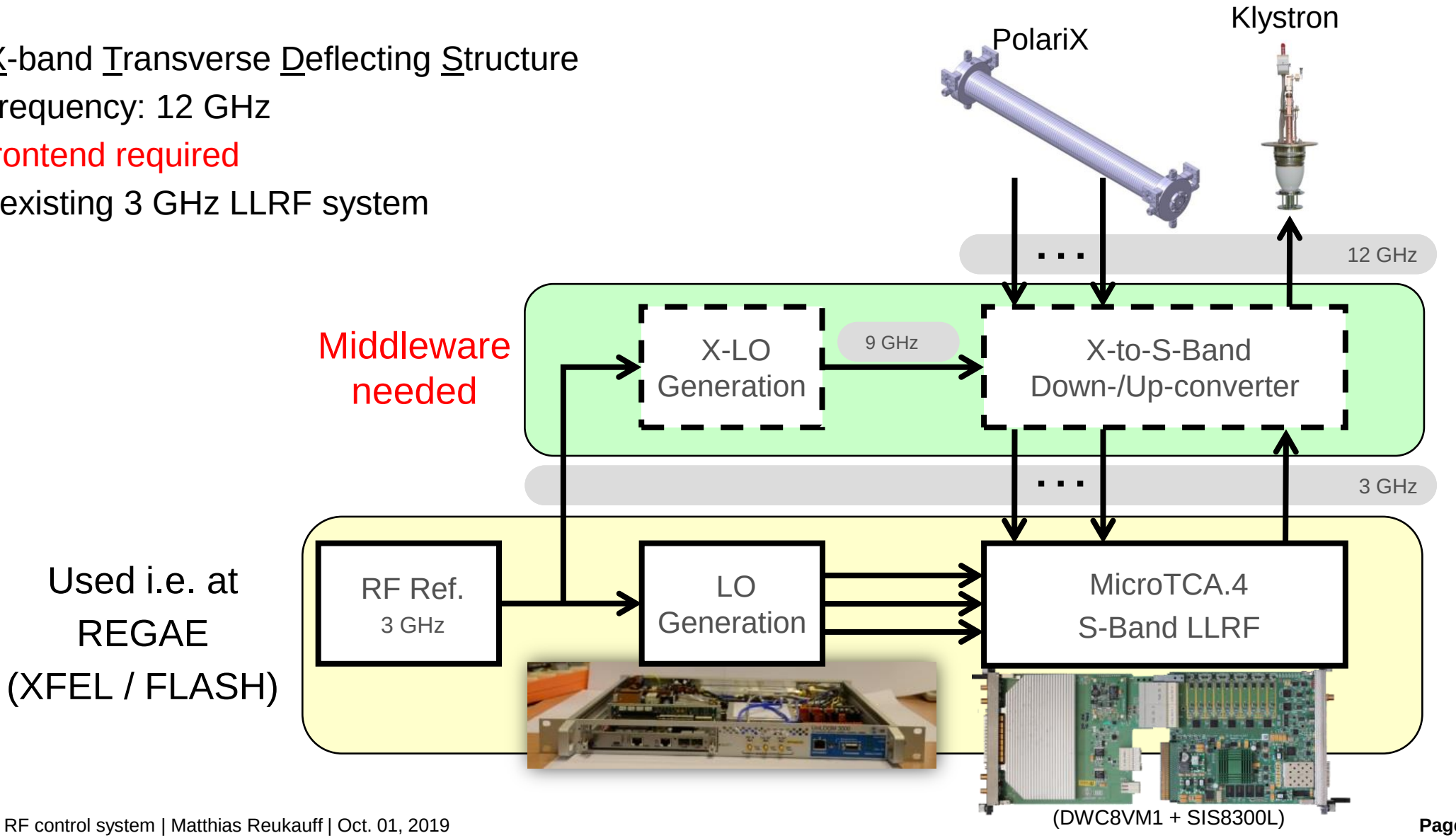

How We Do It

X-band LO Generation Module (XLOGM)

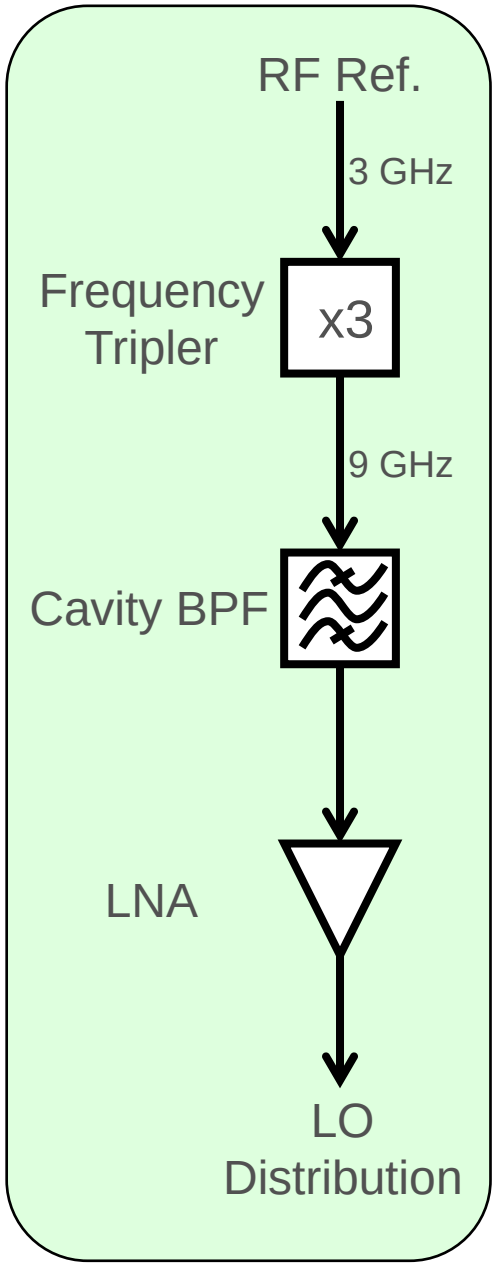

How We Do It

X-band Down-converter Module (XDWCM)

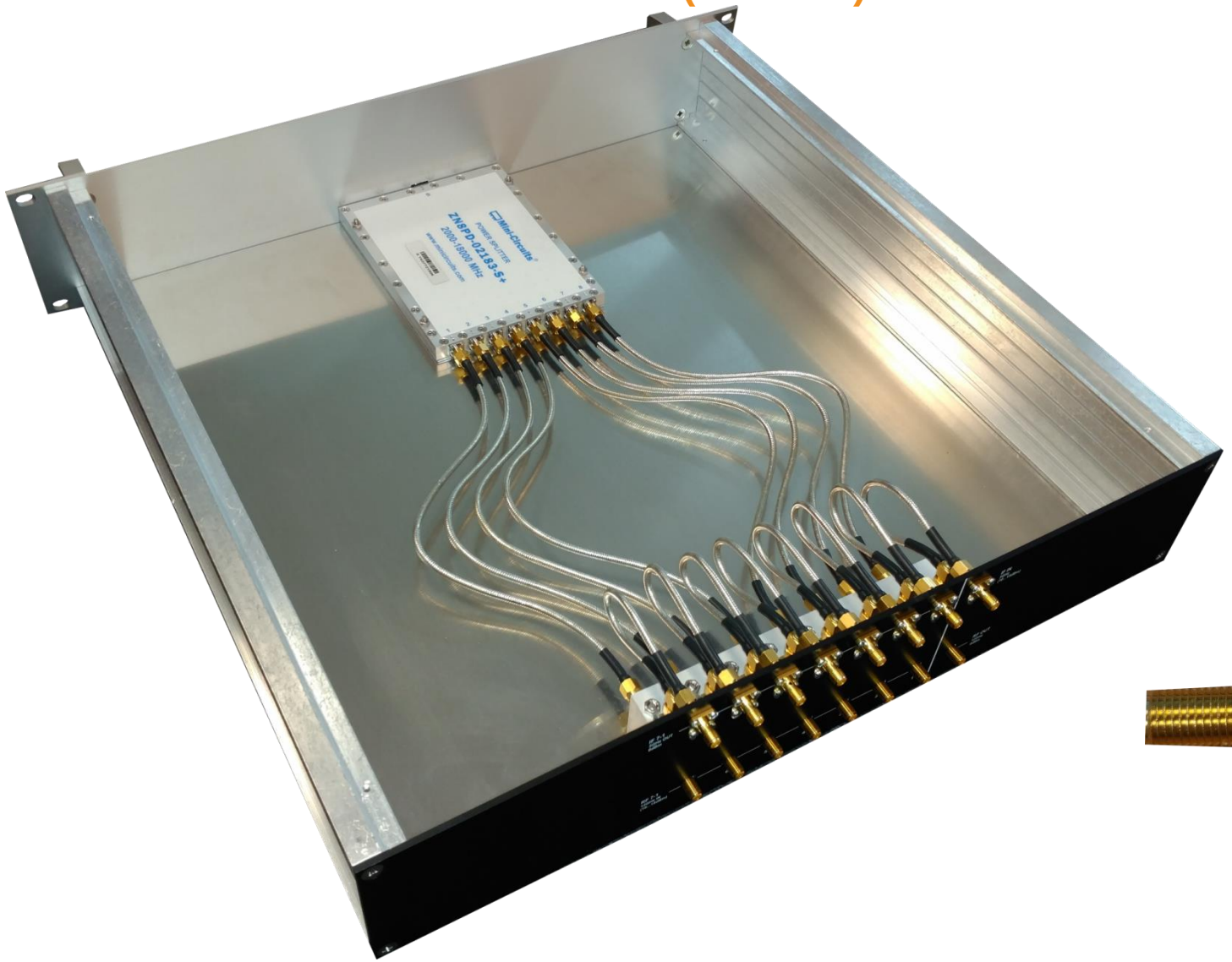

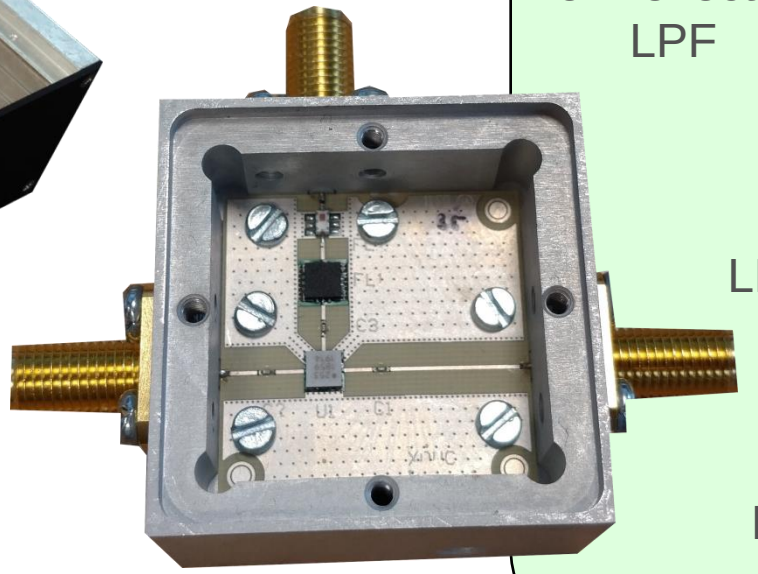

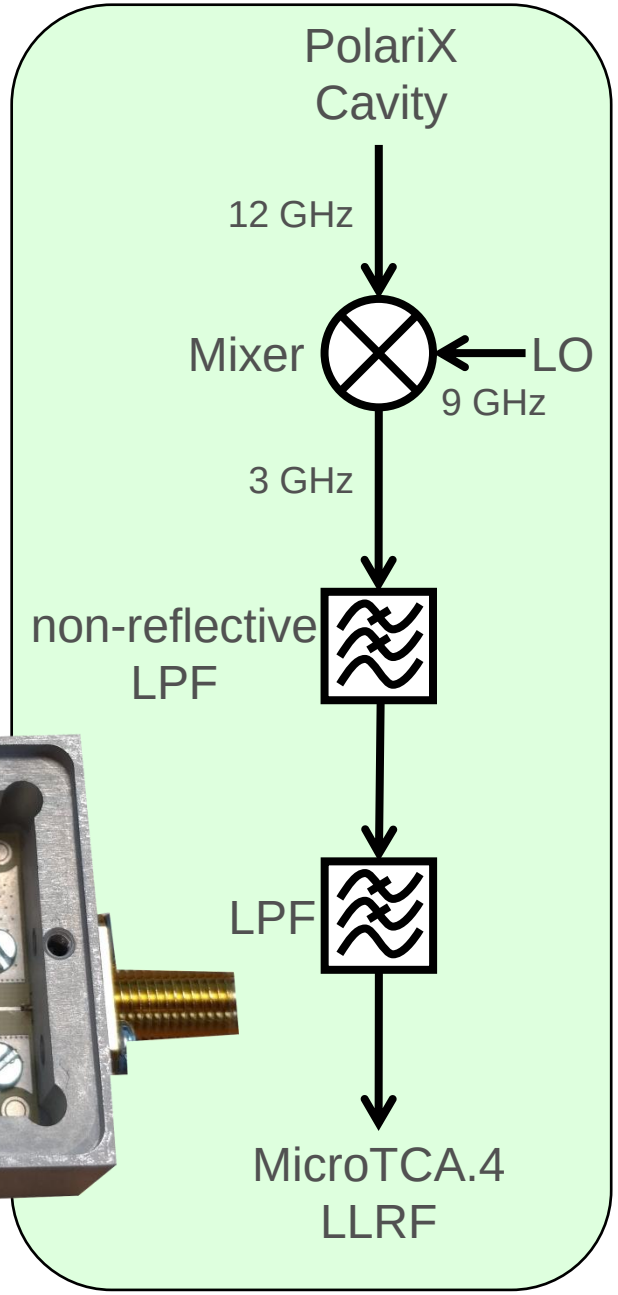

What We Achieve…

… in the lab

X-band LO Generation

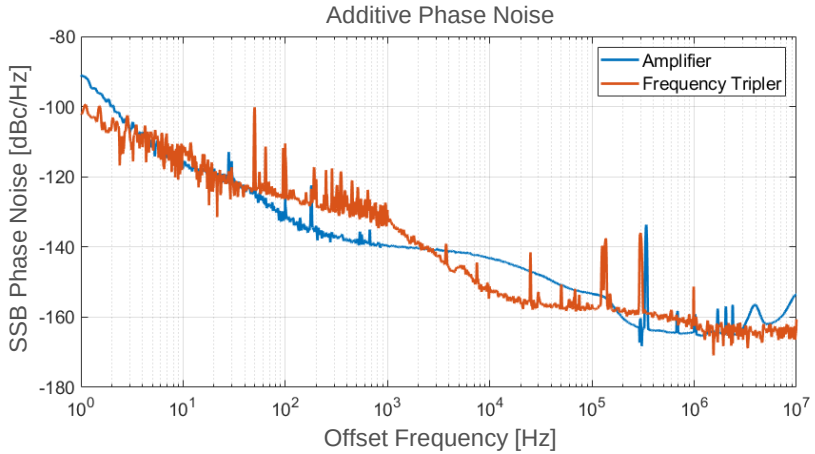

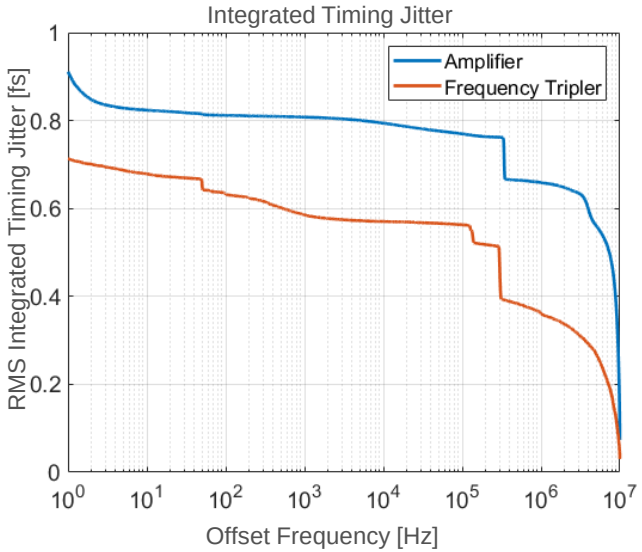

Additive Phase Noise* @ 12 GHz

1 Hz – 10 MHz Bandwidth

Part	Jitter [fs]	Jitter [m°]
Amplifier	0.911	3.94
Tripler	0.713	3.08
XLOG	**1.157**	**5.00**
XDWC	**0.444**	**1.92**
XUPC	**1.123**	**4.85**

*Measured with Rohde & Schwarz FSWP

X-band Converters

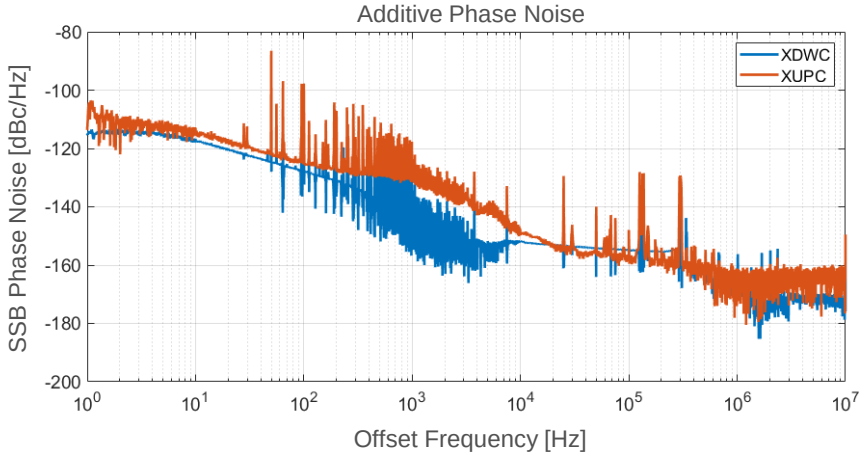

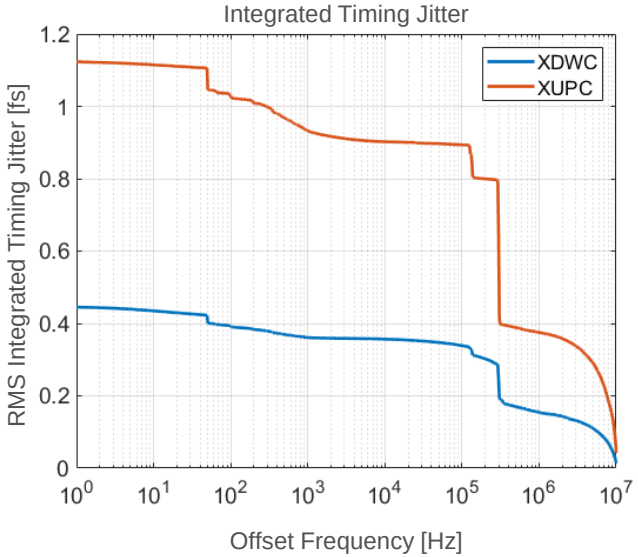

It‘s Already Running!

First streaking on 5th September 2019

Picture removed for public release

Thank you

Contact

DESY. Deutsches Elektronen-Synchrotron

www.desy.de

Matthias Reukauff
MSK
matthias.reukauff@desy.de
+49 40 8998 1978