Estimating key operation parameters for SRF cavities in CW.

Andrea Bellandi, Chicago
1/10/2019
LLRF 2019

Photo: J. Branlard

HELMHOLTZ RESEARCH FOR GRAND CHALLENGES
PIER Partnership of Universität Hamburg and DESY
UHH Universität Hamburg DER FORSCHUNG | DER LEHRE | DER BILDUNG
European XFEL
DESY.

Motivation: European XFEL CW/LP upgrade

Tunnel

1.5km (linac)

5.2m

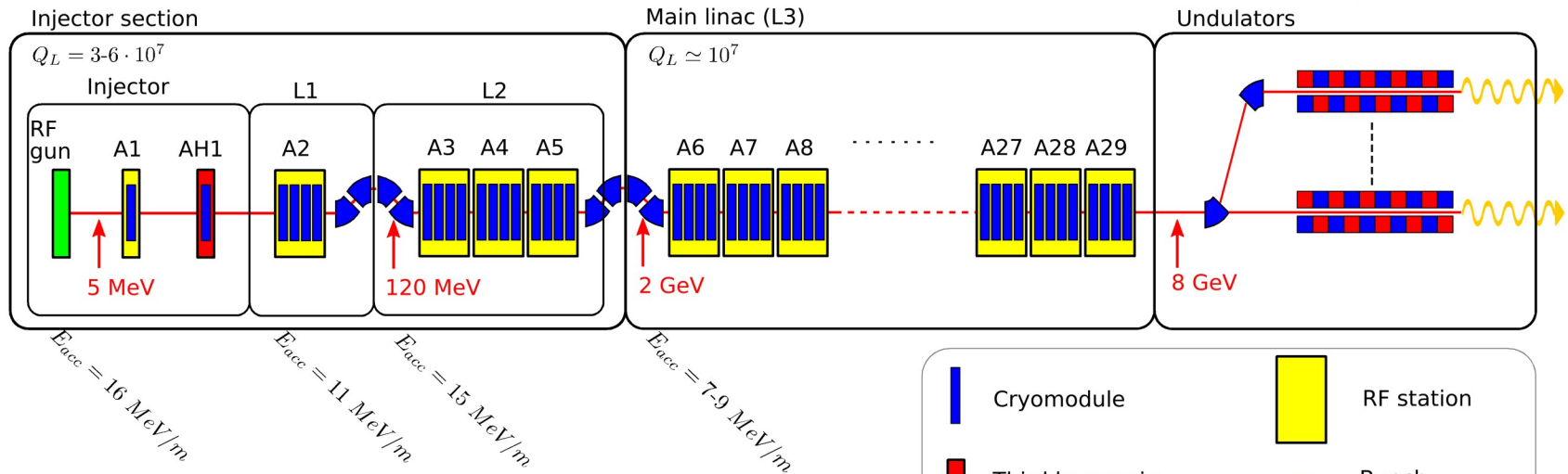

- **Higher max bunch repetition rate (>100kHz) and current up to 0.025 mA**
- **Higher bunch spacing is beneficial for many FEL experiments**
- **Bunch repetition rate and spacing can be traded for beam energy for more flexible operations. Need to keep SP with CW/LP**

Modes of operation

NEW

Continuous wave (CW)	E = 8.6 GeV $N_{bunches}$/s = 100k
Long Pulse (LP)	E = 12.8 GeV $N_{bunches}$/s = 50k
Short Pulse (SP)	E = 17.5 GeV $N_{bunches}$/s = 27k

LLRF challenges: detuning and quench detection

Proposed LLRF extension

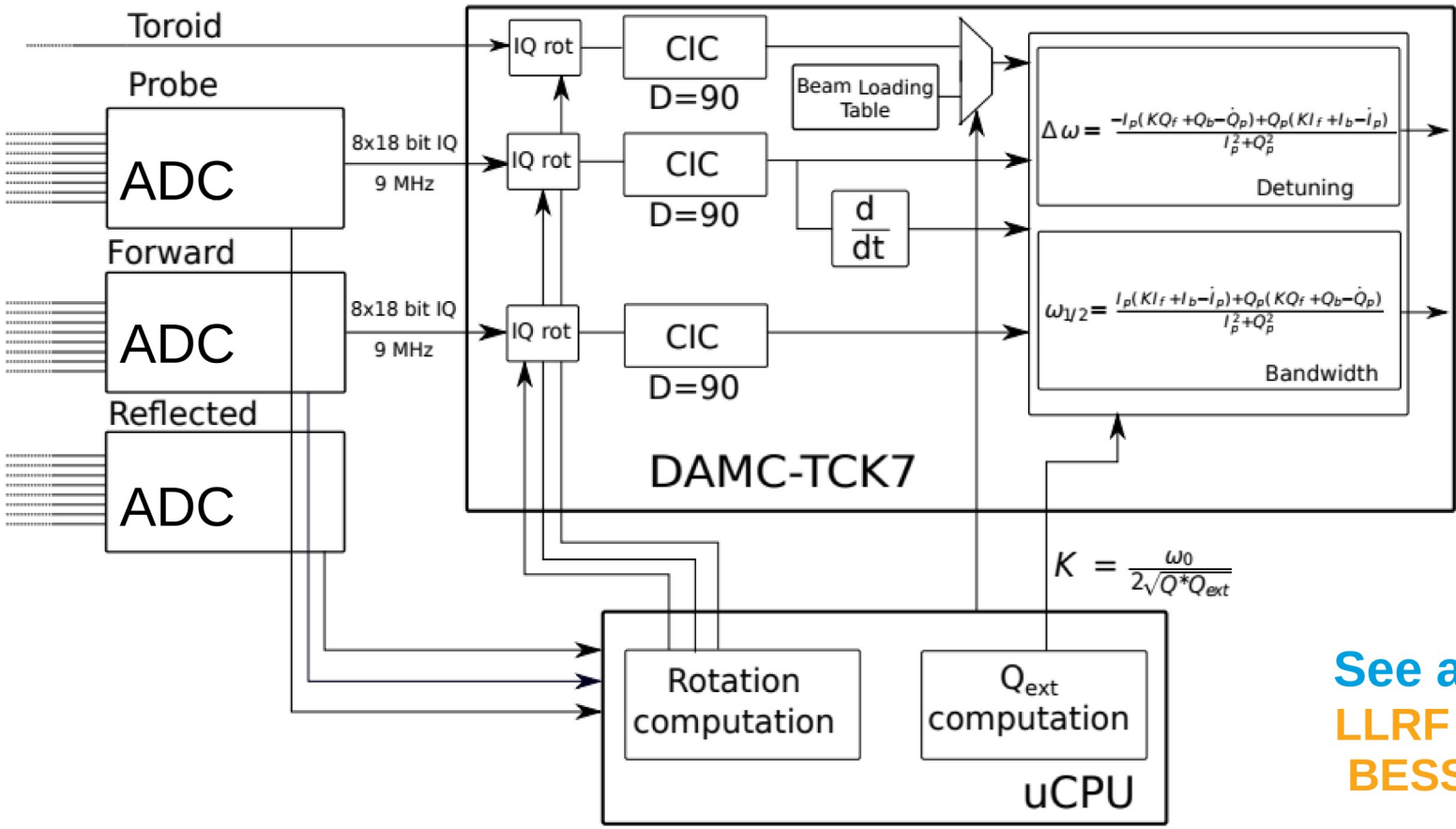

- LLRF Based on MicroTCA.4
- The RF signals are sent to the DAMC-TCK7 at a rate of 9MHz
- The derivation operation requires the removal of high frequency noise
- Uses Cascated Integrator-Comb decimator filter. The decimated signal has a rate of 100 kHz
- The detuning is needed for the active cancellation of the noise
- Added benefit: working with slower signals is (generally) easier

See also:
LLRF control operational aspects of the BESSY-VSR upgrade.

LLRF challenges: coupler heating

Power in function of loaded Q

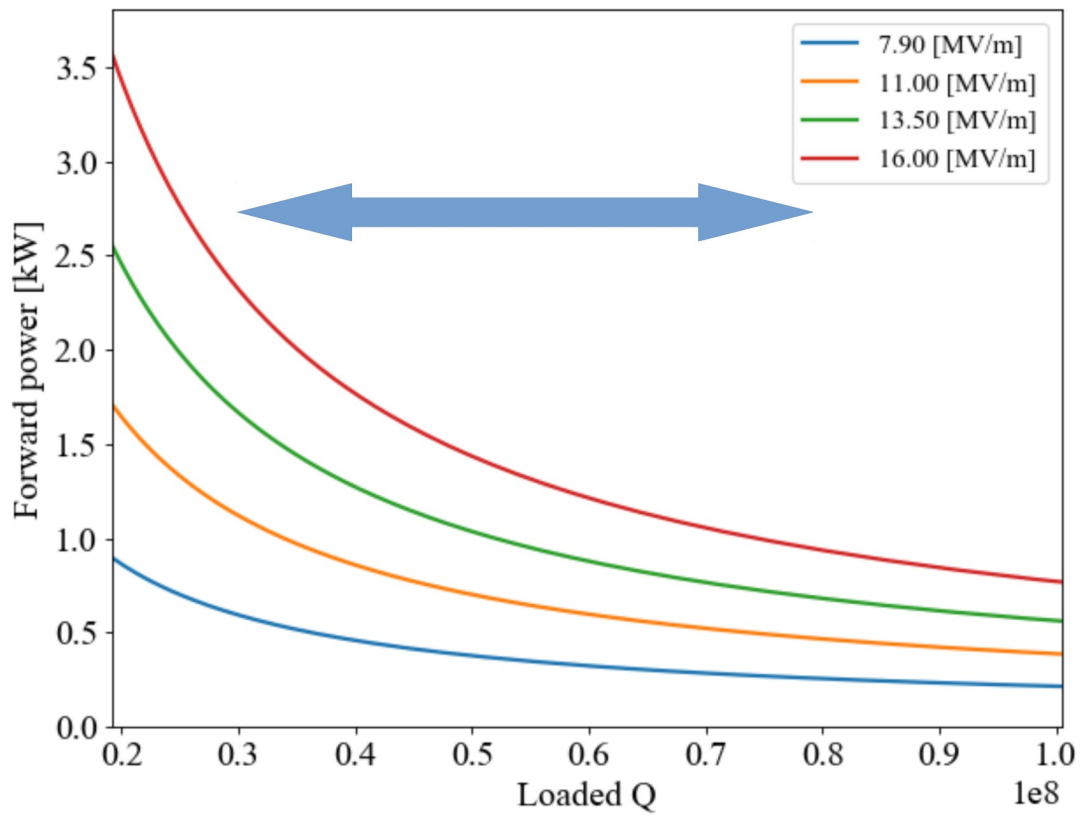

At 16MV/m the average forward power is more than 1kW!

LLRF challenges: coupler heating

Power in function of loaded Q

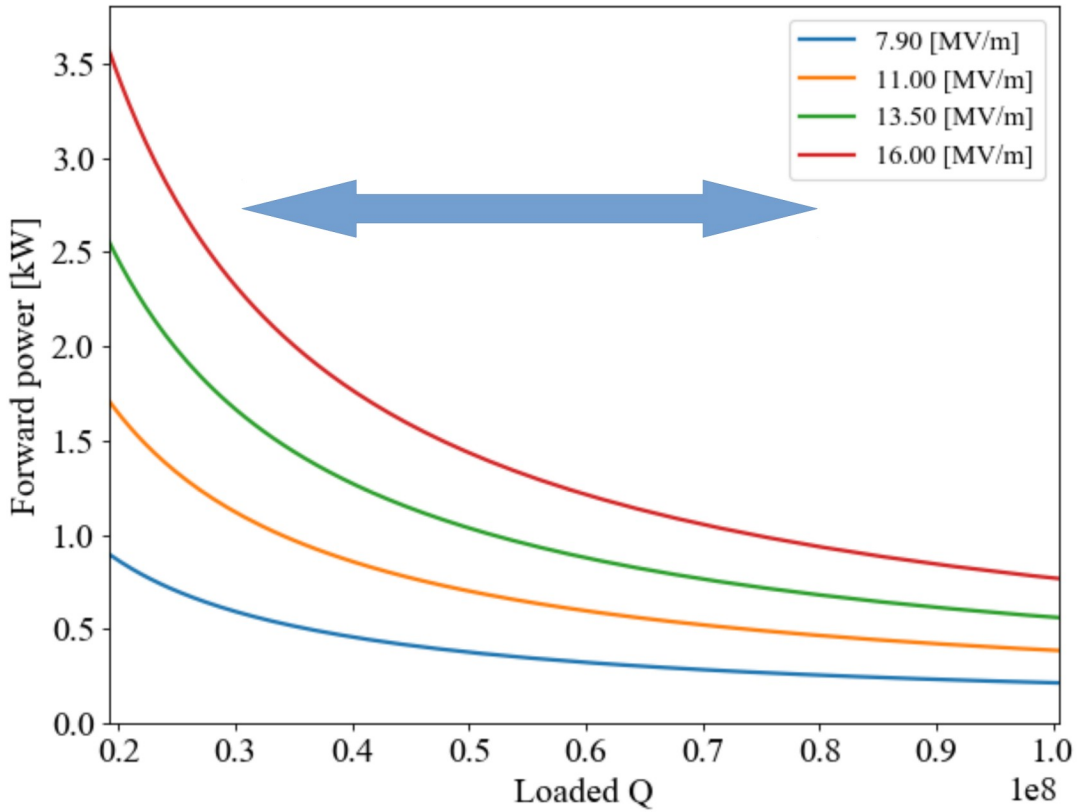

Variation of loaded Q due to coupler heating

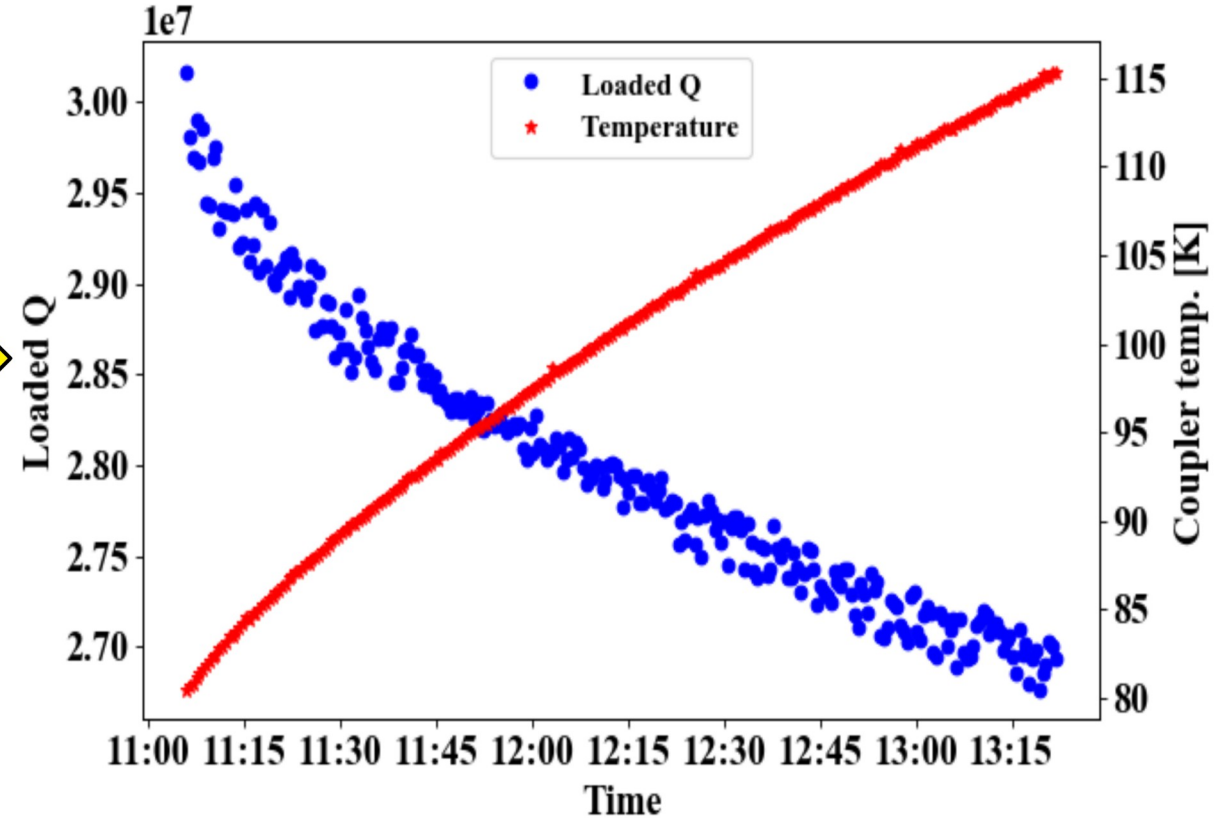

At 16MV/m the average forward power is more than 1kW!

Couplers heat up and become longer and the loaded Q decreases.

LLRF challenges: coupler heating

Transmission line representation of the cavity system

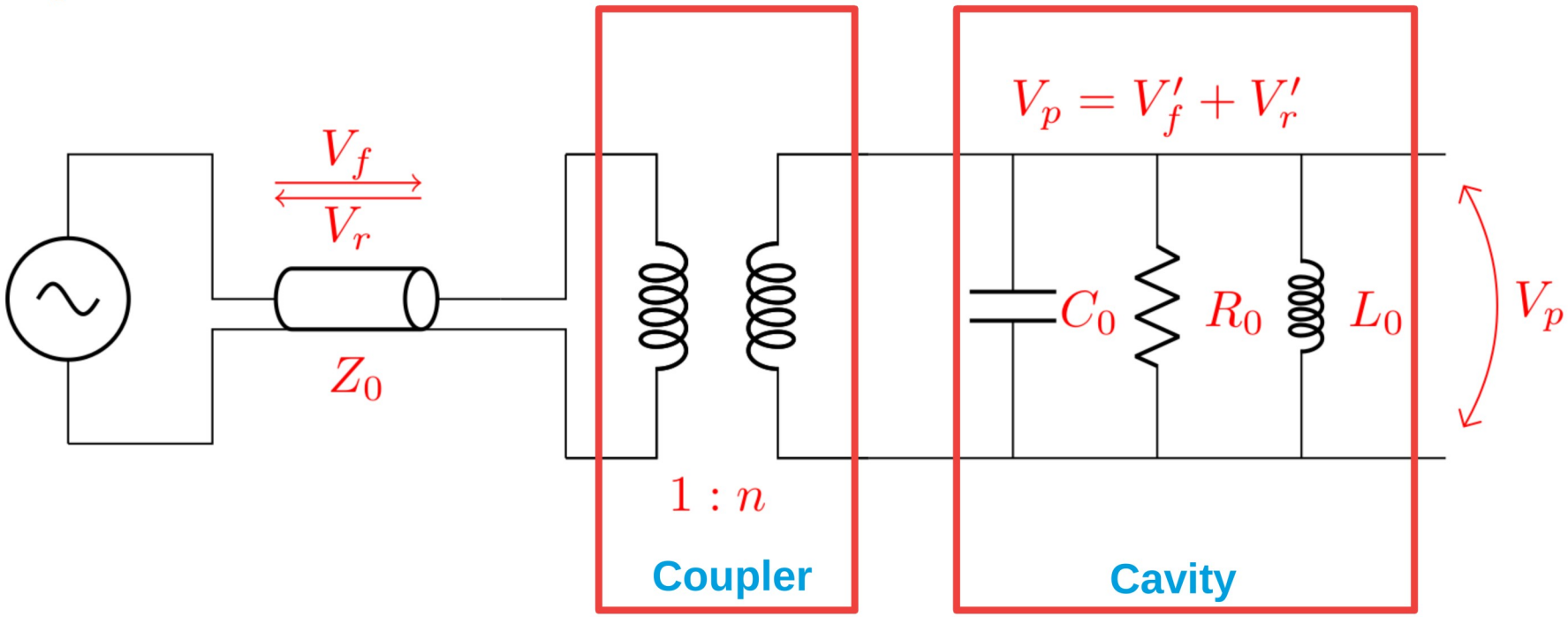

Assumptions:

- The coupler is represented by the transformer
- The transformer ratio changes due heating
- The probe calibration is unaffected by coupler heating

$$Q_{ext} = Q^* \frac{V_p^2}{(V_p)_{virt}^2}$$ with Q^* a calibration factor and $(V_p)_{virt} = V_f + V_r$ the virtual probe

Thank you

..and thanks to:

V.Ayvazyan, S. Barbanotti, J. Branlard, A.Gössel, Ç. Gümüş, F.Mittag, C. Mueller, A.Nawaz, M. Omet, R.Onken, S. Pfeiffer, D.Reschke, H.Schlarb, C. Schmidt,

J. Sekutowicz E.Vogel, V. Vogel, D. Kostin.

Contact

DESY. Deutsches Elektronen-Synchrotron

www.desy.de

Andrea Bellandi
MSK
andrea.bellandi@desy.de

Motivation: European XFEL CW/LP upgrade

Tunnel

1.5km (linac)

5.2m

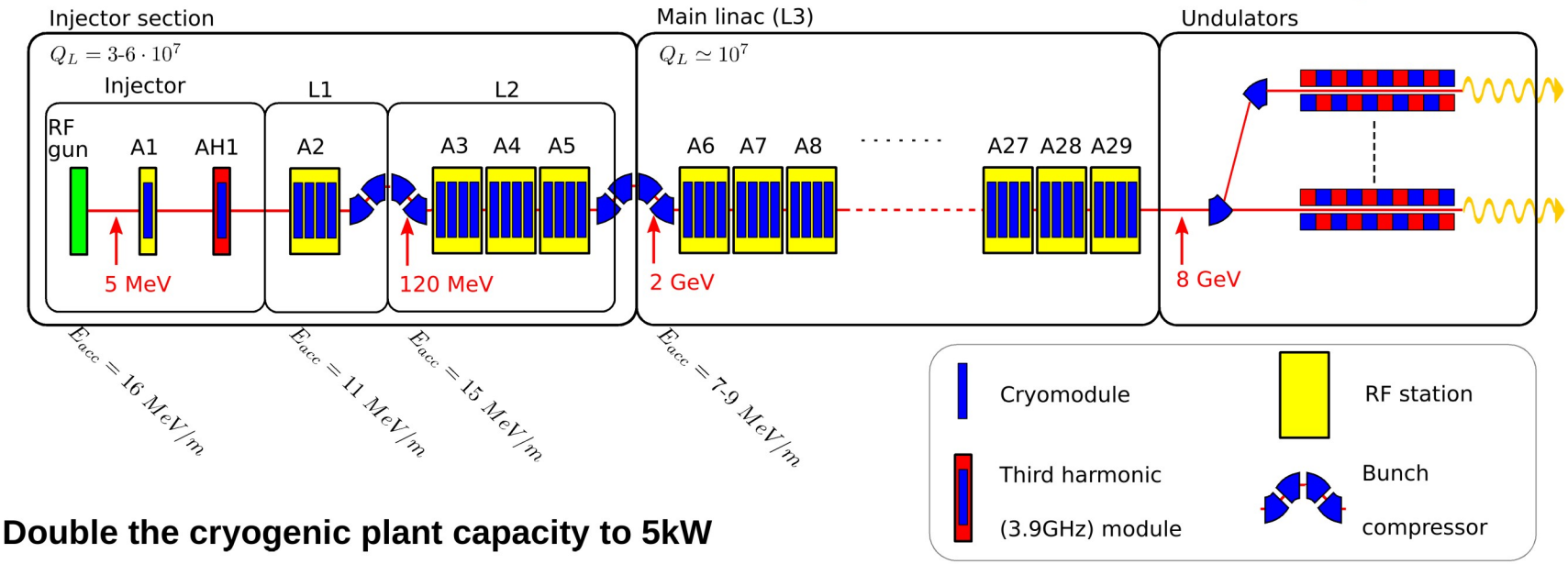

- **Double the cryogenic plant capacity to 5kW**
- **Replace injector cryomodules with higher Q_0 ones (> 2.8 10^{10}). These cryomodules will be able to operate in the range of Q_L ~ 10^6 - 10^8**
- **Install Induction Output Tubes (IOT) with pulsed multi beam klystrons**
- **Modify the RF distribution system to allow selectable SP or CW/LP operations**
- **Add 12 modules to the main linac**

Modes of operation

NEW

Continuous wave (CW)	E = 8.6 GeV $N_{bunches}$/s = 100k
Long Pulse (LP)	E = 12.8 GeV $N_{bunches}$/s = 50k
Short Pulse (SP)	E = 17.5 GeV $N_{bunches}$/s = 27k

LLRF challenges: coupler heating

Power in function of loaded Q

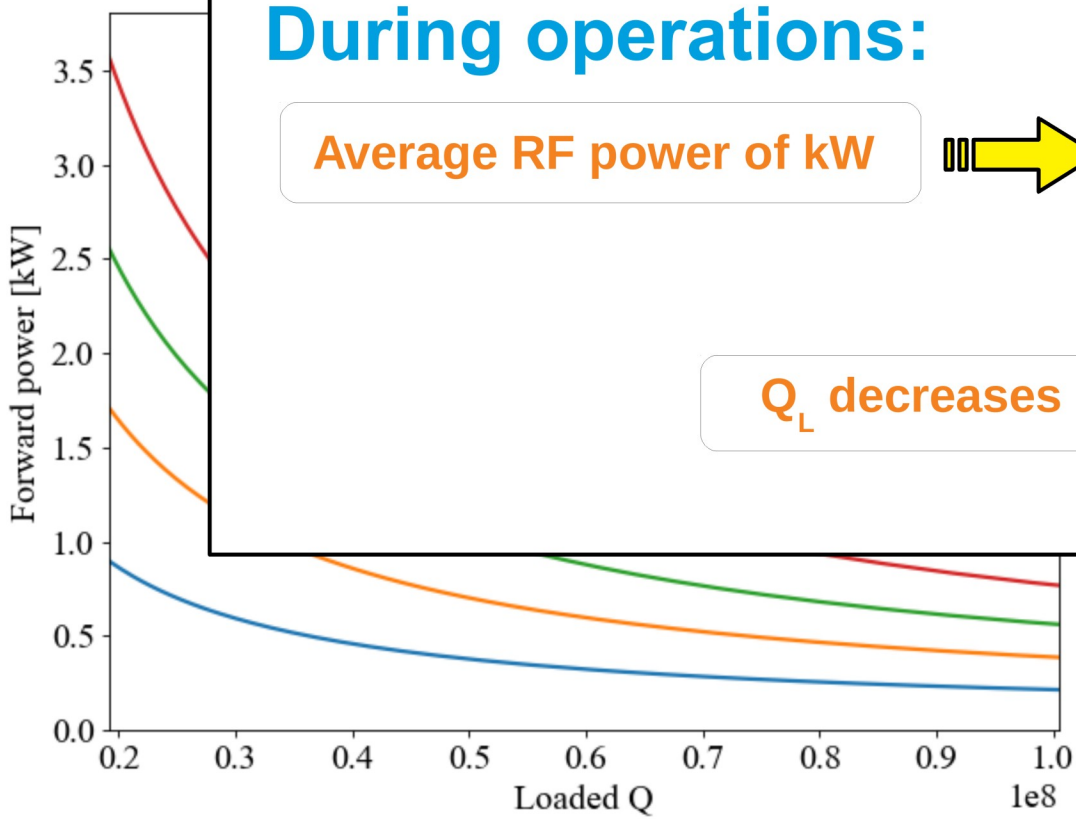

Variation of loaded Q due to coupler heating

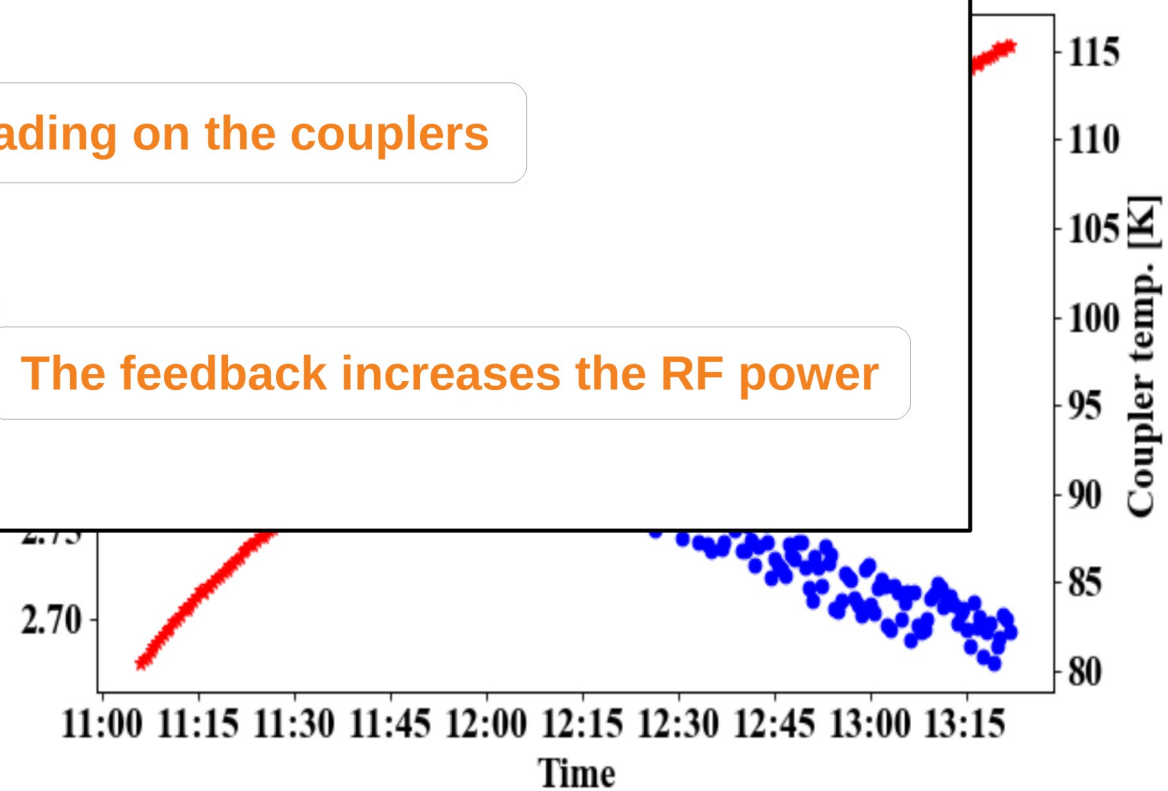

During operations:

Average RF power of kW → Heat loading on the couplers

Q_L decreases → The feedback increases the RF power

At 16MV/m the average forward power is more than 1kW!

Coupler heats up and became longer. The loaded q decreases

LLRF challenges: detuning and quench detection

Computed detuning

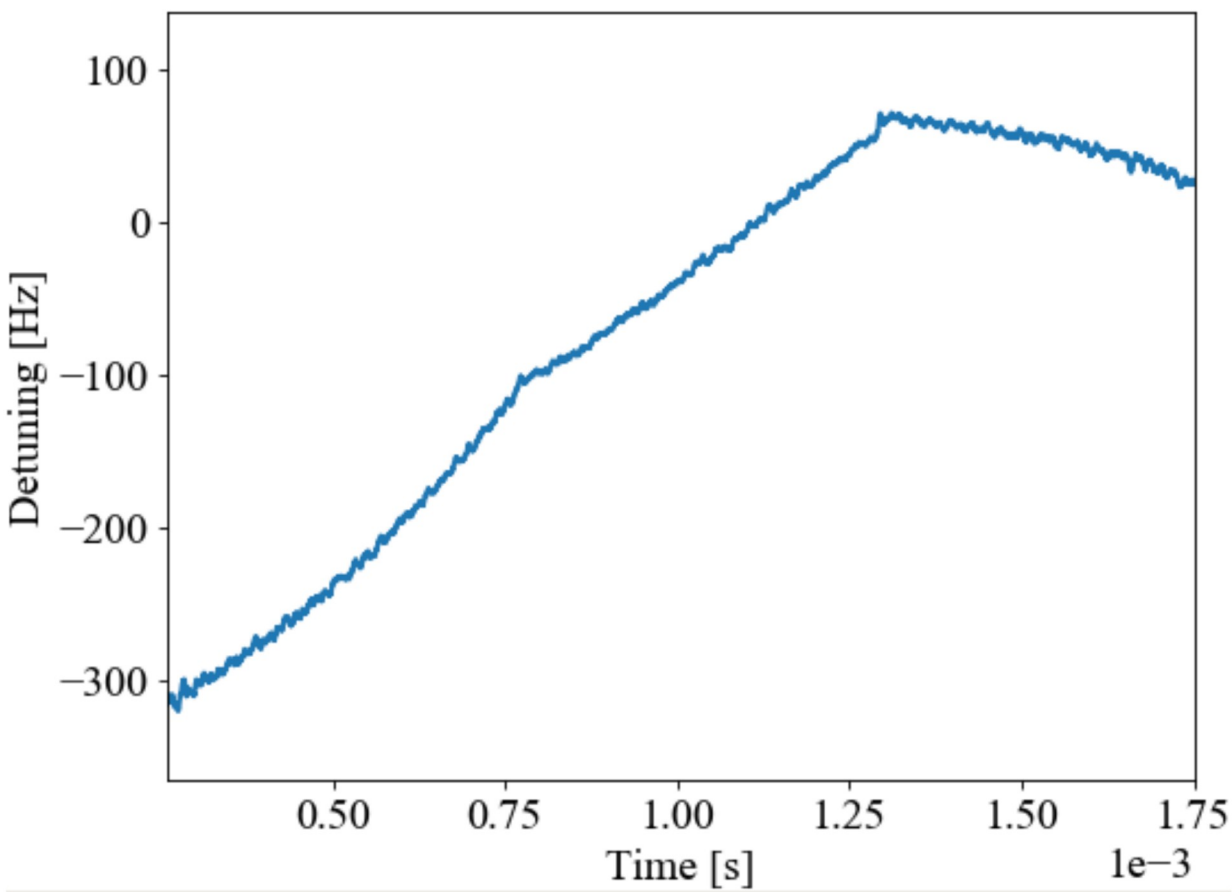

Computed Q_L

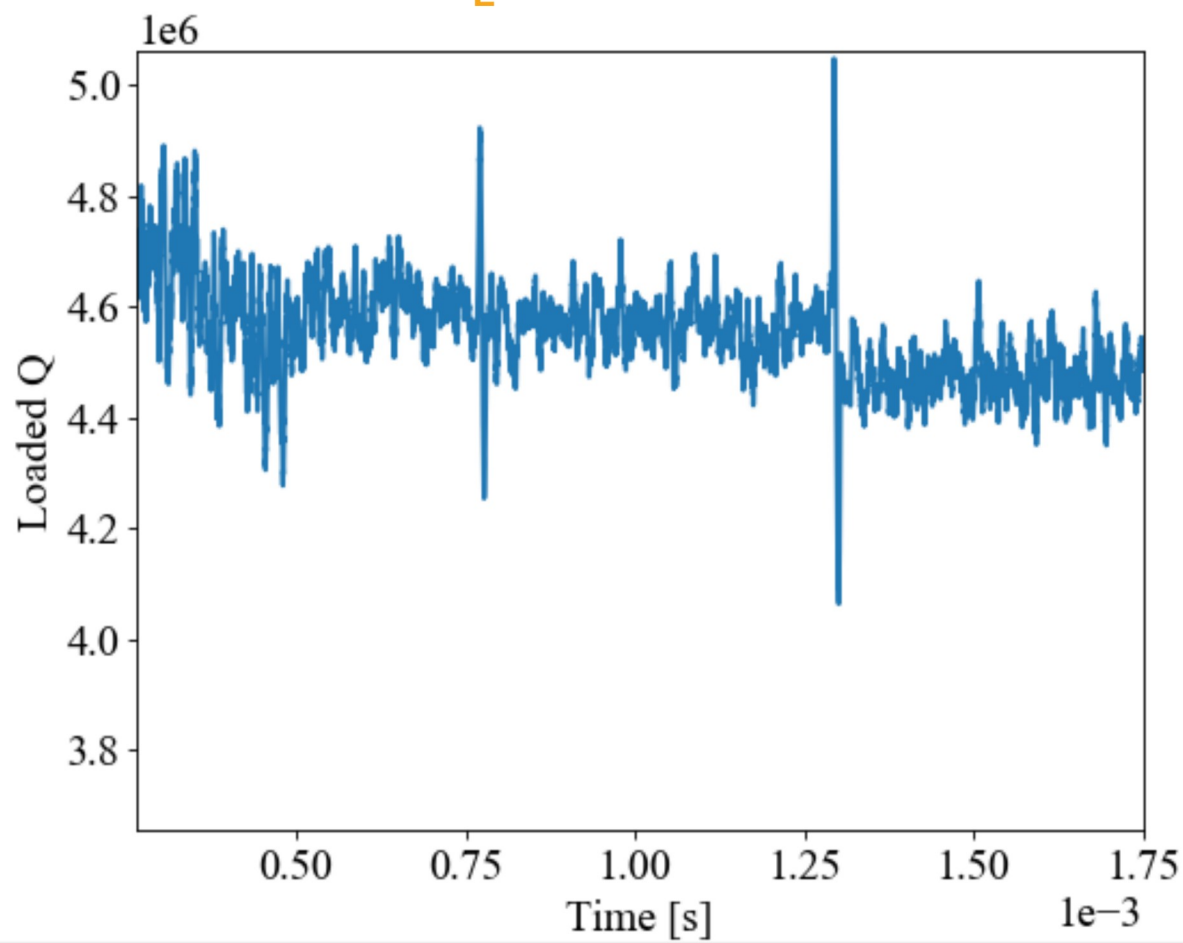

LLRF challenges: coupler heating

Measurements done changing the coupler insertion

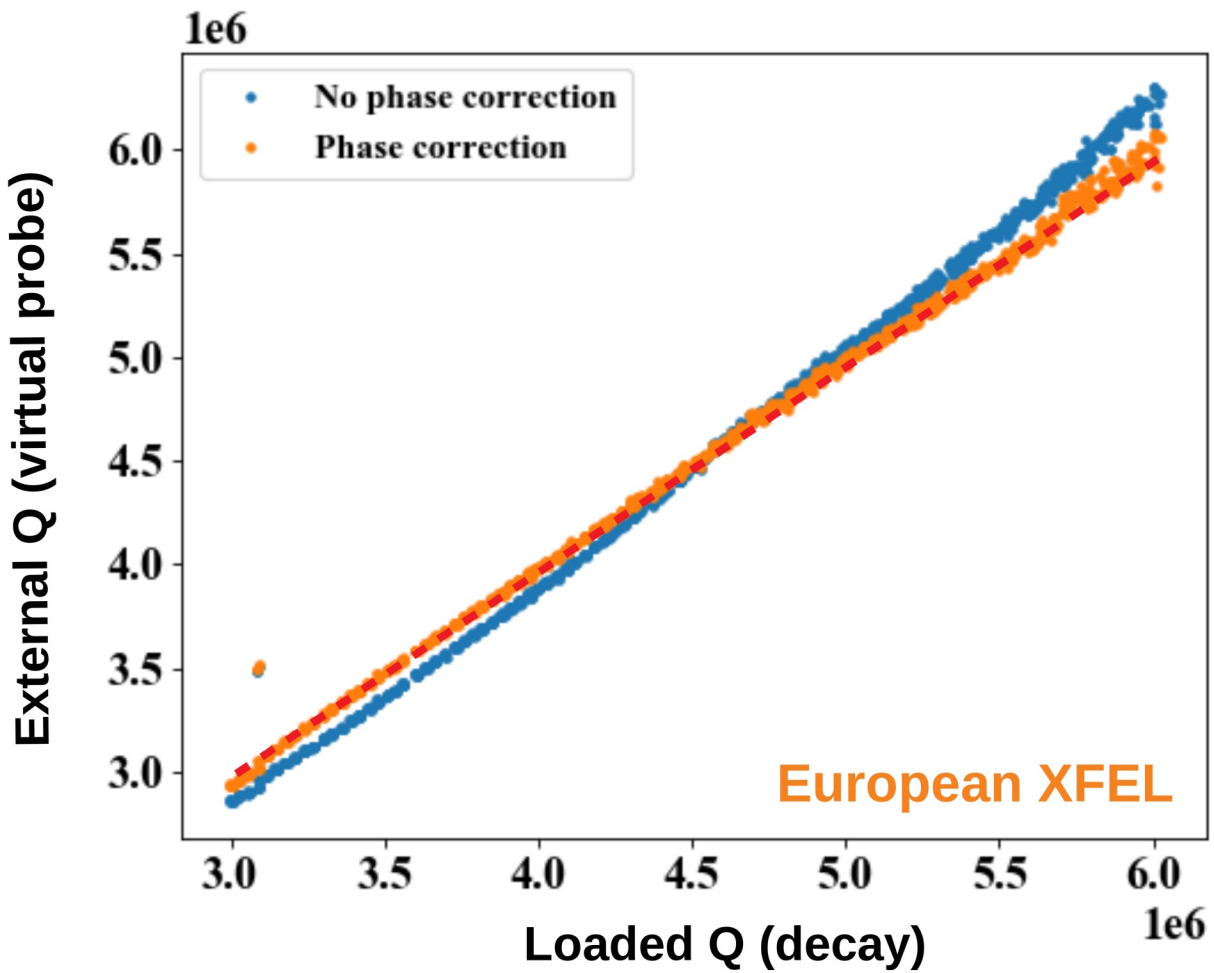

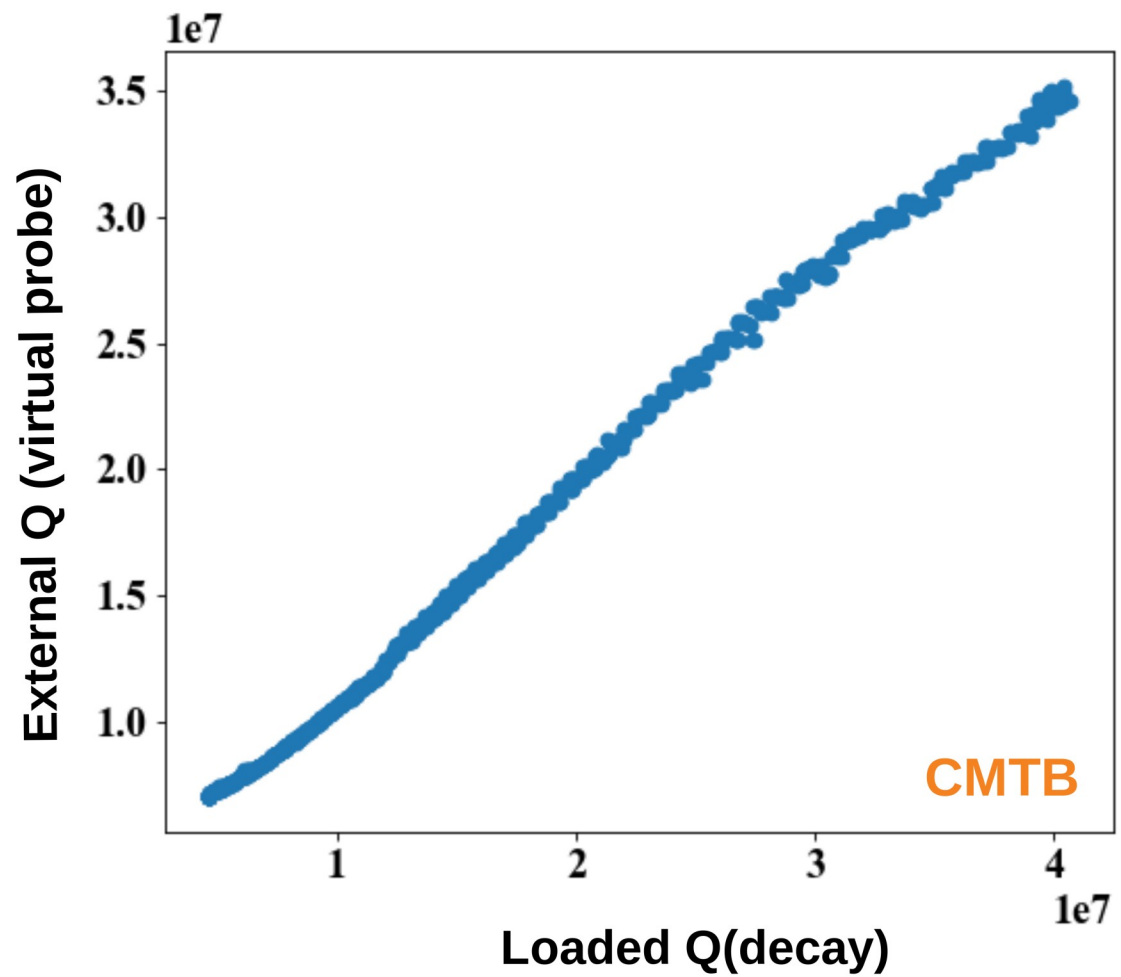

Photo: J. Branlard

HELMHOLTZ RESEARCH FOR GRAND CHALLENGES

PIER
Partnership of
Universität Hamburg and DESY

Universität Hamburg
DER FORSCHUNG | DER LEHRE | DER BILDUNG

European XFEL

DESY.

Photo: J. Branlard

HELMHOLTZ RESEARCH FOR GRAND CHALLENGES

PIER
Partnership of
Universität Hamburg and DESY

Universität Hamburg
DER FORSCHUNG | DER LEHRE | DER BILDUNG

European XFEL

DESY.

Estimating key operation parameters for SRF cavities in CW.

Andrea Bellandi, Chicago

1/10/2019

Swissotel Chicago
323 E Upper Wacker Drive
Chicago, IL 60601

LOW LEVEL RADIO FREQUENCY WORKSHOP 2019

HELMHOLTZ RESEARCH FOR GRAND CHALLENGES

PIER
Partnership of Universität Hamburg and DESY

Universität Hamburg
DER FORSCHUNG | DER LEHRE | DER BILDUNG

DESY.