Development of Precision Timing Systems for Future LCLS Operation

Justin May

Representing Contributions from

S. Block, G. Coslovich, S. Droste, J. Frisch, K. Gumerlock, B. Hong, K. Lafortune, L. Ma, M. Martinez, M. Weaver, C. Xu and others

SLAC National Accelerator Laboratory

SLAC NATIONAL ACCELERATOR LABORATORY

LCLS Linac Coherent Light Source

Introduction

The upgraded LCLS accelerator and experiment programs will be dependent on integration of a number of systems which present novel challenges. Our staged approach, facilitating a set of experiments scheduled during 2020 while elements of the superconducting upgrades to the SLAC linac are carried out, is to deliver photons to both the hard and soft xray beamlines using the conventional 120 Hz copper accelerator. This requires that we recommission some elements of the event and precision timing systems that depend on 476 MHz reference rf, while building and installing new elements that will be needed for 1.3 GHz, high beam rate operation in the future.

Current State of Machine

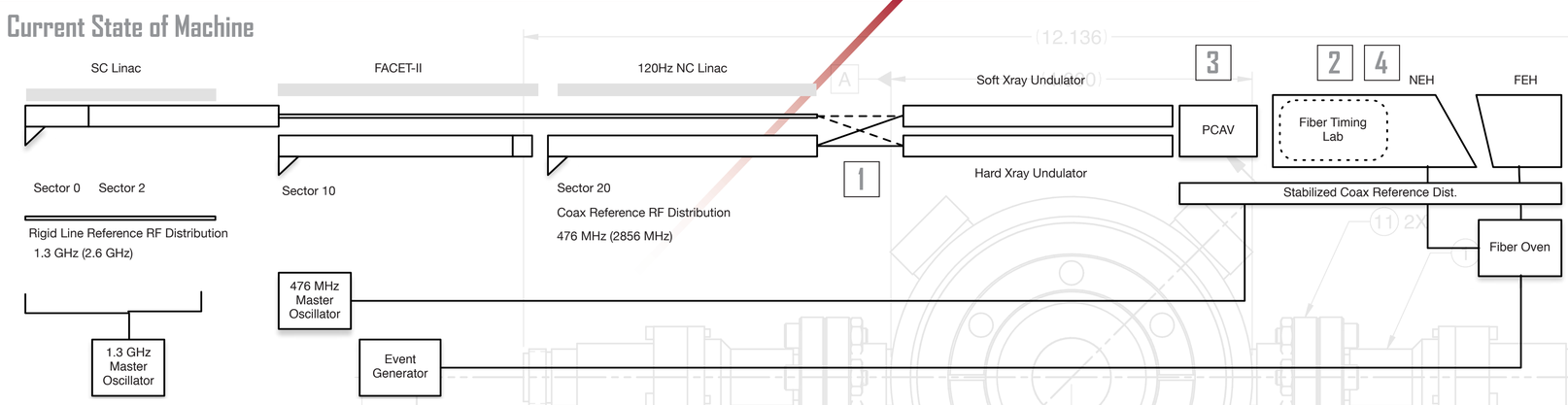

RFoF Development

- RF reference distribution over common telecom fiberoptic
- Interferometrically stabilized
- Pulsed to resolve outbound and inbound carrier pulses, then used to null phase drift
- RF reconstituted at fiber endpoints
- Should be less expensive to deploy and maintain than current rf reference distribution by large diameter coaxial cable

RFOF Conceptual Overview

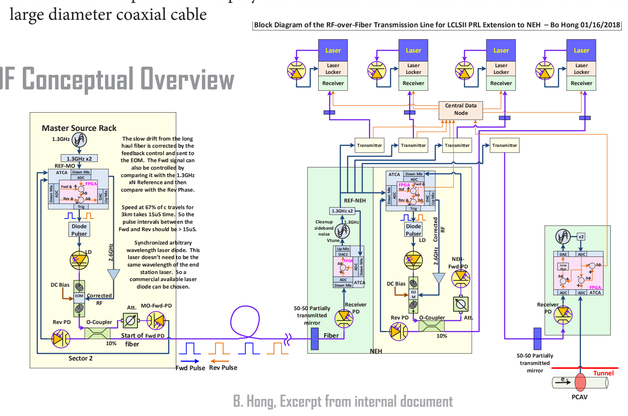

B. Hong, Excerpt from internal document

Event System

The 120 Hz event system for LCLS is based on a combination of subsystems.

- Interfaces to legacy LLRF and diagnostics systems
- VME and PCIe-based event generator (EVG) and reciever (EVR) systems
- Timing is derived from the 476 MHz Master RF and 119 MHz fiducials

Laser Timing Control

Laser timing is controlled by one of two SLAC-designed systems:

- A modular system designed to fit the Stanford Research Systems Small Instrumentation Module form factor
- An ATCA common platform-based system

The modular system has over 40 system years (integrated) of operation with no significant downtime. However, the ATCA system has been chosen for future systems because of it's greater supportability (common components between applications) and improved performance

Laser Locking Functionality

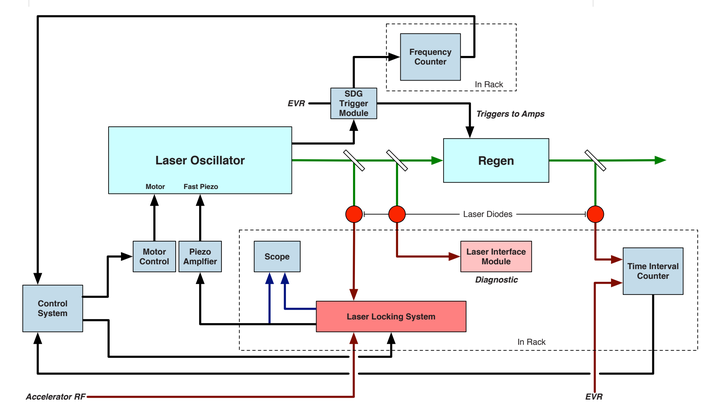

1 CLTS Operation

The new configuration of the LCLS Undulator Hall has undulator lines for hard and soft xray delivery. For upcoming operation, operations will deliver to both beamlines using the 120 Hz existing linac, prior to superconducting linac commissioning. The CLTS program ("Copper Linac to Soft [xray undulator]" doubles the number of precision timing diagnostics needed for experiment support, as well as dictates additional event system development.

2 Xray Cross-Correlator

- Final arbiter for temporal measurement of incoming xrays and experiment lasers
- Measures incoming t(2) signature using change in refractive index of material induced by t(1) signature
- Original version required transmissive measurements
- Upgraded version for high rate beam will itself be transmissive, allowing operation on all experiments
- Testing underway

Cross Correlator Development and Target Materials

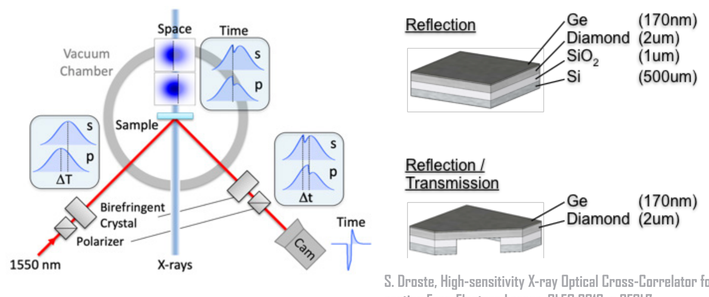

S. Droste, High-sensitivity X-ray Optical Cross-Correlator for Next Generation Free-Electron Lasers; CLEO 2019, p SF3I.7

3 Phase Cavities

- Strong fundamental mode
- Coupling and Q designed for a nominal beam charge and sufficient decay time for digitization and processing
- Total of 8 cavities will be installed, four per beamline, two each of 2856 MHz and 2600 MHz reference frequency
- Actual center frequency offset for dark current suppression
- Processing will be done with Common Platform components
- System is integrated in the drift compensation for the rf reference and timing fiber to the experiments

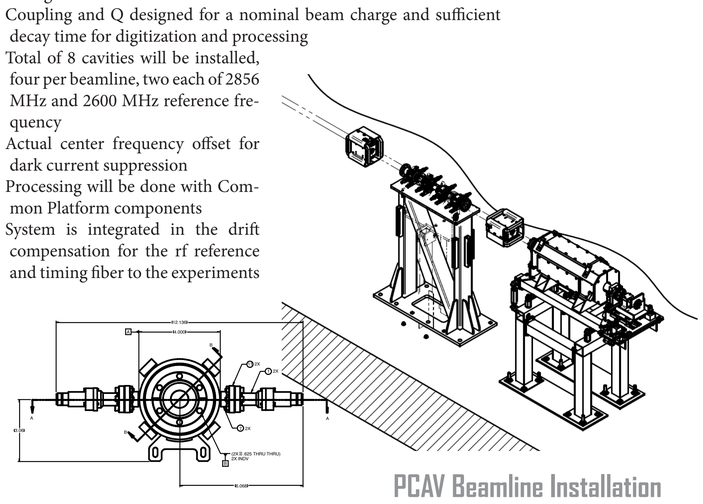

PCAV Beamline Installation

Timing Core System

The 1 MHz timing system for LCLS high rate operation leverages the SLAC Common Platform (ATCA framework).

- Proven in field and on multiple experiments at SLAC and beyond
- Supports complex delivery modes of the high rate upgrade, including mps/bcs mode limiting
- Will provide field modules that are close to a drop-in replacement for existing PCI and VME based event receiver trigger modules
- Designed to function on either a 2856 (476) MHz-based legacy timing backbone or 2600 MHz-based superconducting linac backbone
- Includes time of flight delay corrections for signal pathlength

4 Fiber Locked Laser

- Cascaded system that can fall back to rfof or similar phase locking in lieu of full high rate locking directly to a beam pickup
- Currently under development/testing
- Not available for every experiment directly, so will have switchable delivery

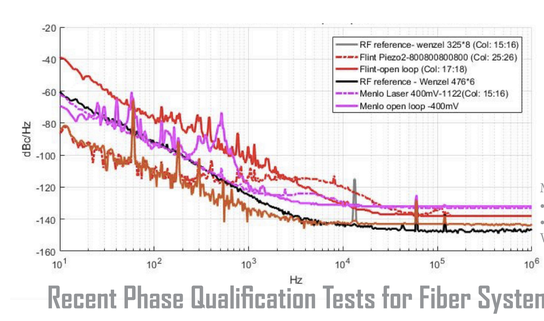

Menlo Orange ~10fs [100Hz…10kHz]
- Light Conversion Flint ~16.5fs
- Amplitude Mikan (not pictured) ~30fs

Work and Data: L. Ma, S. Droste et al.

Recent Phase Qualification Tests for Fiber Systems

Evolution of the Precision Timing System

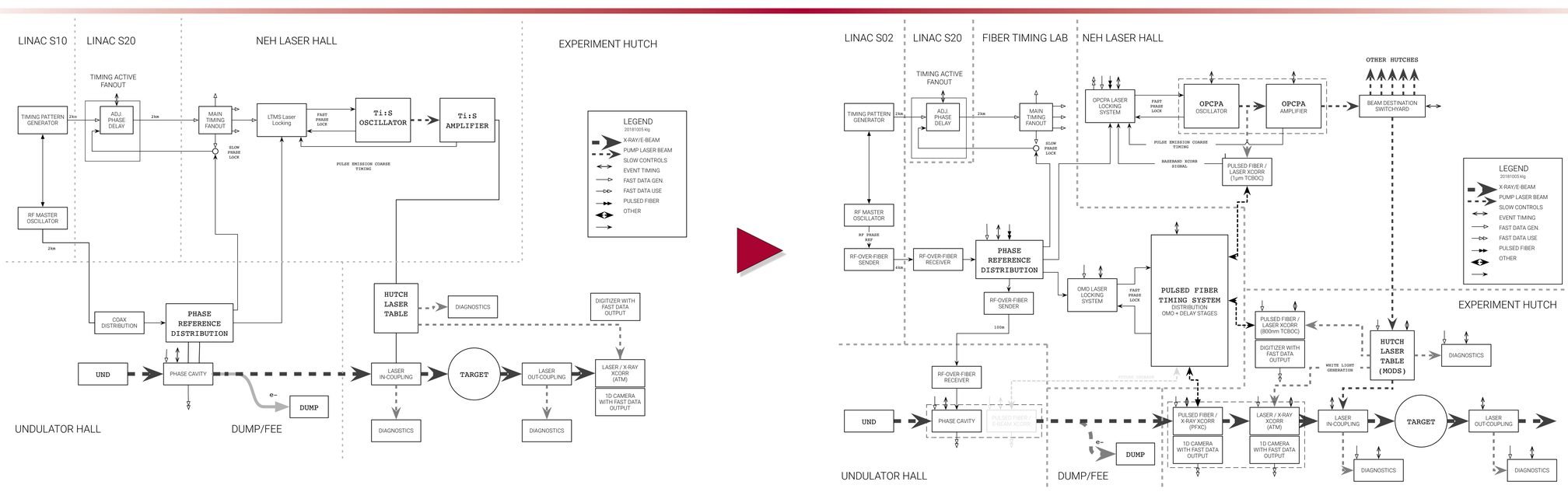

Acknowledgments

Represented here and in publications is a great deal of work across SLAC's organization, including the following groups:
Diagnostics and Applications Development
Electronics Engineering Division (in the Accelerator Directorate)
Photon Controls and Data Systems (under LCLS)
Groups within TID-AIR

LLRF 2019 - Chicago, IL