RF Microelectronics

- New RF microelectronic platforms will catalyze new ways some HEP experiments are done
- Mass deployment of wireless devices in the commercial sector is driving rapid product development: datacomm (cellular, WiFi, IoT, satcomm), location services (GNSS), radar (defense, aviation, auto, weather)
- Drivers are low cost, power, volume, and efficient use of bandwidth

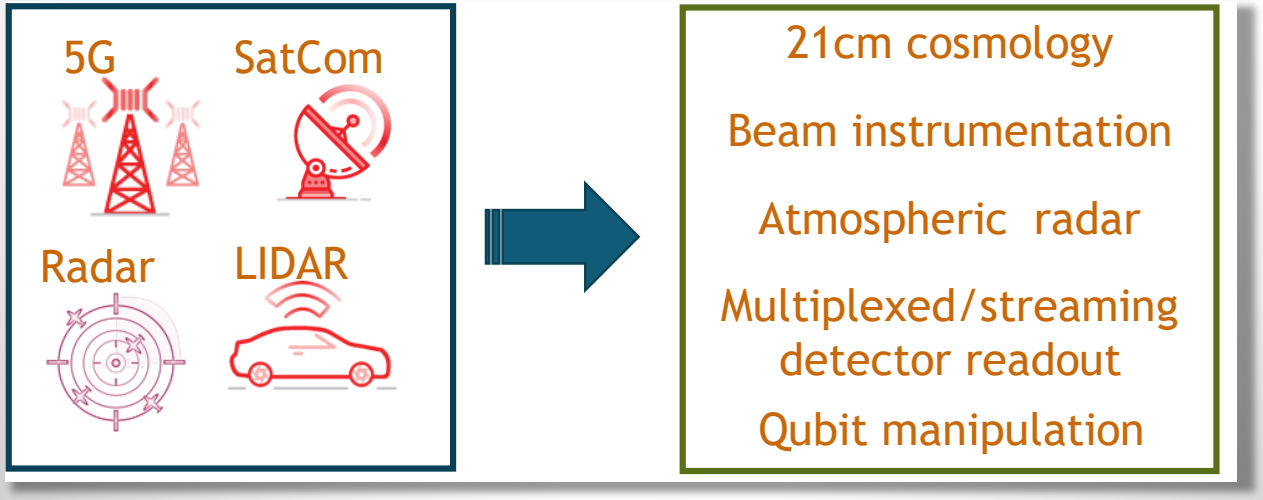

Background

Prior to 2018, two bottlenecks stood in the way of fully-digital processing of high bandwidth, high dynamic range signals. First, ADC performance (as measured on the speed/resolution plane) was barely adequate to acquire multi-GHz signals at Nyquist rate, having only a few bits of resolution.

Therefore, heterodyne techniques involving costly, sensitive analog preconditioning circuitry (mixers, local oscillators, quadrature couplers, etc.) were used to translate signals down to intermediate frequencies for lower-rate digitization.

Second, the interface that transfers digitized data between the high-speed ADC and first-stage digital processor became complex and power-consuming, and required expert circuit layout techniques to avoid timing errors. The cost and design effort to realize high-bandwidth, high-resolution digital processors relegated them to specialty markets.

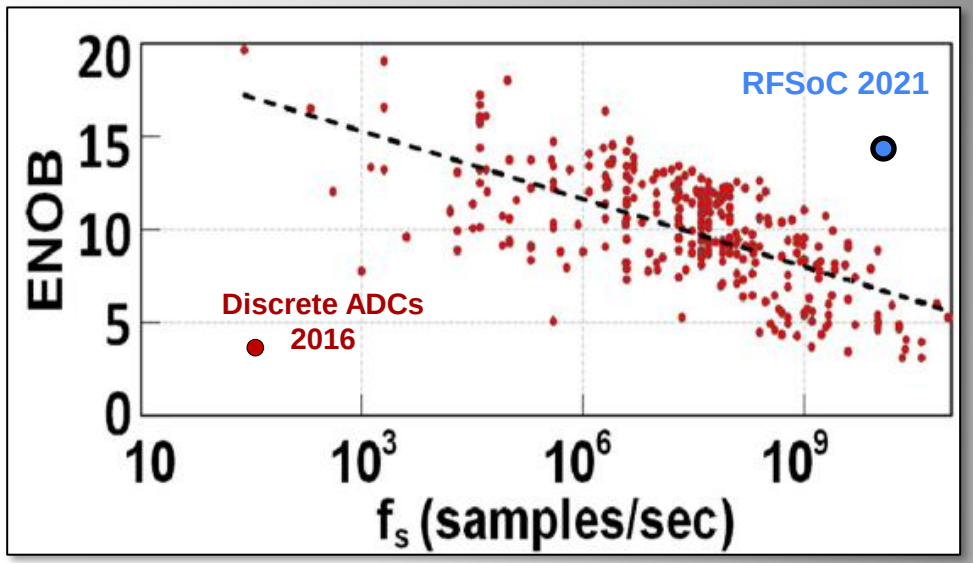

2018: introduction of Xilinx Ultrascale+ RFSoC. Multiple, high-rate ADCs & DACs in 14nm CMOS with rich fabric of fast programmable logic, memory, & quad-core ARM processors. ADCs sampling speed/resolution/power FOM exceeding state-of-the-art discretes.

→ Enabled 'software-defined radio' (digital processing at RF rates replacing analog conditioning)

→ Order-of-magnitude reduction in PCB development time

Platform characteristics

- Combination of GHz-bandwidth data converters, abundant FPGA resources, and streaming I/O make them attractive for research instrumentation.
- Several vendors now offer the RFSoC chips on compact form-factor modules with turnkey base firmware and a variety of custom IP for typical applications. Performance and number of resource blocks are available for a fraction of the cost and size of conventional implementations.
- Xilinx has introduced four generations of RFSoC between 2018-2022, each time increasing the maximum ADC sampling rate by >14%, and further improvements are expected as new sub-10nm CMOS process nodes become available. Versal AI RF ACAP 2023.

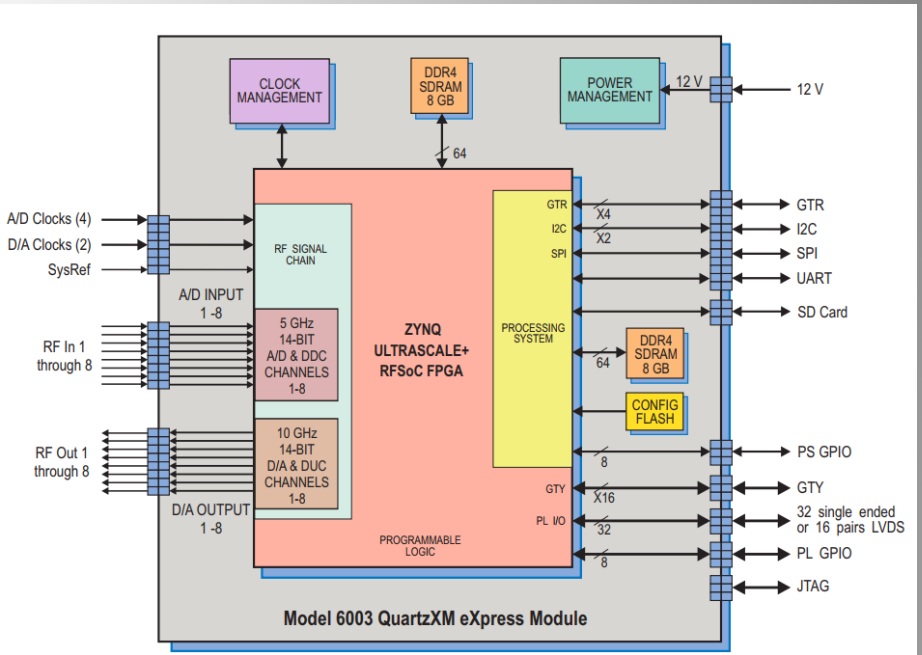

Pentek

14b ADC	14b DAC	Input BW	Logic	RAM	DSP slices	Transceiver
6 @ 5.9	6 @ 10	7.13	930	38	4.3	2@100
GSPS	GSPS	GHz	Kcells	Mb	K	Gbps

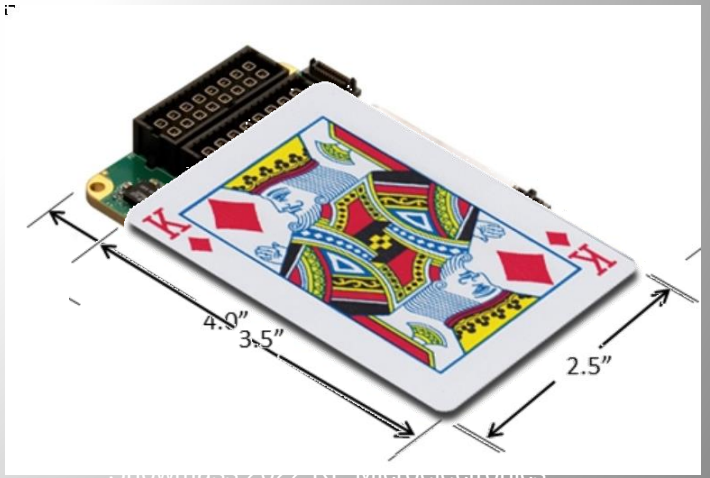

RF in HEP

- **Legacy HEP instrumentation centers around sensors and readout electronics for ionizing radiation**
- **Recently-proposed experiments need to sense or control EM radiation in the RF range, acquiring and/or controlling information using the classical properties of the EM field (frequency, phase, polarization)**

1. Sensing RF emission from naturally-occurring sources

- *Cosmological 21cm emission from neutral hydrogen*
- *Askaryan radiation from neutrino interactions in polar ice*

2. Probing resonant systems

- *Haloscope-based search for wavelike dark matter*
- *Manipulation of superconducting qubits*

3. Highly-multiplexed transmission of analog information on microwave carrier

- *Highly-multiplexed readout of superconducting TES and MKID detectors*
- *Streaming readout*

4. Machine control and diagnostics

- *Beam position monitors*
- *Synchronization of accelerator and detector timing*

1. Sensing RF emission from naturally-occurring sources

Large scale structure via ***21cm Intensity Mapping***: tomographic reconstruction of the density field

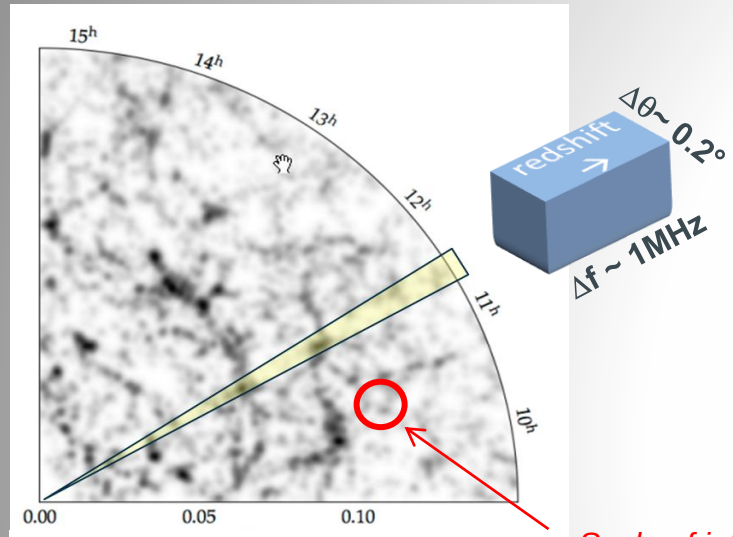

redshift
(line-of-sight distance)

Scale of interest for cosmology

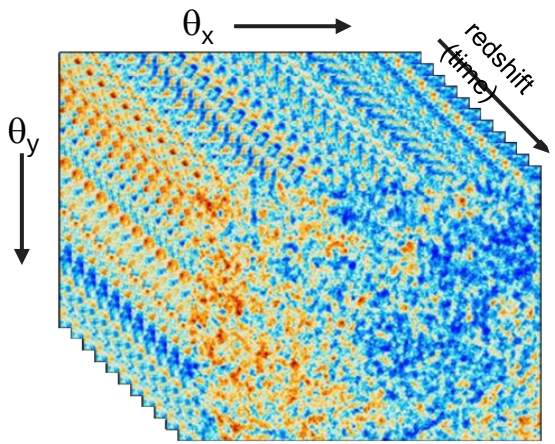

coarse map (like CMB),
but in 3D

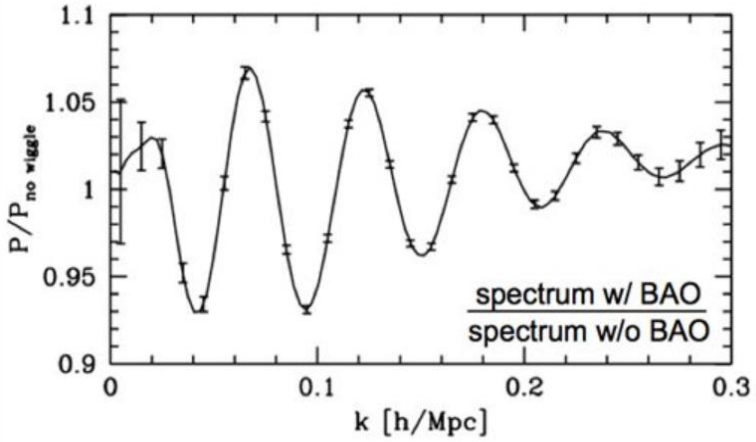

power spectrum of fluctuations,
measure of standard ruler feature imprinted
at recombination

Redshift range of most interest: z ~ 1 (emergence of Dark Energy)

CHIME (Canada)

HIRAX (S. Africa)

PAON-4 (France)

TIANLAI (China)

1. Sensing RF emission from naturally-occurring sources

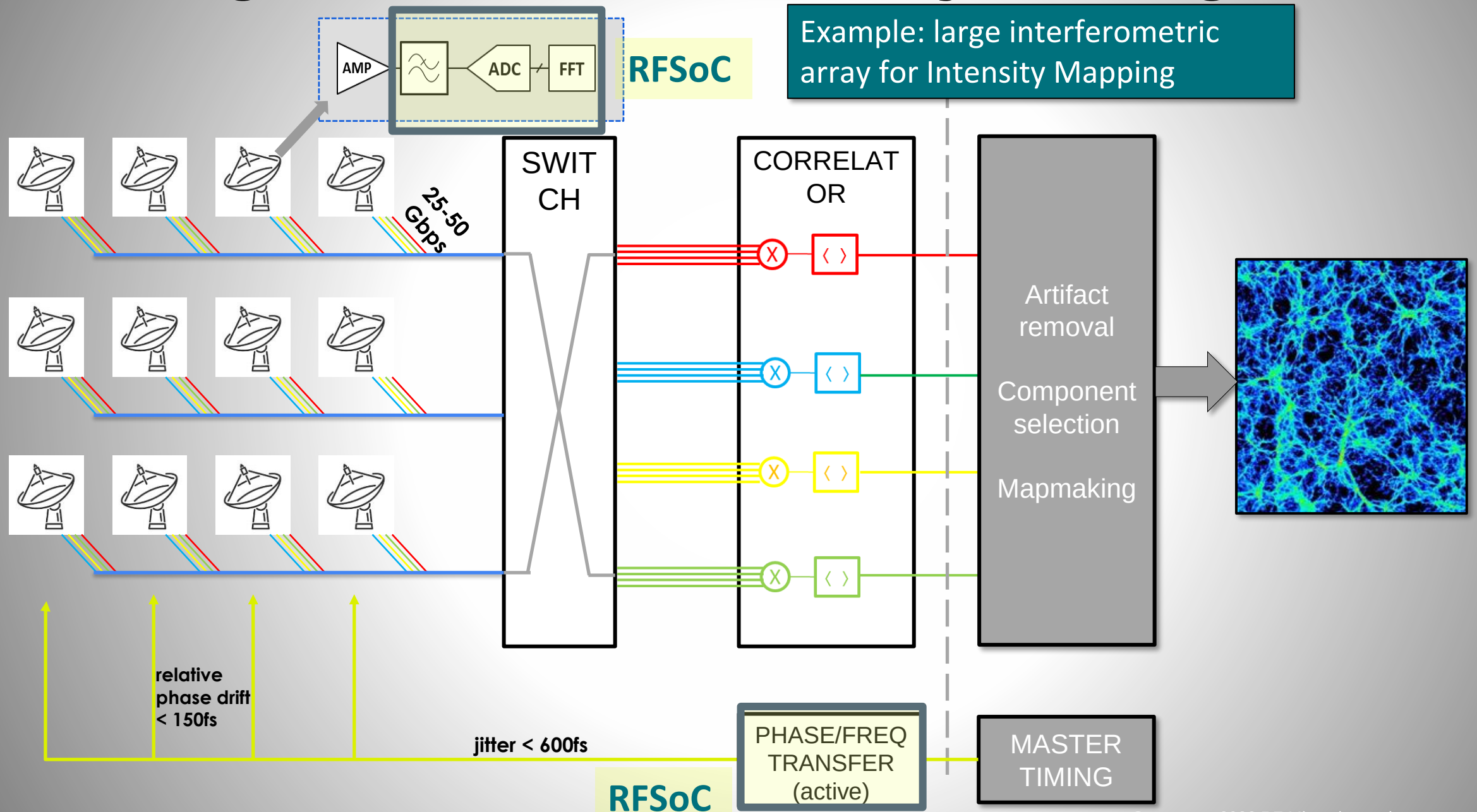

A concrete example: Packed Ultrawideband Mapping Array (PUMA)

- A next-generation cosmic survey using intensity mapping of the 21-cm emission from neutral hydrogen
- Proposal submitted to the ASTRO2020 Decadal Survey and Snowmass LOI call
- Interferometric array of 32,000 (5,000) six-meter dishes closely packed
- Redshift range $0.3 < z < 6$ corresponding to $1100 < \nu < 200$ MHz
- Primary science goals:
  - ***Probing physics of dark energy in the pre-acceleration era***
  - ***Searching for signatures of inflation***
  - ***Probing the transient radio sky (fast radio bursts and pulsars)***

PUMA
packed ultra-wideband mapping array

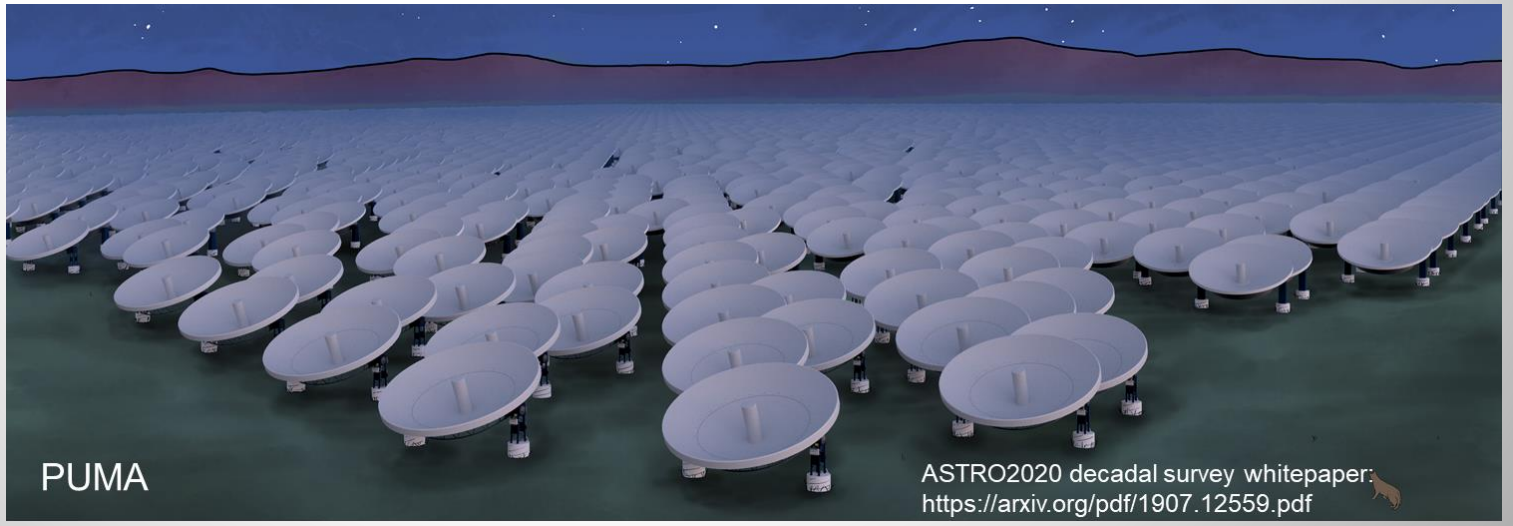

1. Sensing RF emission from naturally-occurring sources

Radio detection of neutrinos is possible through the ***Askaryan effect***, where particle showers in dense media (in this case polar ice) cause nanosecond-scale radio pulses in the frequency range between 30 MHz and 1 GHz. Consequently, fast, broad-band and low-noise receivers and systems are needed to efficiently detect the rare signals. Dozens to hundreds of such receivers in an interferometric phased array distributed over a few square km are being proposed, requiring cost- and power-efficient modules having exquisite (sub-nanosecond) timing precision to accurately reconstruct event topologies. Experiments such as ARA, ANITA,and ARIANNA have begun studying the diffuse flux of astrophysical neutrinos and candidate sources of extra-galactic neutrinos.

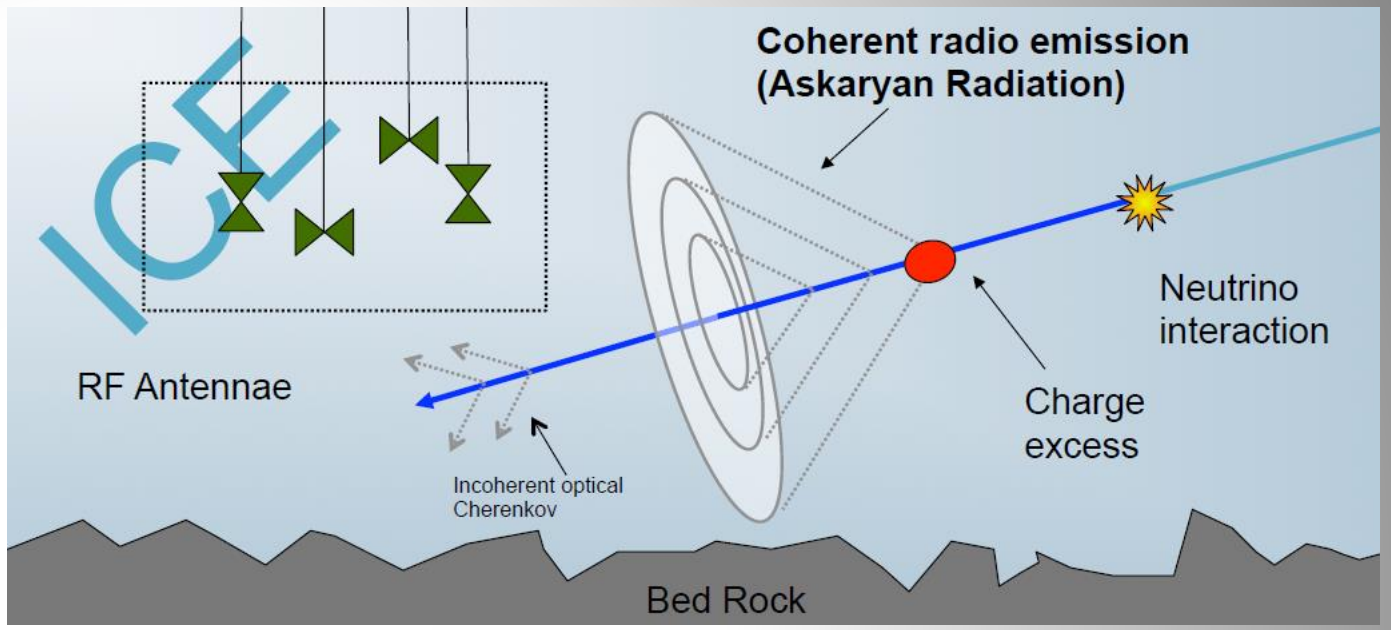

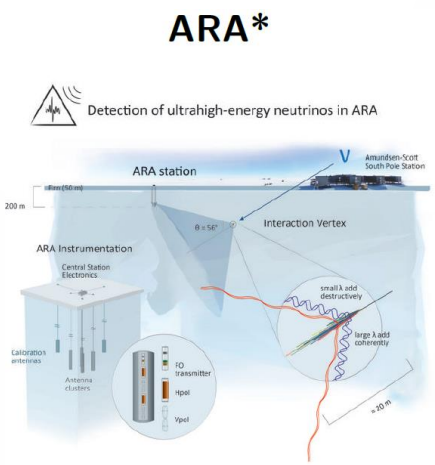

Externally-powered deep low-gain antennas

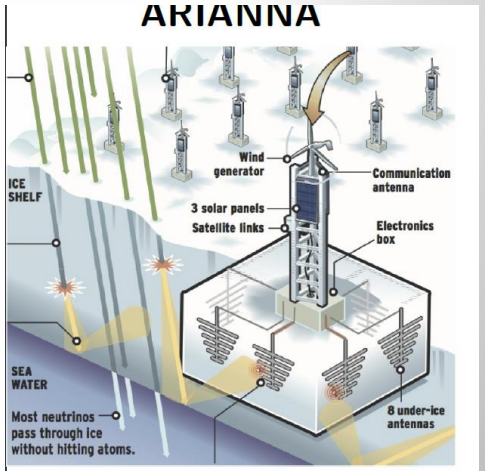

Self-powered, surface high-gain antennas

2. Probing resonant structures: qubit control and readout

Typical superconducting qubit is designed with its transition energy in the order of a few GHz, and requires arbitrary and precise microwave generation and detection for control and measurement.

As the number of qubits increases, the number of microwave channels required increases linearly. Therefore, designing a qubit control system that is scalable, compact and cost- effective, while maintaining its precision, speed, and features, is imperative.

A basic qubit control system consists of DACs to generate the resonant probe pulses and ADCs to digitize the analog signals that travel out from the fridge.

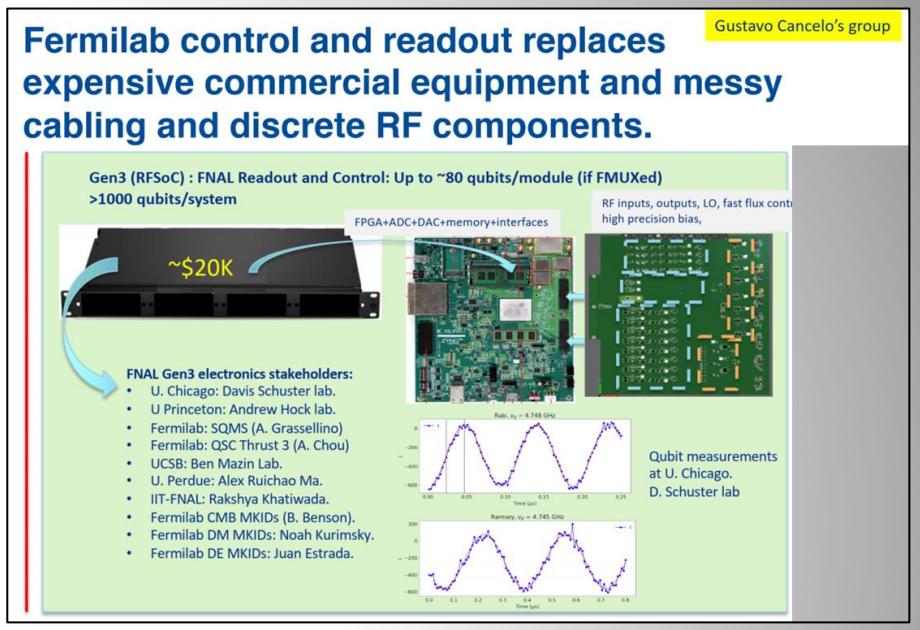

Heinsoo et al. 2018, *Rapid High-fid*
Readout of Superconducting Qubits
https://doi.org/10.1103/PhysRevApplied.10.034020

Demonstration of high-fidelity, fast r
multiplexed qubits on a single 1.2GHz

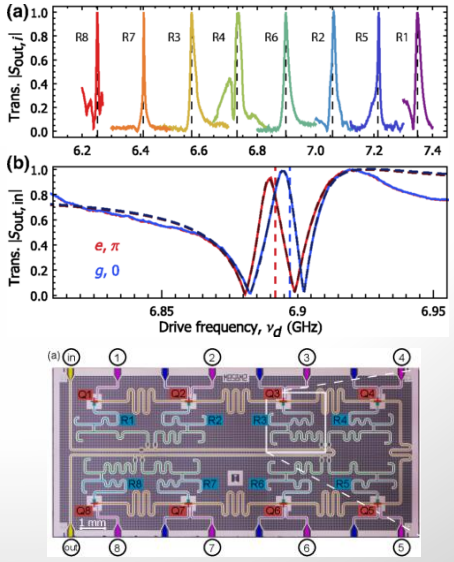

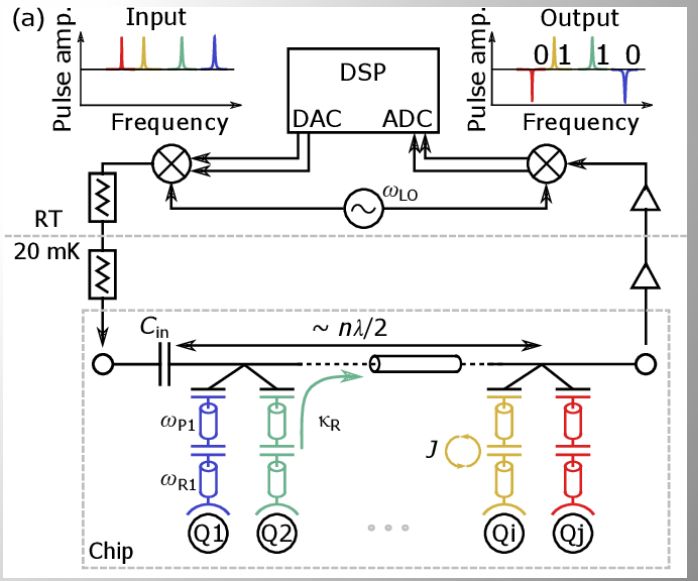

3. Highly-multiplexed transmission of analog information on a microwave carrier

Detector in an inaccessible location is constructed as a set of resonators on a periodically-loaded transmission line.
Each resonator is tuned to a discrete frequency.
Resonators are continuously excited by a comb probe signal and the output spectrum is recorded.

Radiation event or flux causes a shift in the amplitude, frequency, and/or phase of the resonance.

➔ ***Simultaneous sensing of amplitude, position, and timing.***

➔ ***Single coax cable reads out O(1000) detector elements.***

Used with TES or MKID detector arrays, but can be extended to enable frequency-multiplexing of room-temperature streaming readout.

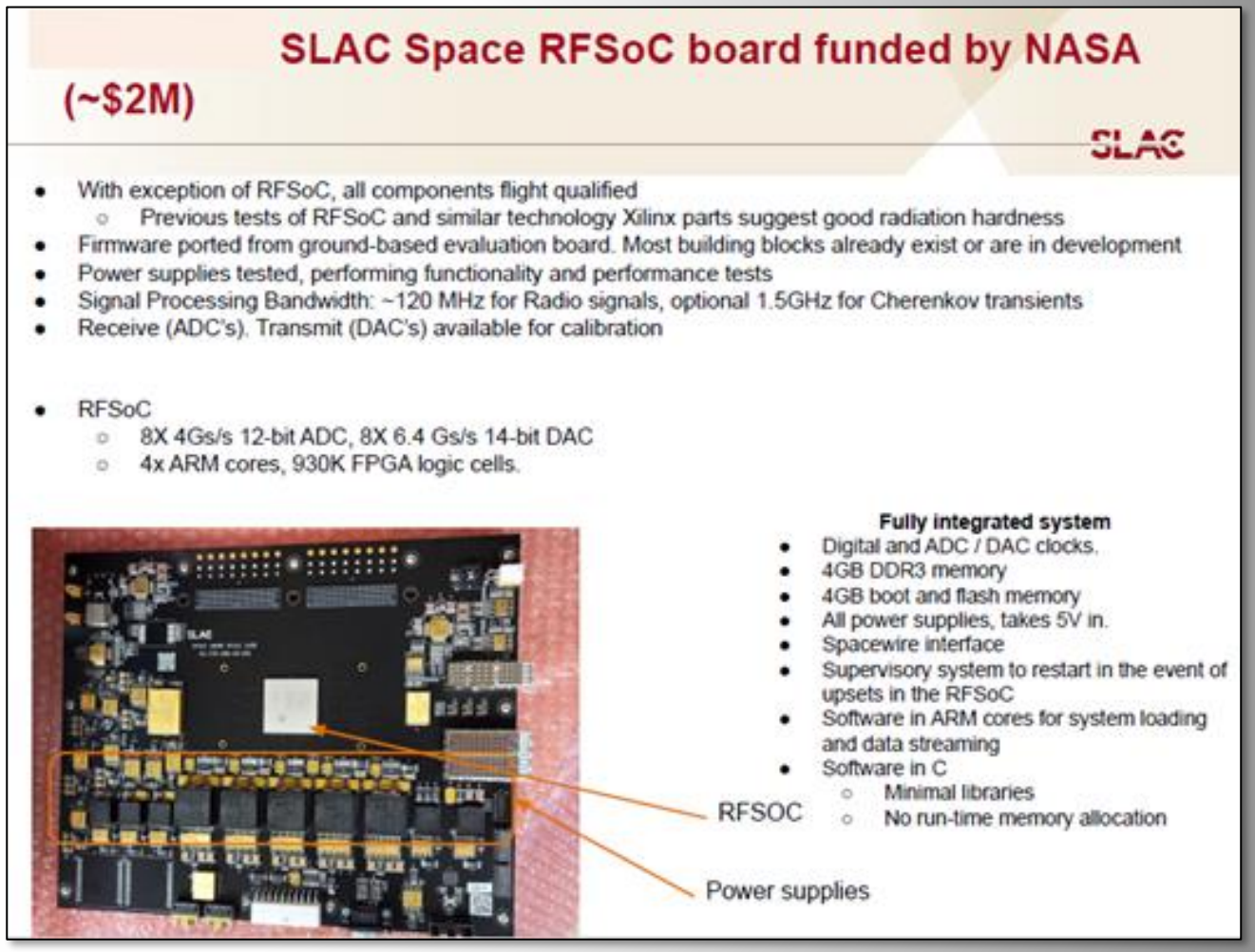

3. Highly-multiplexed transmission of analog information on a microwave carrier

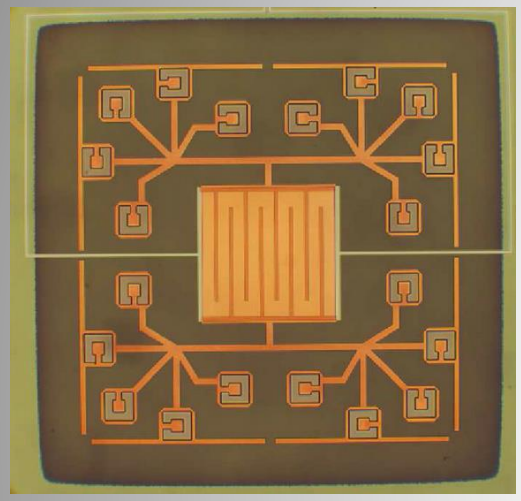

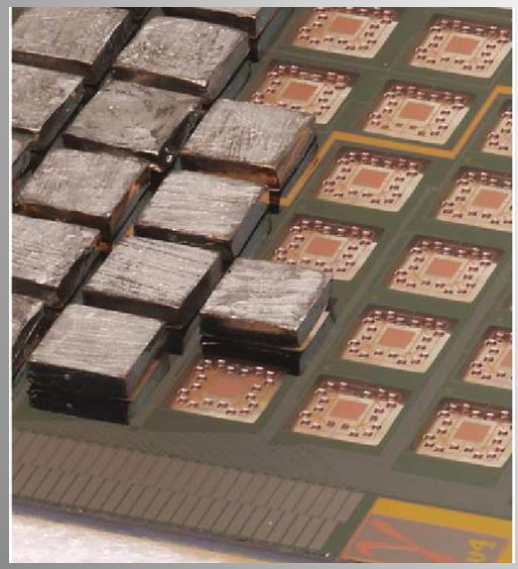

Example: TES array with frequency-division multiplexing for high-resolution x- and gamma-ray spectrometry (NIST).

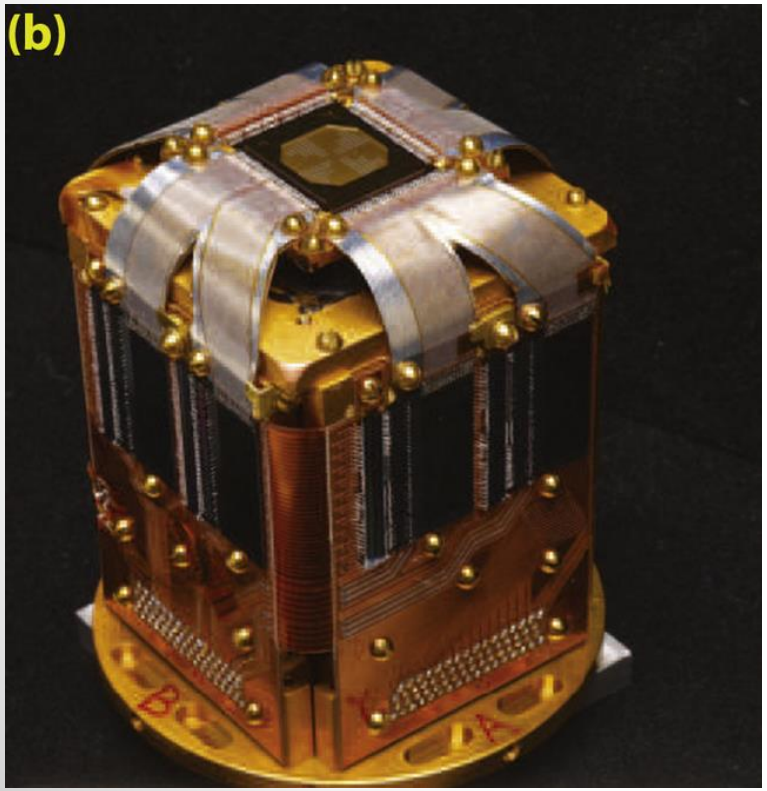

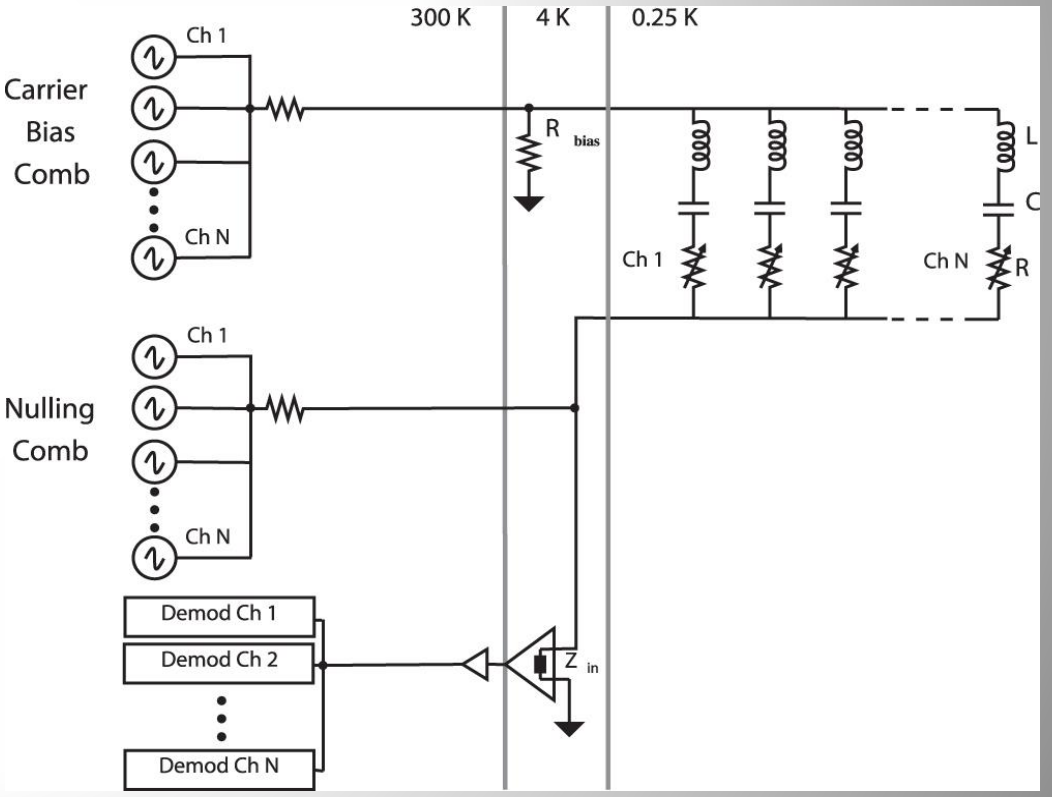

Joel N Ullom and Douglas A Bennett 2015 *Supercond. Sci. Technol.* 28 084003

3. Highly-multiplexed transmission of analog information on a microwave carrier

Example: MKID array with RFSoC frequency-division multiplexing for optical/NIR astronomy (2048 pixels on single feedline)

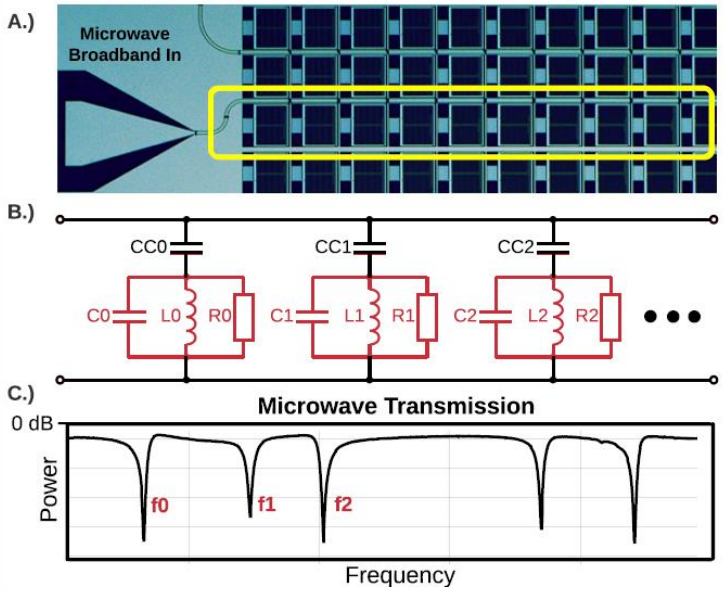

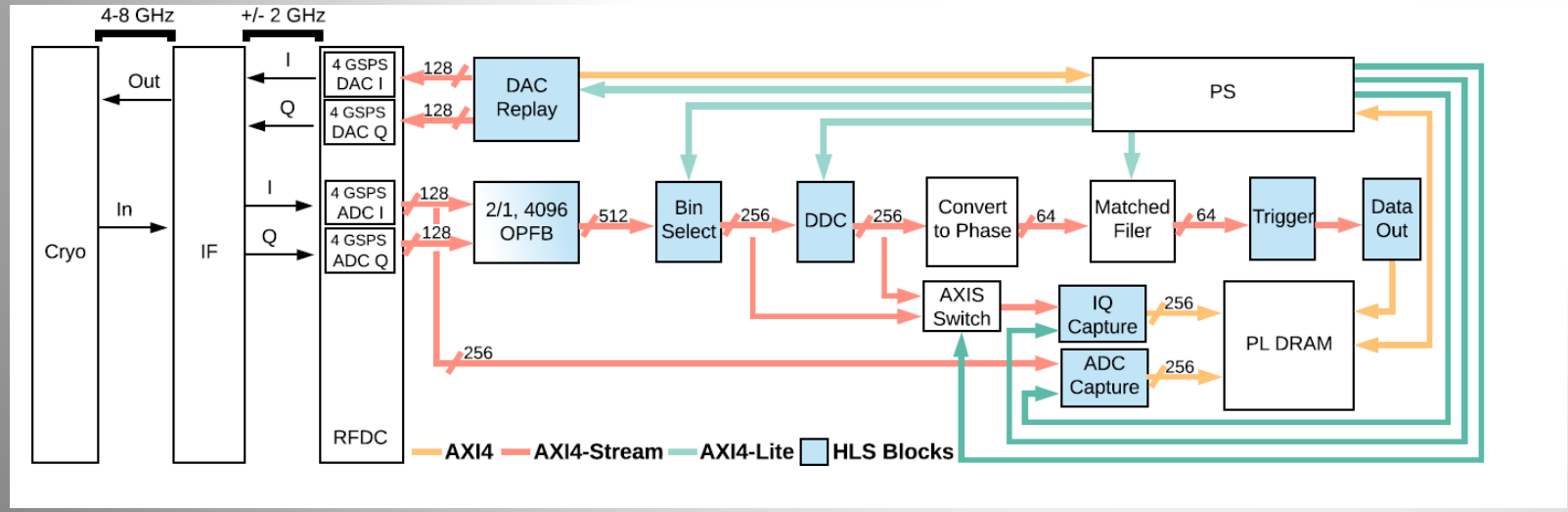

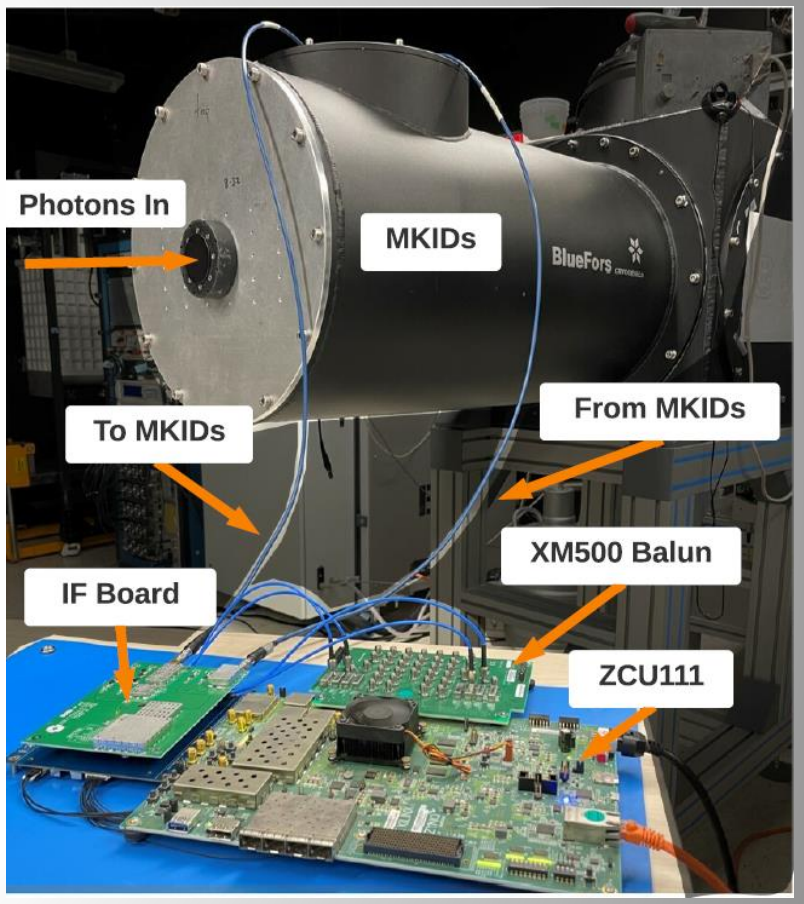

Smith et al., "**Highly-Multiplexed Superconducting Detector Readout: Approachable High-Speed FPGA Design,** "
https://ui.adsabs.harvard.edu/link_gateway/2022arXiv220316520S/arxiv:2203.16520

3. Highly-multiplexed transmission of analog information on a microwave carrier

Convolution-based frequency domain multiplexing (FDM) of <u>pulse mode</u> radiation detectors uses a resonator circuit to convert the detector pulse into a damped <u>sinusoid</u> with unique frequency which identifies the detector number. The frequency-encoded signal from each detector is combined into a single channel by a fan-in circuit, which is then read through a digitizer input channel. The original detector pulse is finally recovered from the digitized frequency-encoded signal by <u>deconvolution</u>. This method is dual of the modulation/demodulation technique that is used to read out, e.g., transition edge sensor <u>bolometer</u> arrays for satellite applications

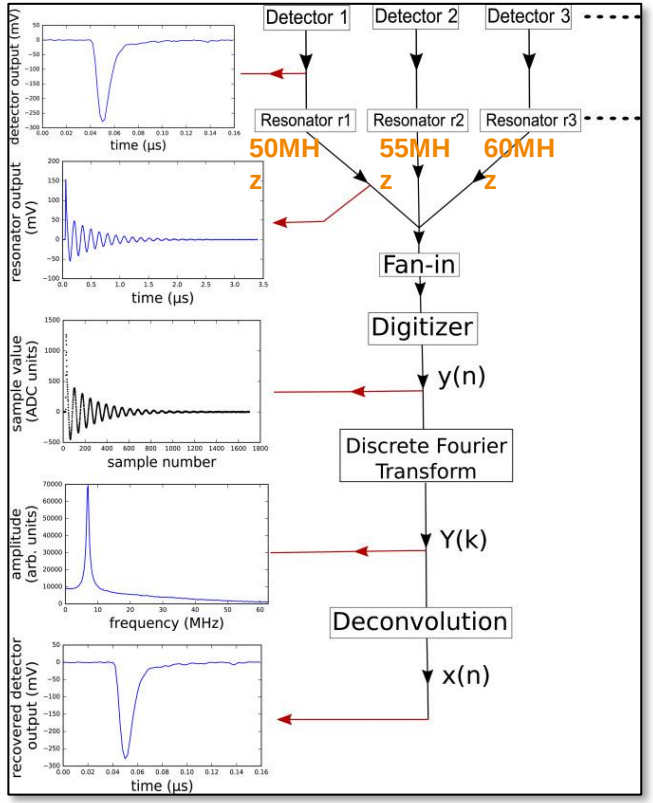

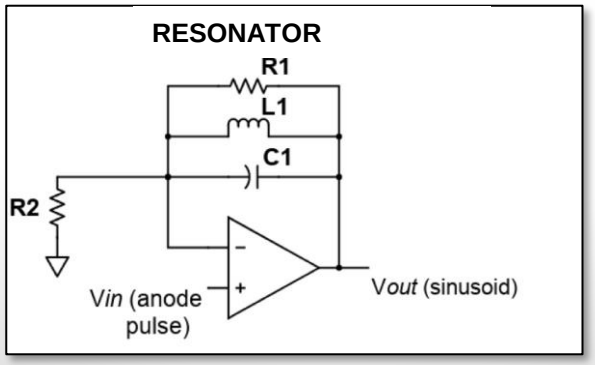

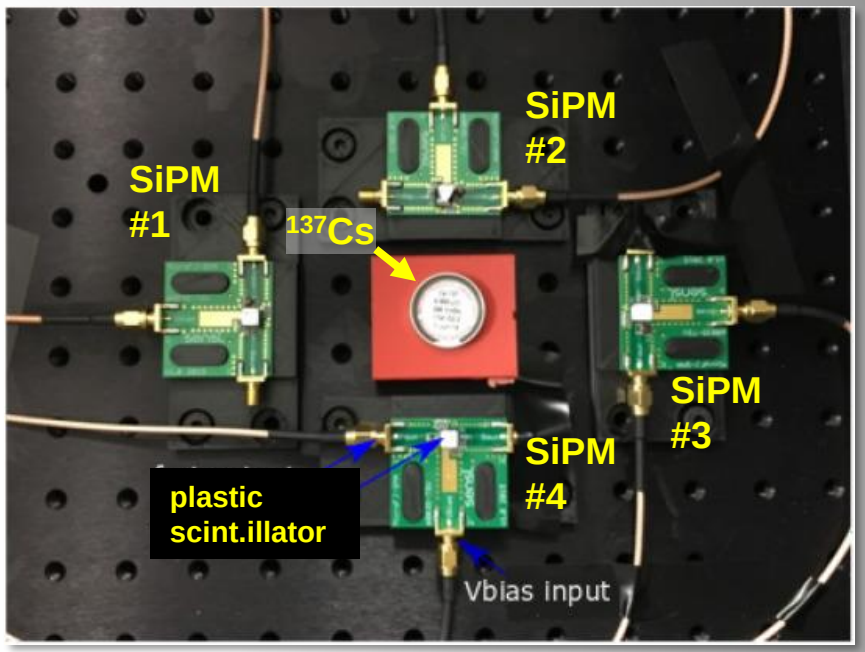

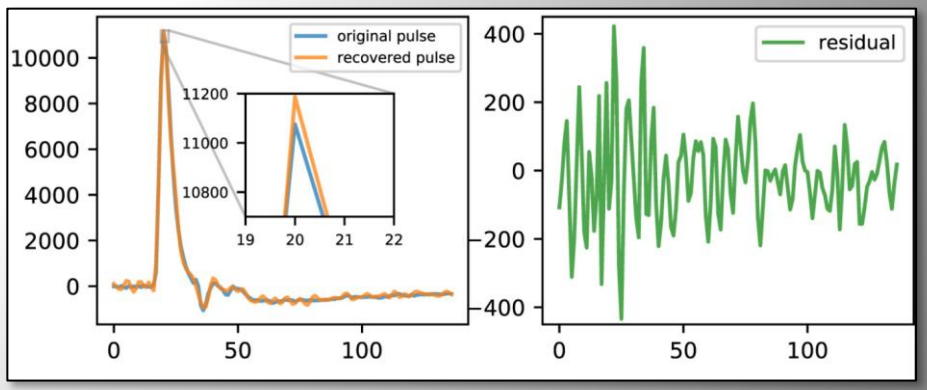

Mishra 2022 https://doi.org/10.1016/j.nima.2021.166116

4. Machine control and diagnostics

RFSoC in HL- Beam Position Monitoring System

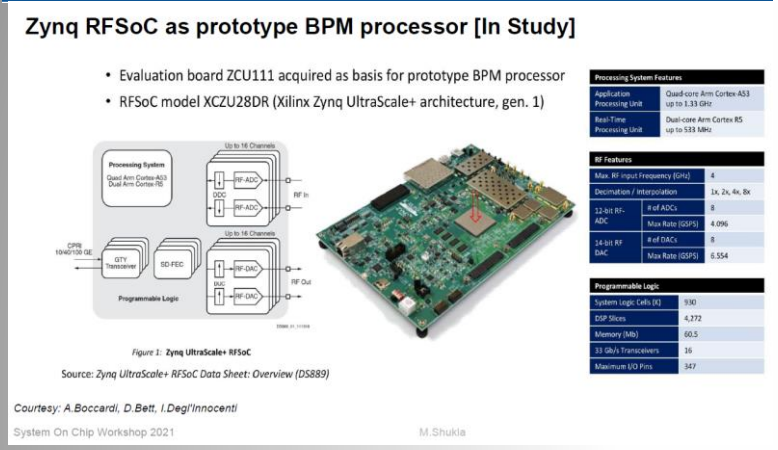

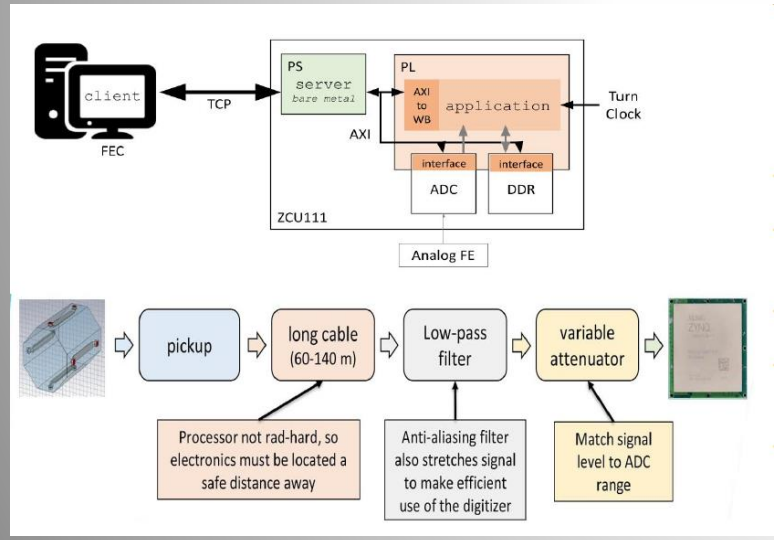

Beam Control AFCZ Card for SPS LLRF Upgrade

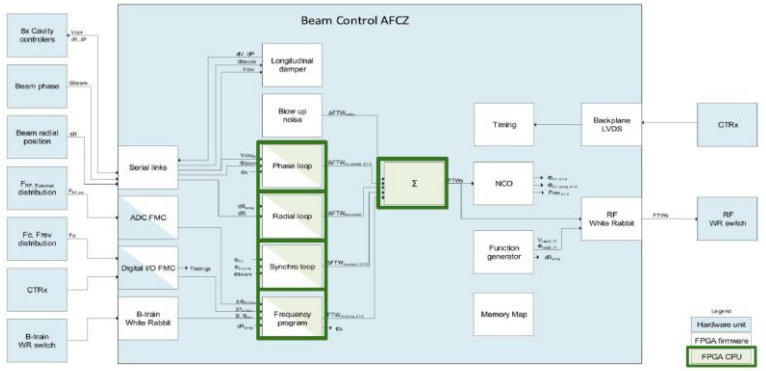

Upgrade of the SPS LLRF beam-based loops on the MicroTCA platform, A.Spierer, LLRF-2019

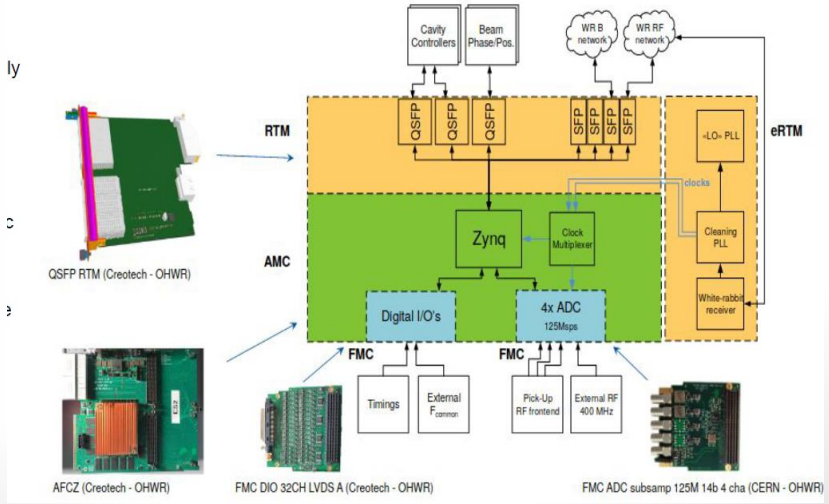

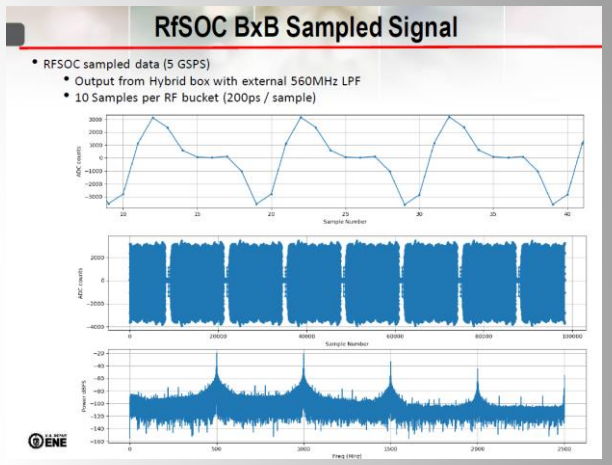

Advanced Light Source High Speed Digitizer

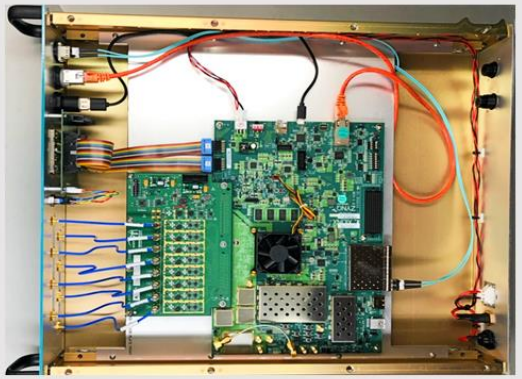

https://indico.cern.ch/event/996093/?view=standard_numbered

Interested?

2nd System-on-Chip Workshop - CERN

Jun 7, 2021, 1:00 PM → Jun 11, 2021, 6:30 PM Europe/Zurich

Zoom

Diana Scannicchio (University of California Irvine (US)), Frans Meijers (CERN)
Revital Kopeliansky (Indiana University (US))

SoC Interest Group Meeting

May 3, 2022, 3:00 PM → 6:00 PM Europe/Zurich

16th xTCA Interest Group Meeting (online only)

Tuesday May 11, 2021, 3:00 PM → 6:15 PM Europe/Zurich

online (Zoom)

1 **Open-hardware MTCA modules for quantum physics**

We will present a set of new open hardware modules in MTCA format developed in a large collaboration o
Warsaw University of Technology, US ARL, University of Maryland, University of Oxford, QUARTIQ, M-Labs,
multi-purpose control systems. Use cases include Big Science applications and development of Quantum
and AMC FMC Carrier boards with several validated extensions. They are compatible with open-source ART
Rabbit sub-nanosecond time synchronization. Alternatively, an extension card for N.A.T. MicroTCA carrier hu
time using the ARTIQ distributed real-time IO (DRTIO) protocol.

Speaker: Grzegorz Kasprowicz (Warsaw University of Technology (PL))

2nd Workshop on System-on-Chip: Across LHC experiments, Accelerator&Technology Sector, and Radioprotection

- 125 registrations
- Meeting fully virtual: zoom + mattermost
- Usually 40..70 participants connected to any session, with pe

- 6 vendor presentations: Avnet/Silica: Xilinx and MicroChip, Intel/Altera, Enclus Scientific ... *special thanks!*
- 3 overview talks: ATLAS, CMS, Accelerator&Technolo
- 14 presentations of different uses of SoC: CMS, ATLAS, and Radiation Protection
- 3 tutorials/demos: CI/CD for firmware, reliable boo
- 4 presentations on system-oriented aspects + discu

PYNQ

Open Source RFSoC Overlays for the ZCU111 & RFSoC2x2 Platforms

Announcements

davidnorthcote

1 May '21

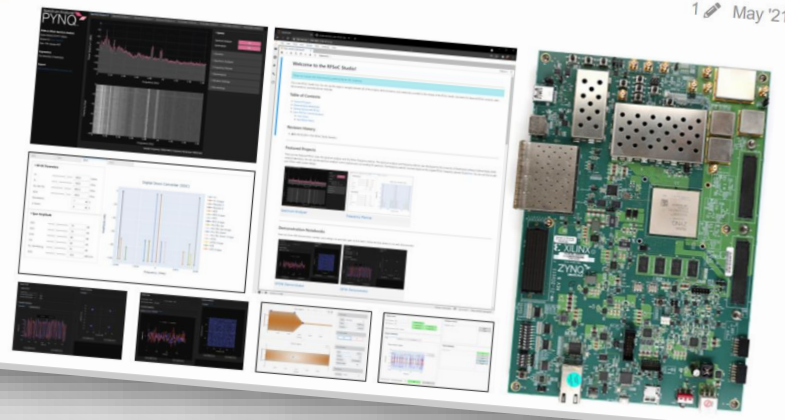

rfsoc

Get Notifications for @ Mentions | Start a Call

About | Members 71

Topic
Add a topic

Description
RFSoC development

Created by
dave on April 16, 2019

Files

ADC-DAC Power.pdf
Shared by Leandro Stefanazzi on Jun 28th

20220608_163351.jpg
Shared by Khanh Pham on Jun 9th

Thanks!

Brookhaven National Laboratory

Global spectrum at high redshift

- The global (i.e., sky-averaged) spectrum of the redshifted 21 cm line has the potential to be a direct probe of the epoch before the first stars and galaxies formed, when the absence of astrophysical processes simplifies the physics.
- Standard cosmological model provides robust prediction of the evolution of the spin temperature (emission/absorption of 21cm from neutral hydrogen) during this epoch.
- In 2018, anomalous 21cm absorption profile at z~17 was observed at 3.8σ disagreement with maximum allowed by ΛCDM, hinting at new physics.
- Further robust 21 cm detection can constrain the proposed theoretical explanations.

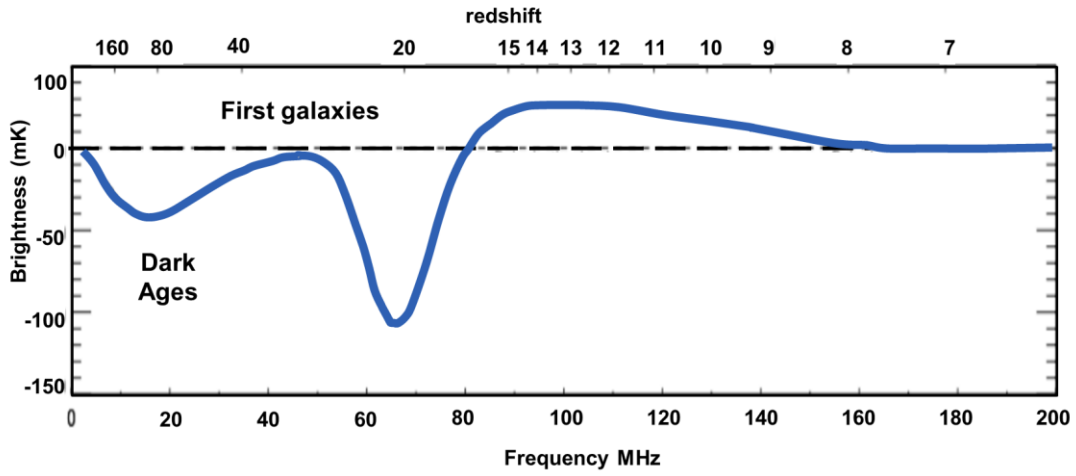

Burns 2019

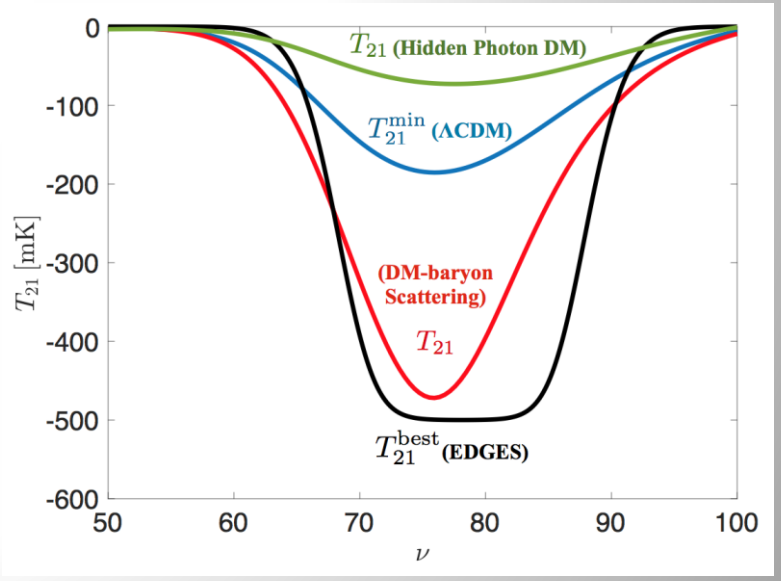

Kovetz 2018

Note: for both these 21cm techniques, one needs to contend with strong foreground emission from our galaxy. A large part of the program is centered on foreground characterization to allow accurate subtraction. At some wavelengths there is also significant transient RFI from anthropogenic sources.