Beam Transfer Line Dipole Preliminary Design

Miao Yu, MSD/TD

04/25/2018

Magnet Specification

- L(eff)=2.45 m
- Gap =52 mm
- Pole tip width = 135 mm
- Width = 640 mm, and height = 320 mm
- Maximum DC current 500 A.
- Max field integral = 0.7 T-m (nominal field is 2.4 kG = 0.24 T)
- Good field region = 24 mm and dB/B = 0.02%.

Design

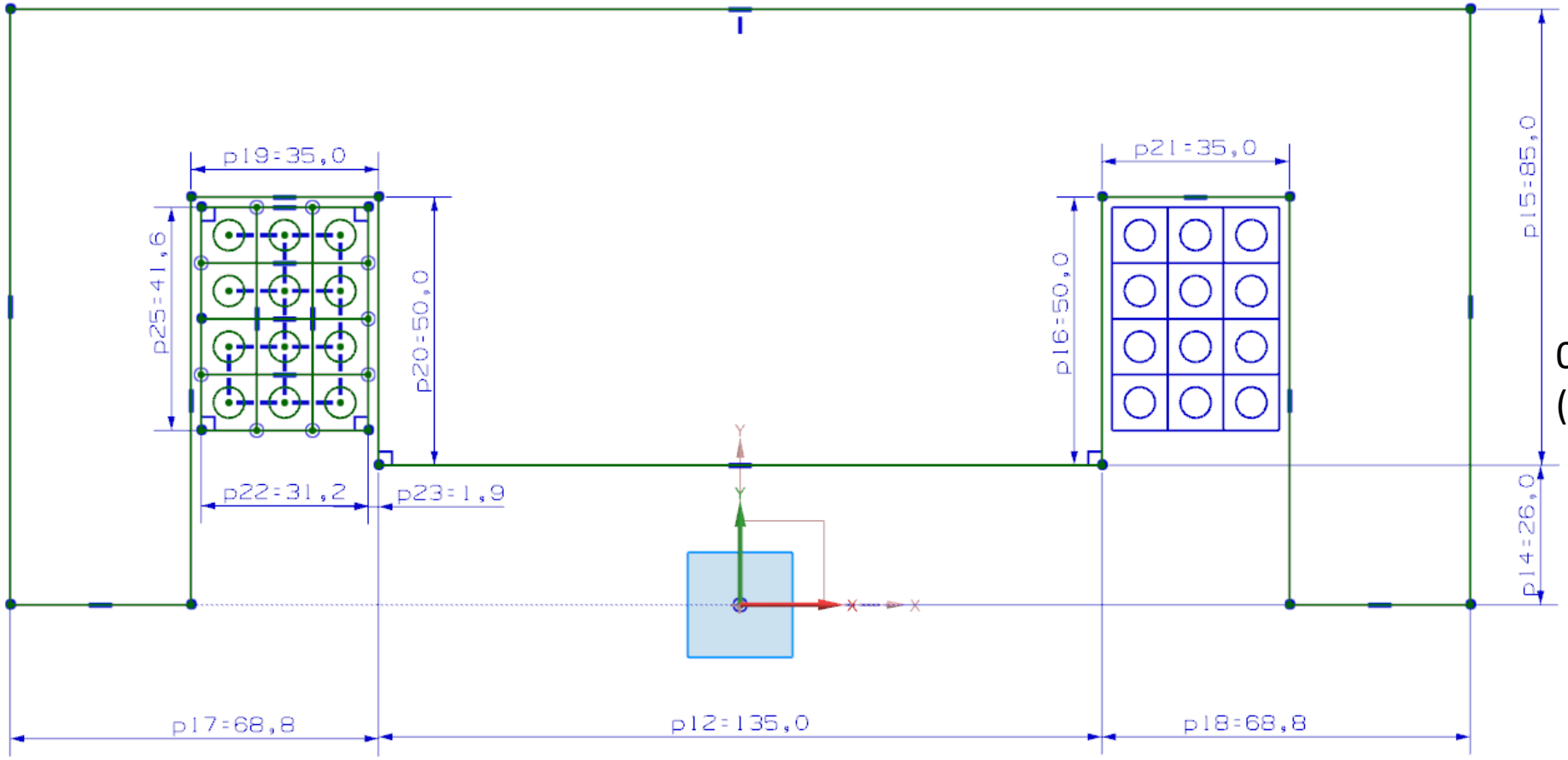

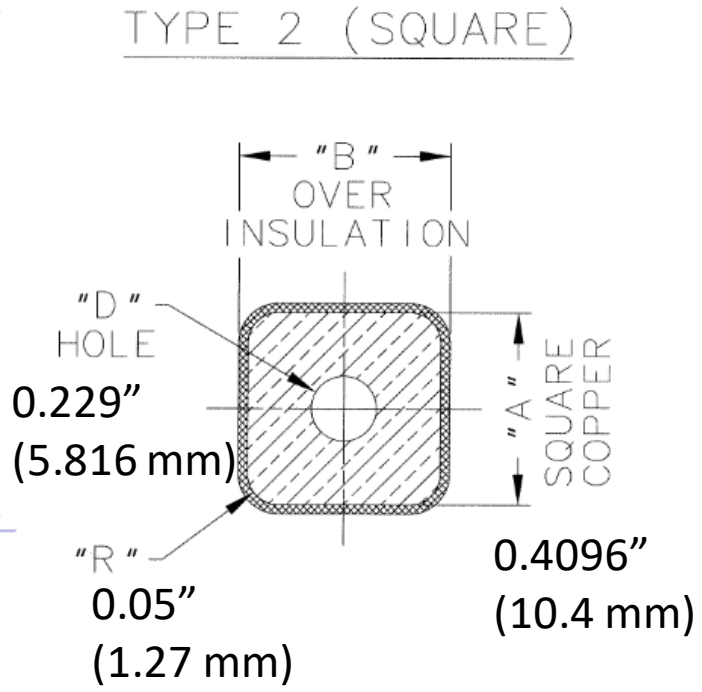

Width = 272.6 mm
Height = 111 mm (half), 222 mm (full)

ANSYS Model

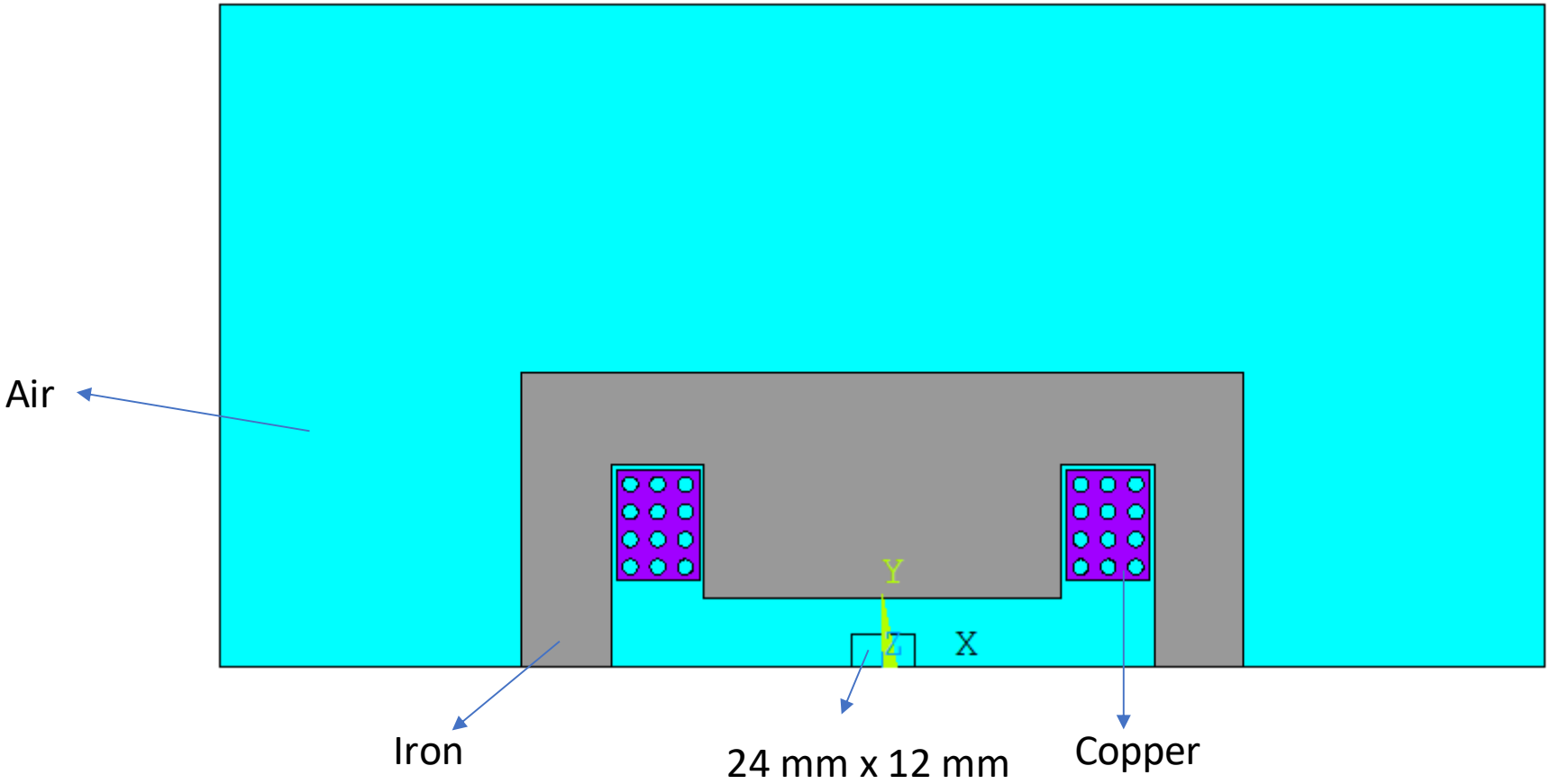

B-H Curve for M15 Steel

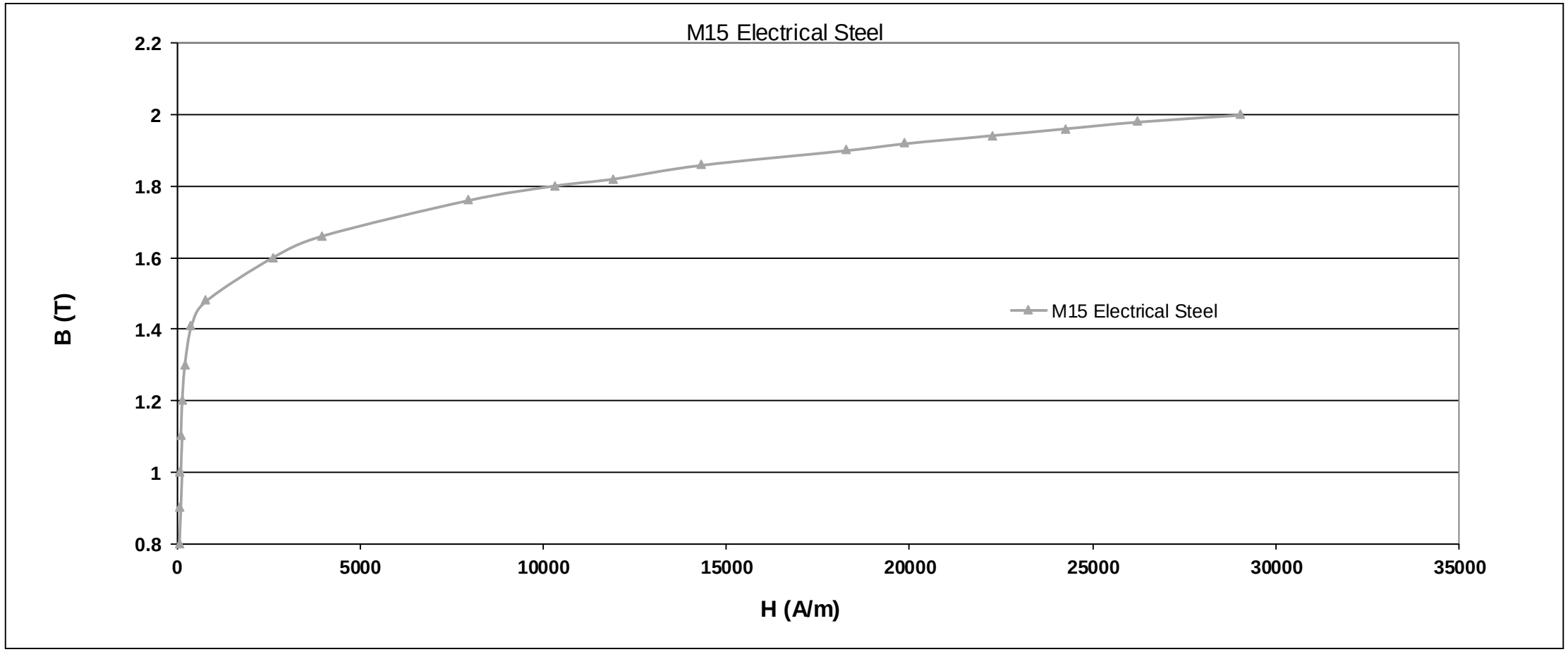

Results

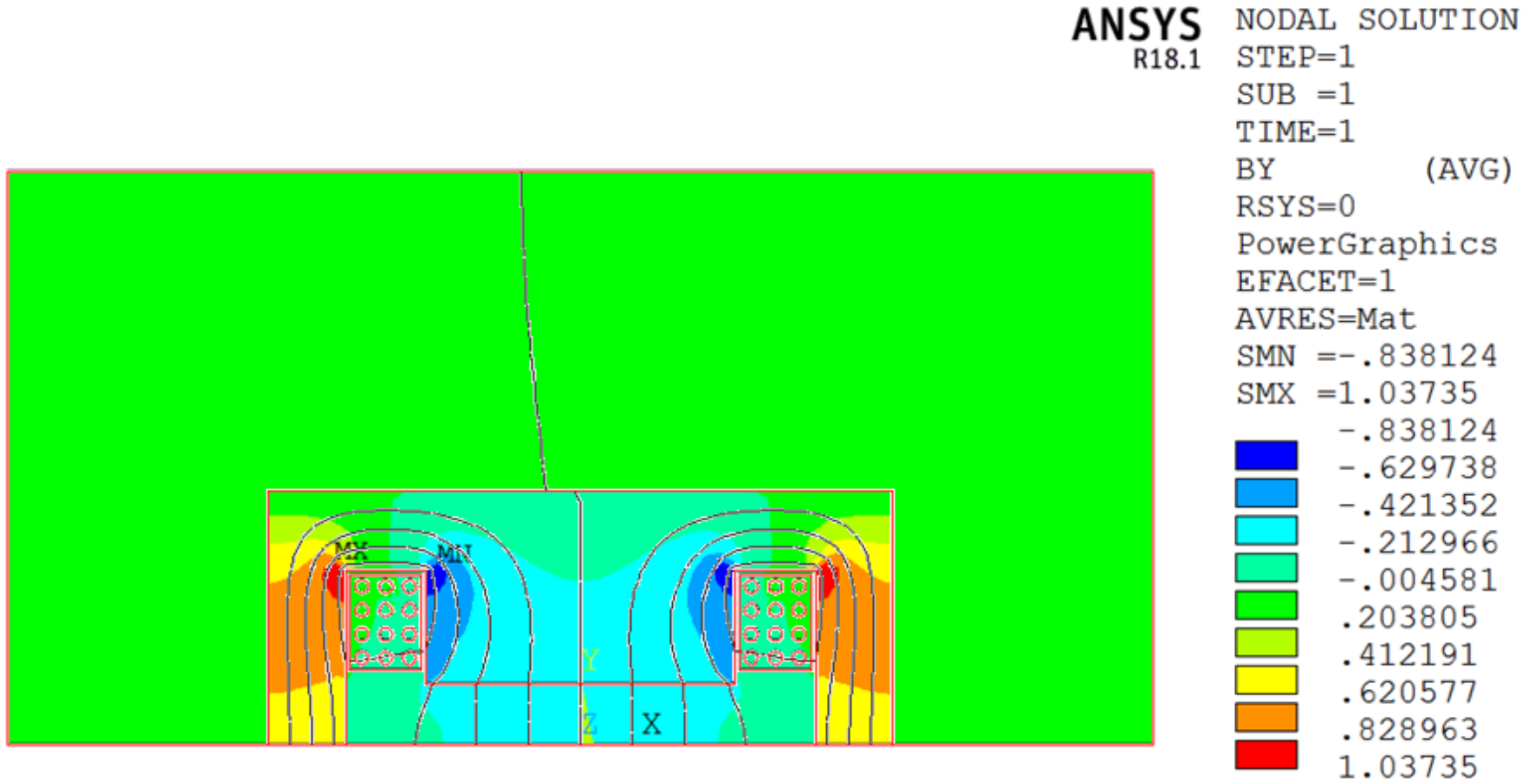
ANSYS
R18.1
NODAL SOLUTION
STEP=1
SUB =1
TIME=1
BY (AVG)
RSYS=0
PowerGraphics
EFACET=1
AVRES=Mat
SMN =-.838124
SMX =1.03735
-.838124
-.629738
-.421352
-.212966
-.004581
.203805
.412191
.620577
.828963
1.03735
Y
Z
X

Good field Region

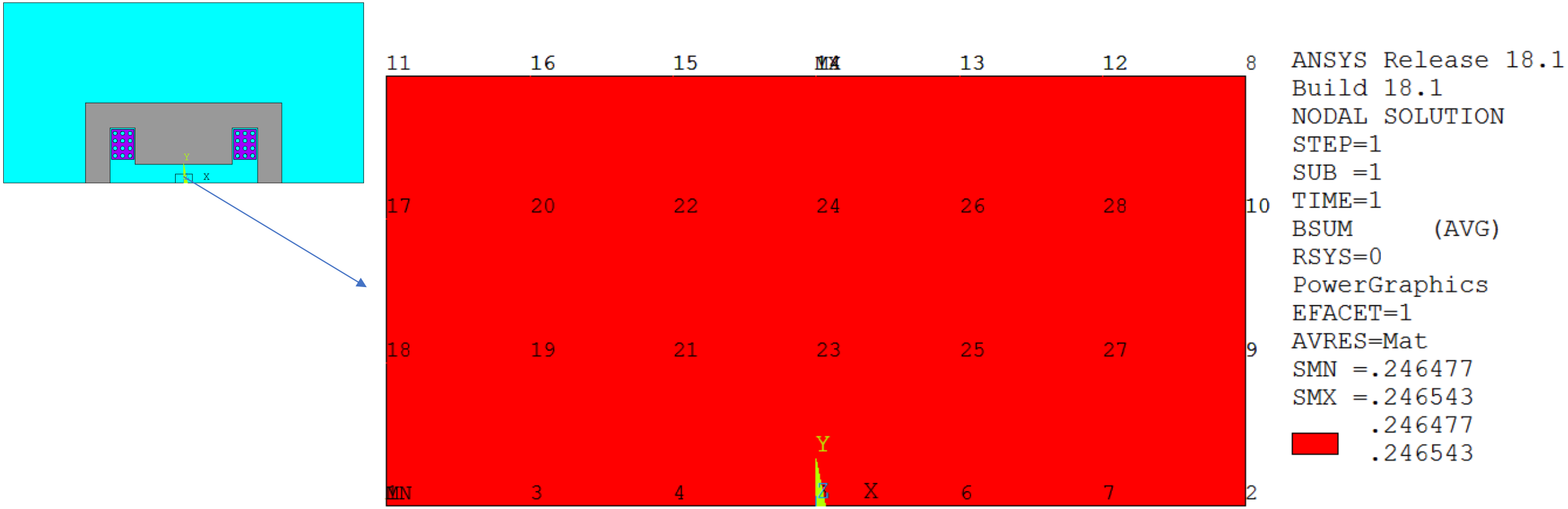

B_0 = -0.24651 T

dB/B = 0.013% < 0.02%

Design Table and Parameters

	Number of Turns	Cable Length (m)	Resistance (Ω)	Current (A)	Power Loss (kW)	Inductance (mH)
Upper/Lower Coil	12	64	0.013	420	2.354	2.27

Water Cooling proposal

- Reference: MLAW magnet (F10089535) and MLG magnet (F10014842)
- Water cooling from the middle of each coil (2 coils for upper/lower)
- Assume water pressure 60 psi, water velocity is calculated as 2.336 m/s, flow rate Q = 0.062 liter/s, $\Delta T = 2.28°C$