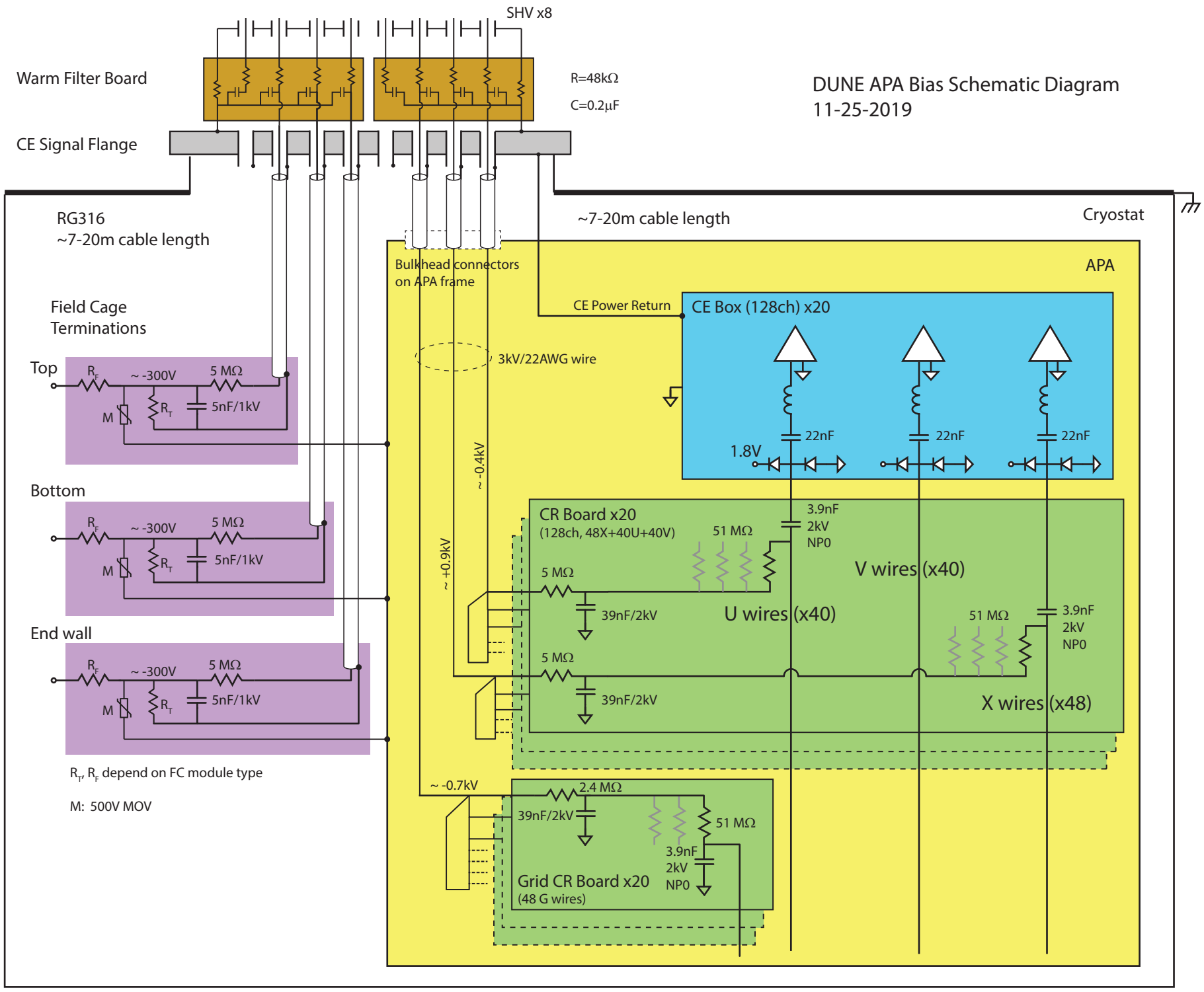
DUNE APA Bias Schematic Diagram
11-25-2019
SHV x8
Warm Filter Board
R=48kΩ
C=0.2μF
CE Signal Flange
RG316
~7-20m cable length
~7-20m cable length
Cryostat
Bulkhead connectors
on APA frame
APA
CE Power Return
CE Box (128ch) x20
3kV/22AWG wire
22nF
22nF
22nF
1.8V
~ -0.4kV
~ +0.9kV
Field Cage
Terminations
Top
Bottom
End wall
~ -300V
5 MΩ
5nF/1kV
M
CR Board x20
(128ch, 48X+40U+40V)
51 MΩ
3.9nF
2kV
NP0
V wires (x40)
5 MΩ
39nF/2kV
U wires (x40)
51 MΩ
3.9nF
2kV
NP0
5 MΩ
39nF/2kV
X wires (x48)
R_T, R_F depend on FC module type
M: 500V MOV
~ -0.7kV
2.4 MΩ
39nF/2kV
51 MΩ
3.9nF
2kV
NP0
Grid CR Board x20
(48 G wires)