CEA

Olivier Napoly, Technical Coordinator

DOE CD-2/3a Independent Project Review

January 28-30, 2020

In partnership with:

- India/DAE
- Italy/INFN
- UK/STFC
- France/CEA/Irfu, CNRS/IN2P3
- Poland, WUST

A few words about me

Olivier Napoly

PhD 1983

Senior Scientist at CEA/DRF/Irfu/DACM

Project leader of Eu-XFEL Cryomodule Assembly at CEA

Visiting Scientist: CERN (1988-89, 1991-92), SLAC (1995-96)

Guest Scientist at Fermilab (2017-18)

PIP-II Project Coordinator for CEA

Outline

- Expertise and Capabilities
- Scope/Deliverables
- Technical Progress to Date
- Schedule
- Risk Management
- ESH&QA
- Summary

1. Does the proposed technical design satisfy the performance requirements? Do the Key Performance Parameters (KPP's) provide a satisfactory indication of the project's completeness?
2. Are the interfaces to the existing accelerator complex identified and defined? Do the planned hardware upgrades to the existing complex fully support the ultimate performance goal of 1.2 MW operation of the complex?
3. Is the resource-loaded schedule complete, consistent and credible so that it can serve as the cost and schedule part of the project's performance baseline? Is it compatible with the funding guidance provided by High Energy Physics? Have the project's risks been fully analyzed and accounted for in the contingency estimate?
4. Is the project team properly staffed with individuals that have the required skills to deliver the proposed technical scope within the baseline budget and schedule?
5. In-kind international contributions are described in bi-lateral agreements called Project Planning Documents (PPD's). Does the project baseline and in-kind scope contributions defined in the PPD's present the complete scope required to meet the KPP's? Are the delivery dates for in-kind scope sufficiently understood to establish the credibility of CD-4 date? Does the Project have a credible plan for managing the deliverables including acceptance, Q/A, and risk management.
6. Does the project have a certified Earned Value Management System and have they demonstrated their ability to utilize it as an effective project management tool?
7. Is the documentation required by DOE Order 413.3B, *Program and Project Management for the Acquisition of Capital Assets* for CD-2 complete and in good order?
8. Are Environment Safety and Health aspects being properly addressed?
9. Has the project responded satisfactorily to the recommendations from the previous independent project review?
10. In regard to CD-3a; is the scope of the 3a package appropriate and justified? Are the associated designs sufficiently mature to support the requested CD-3a cost and schedule? Have the appropriate design reviews been completed?

Expertise and Capabilities

- Accelerator, Cryogenics and Magnet Department (DACM)
  - Accelerator design and beam physics
  - H+/D+ high-intensity sources and injectors

e.g.

ESS RFQ in tunnel: 70 mA H+, 6 MeV, 4.6 m long, 353 MHz

Expertise and Capabilities

- Accelerator, Cryogenics and Magnet Department (DACM)
  - Superconducting magnet design and fabrication
  - High-field SC magnets tests

e.g.

NeuroSpin/ISEULT
11.7 T full-body MRI

JT-60SA Tokamak
20 coils, 15 tons, 4.5 K, 27.5 kA

Expertise and Capabilities

Charge #5

- Accelerator, Cryogenics and Magnet Department (DACM)
  - Superconducting cavities and cryomodule design
  - Cavity and cryomodule RF tests

e.g. Spiral 2
12 QWR, 88 MHz

ESS
9 +21 elliptical CMs, 704 MHz

Expertise and Capabilities

Charge #5

CEA Technology Infrastructure (25 000 m^2)

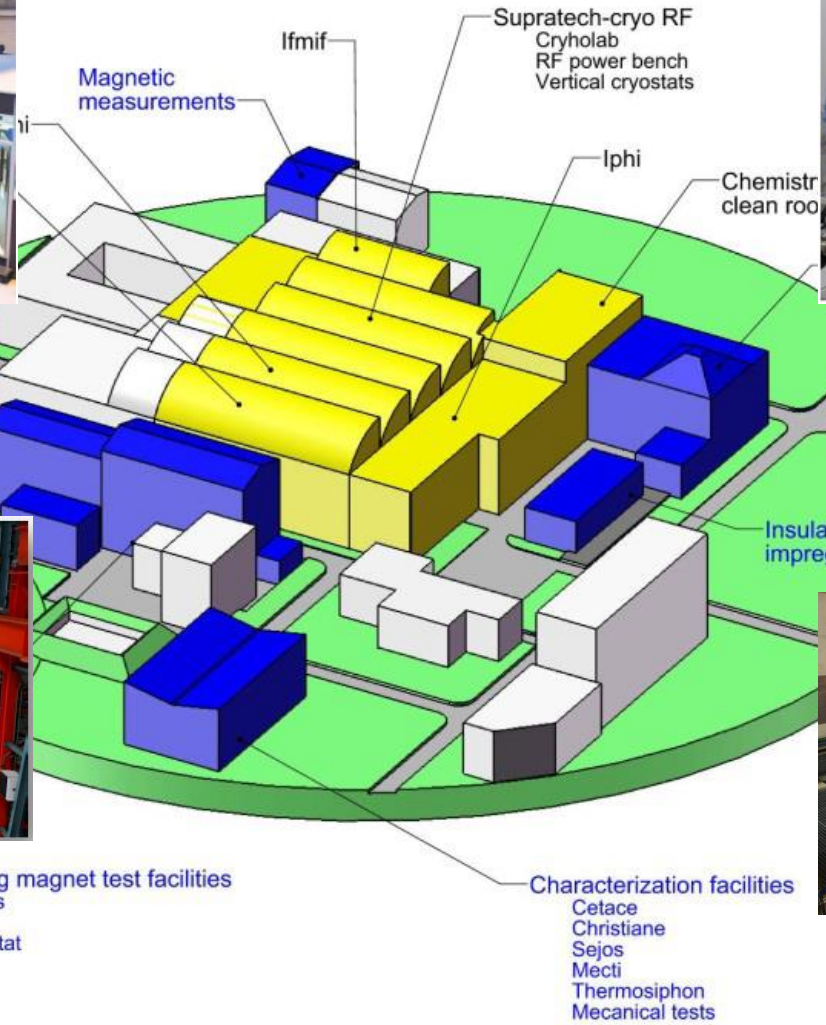

Scope and Deliverables

Charge #5

Subject to decision on funding, CEA is aiming at the following scope of work:

- **Design of LB650 cryomodule**, after collaborating to the HB650 cryomodule design with Fermilab
- **Co-Design of the 650 MHz RF couplers**, with Fermilab
- **Procurement and conditioning of 650 MHz RF couplers**
- **Procurement of LB650 tuners**
- **Procurement of all cryomodule parts** (vacuum vessels, strongbacks, thermal shields, magnetic shields, cryogenic parts, instrumentation, etc.) except RF cavities
- **String and module assembly** of one prototype LB650 (CM0) and of 9 production LB650 cryomodules (CM1-9)
- **Qualification cold RF tests** of 1+9 LB650 cryomodules

CEA Project Management

Charge #5

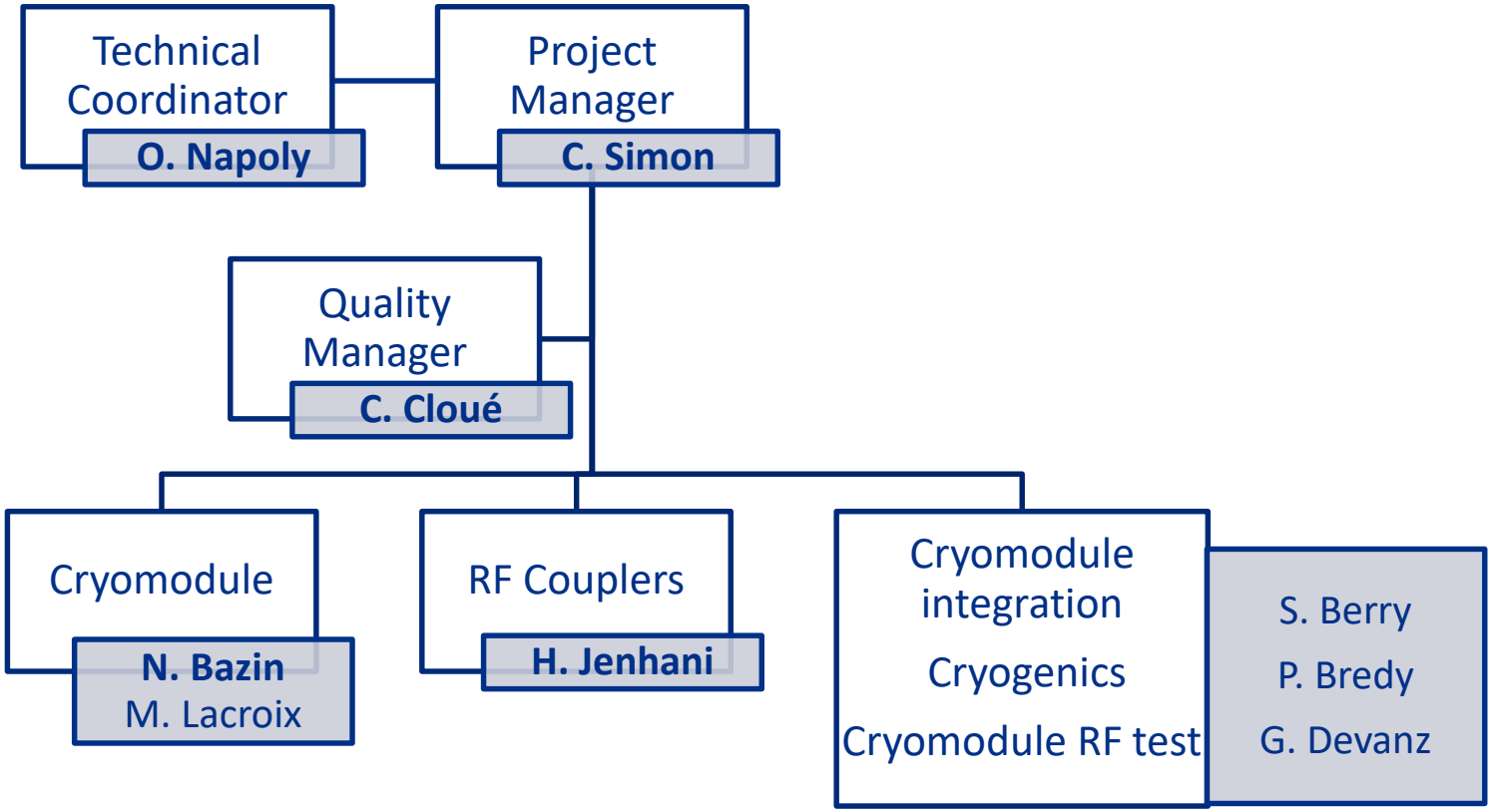

The team will grow steadily when funding is 'secured'.

An internal CEA kick-off meeting will be organized to *baseline* the PIP2@CEA project in terms of manpower resources, budget profiles, schedule, risks, and organizational matters (QA, safety).

Technical Progress to Date

Charge #5

- HB650 and LB650 Cryomodules
  - Design of a strong-back system for HB650 CMs
    - Possibility of segmenting in six 1 m long modules
    - Interface with Vacuum Vessel studied (columns, wheels)
  - Strategy for roll-over assembly of VV (wheels/rails)
    - Specification on strong-back rigidity
    - Specifications of wheels. vs. rails machining accuracy

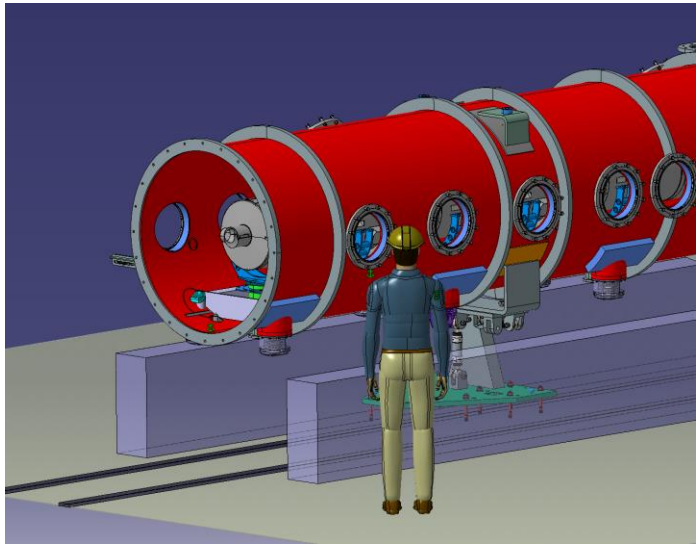

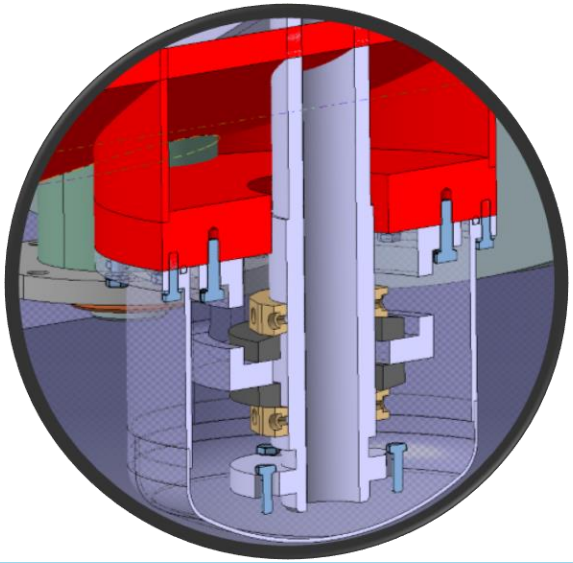

Technical Progress to Date

Charge #5

- 650 MHz RF Couplers
  - Study of RF conditioning strategy
  - Study of vacuum monitoring and interlock

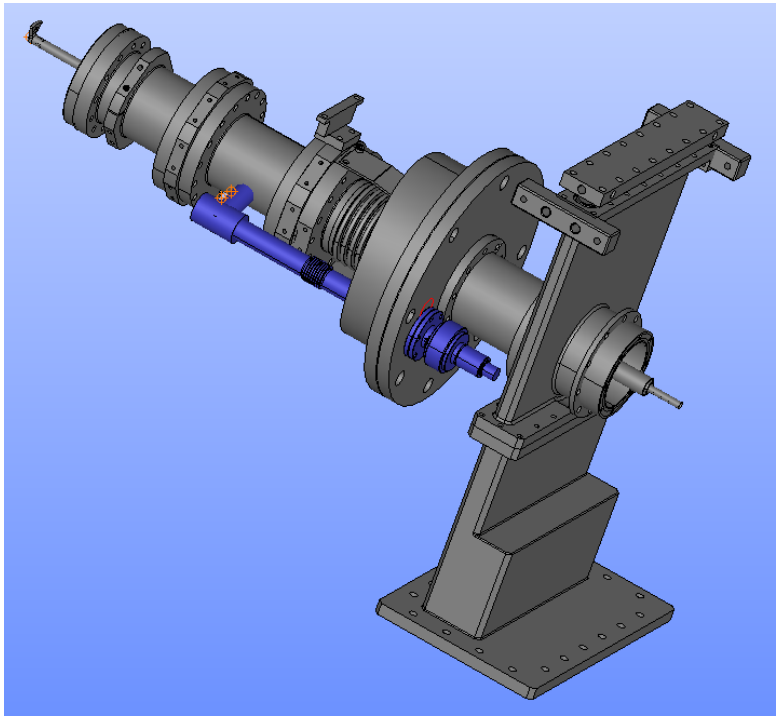

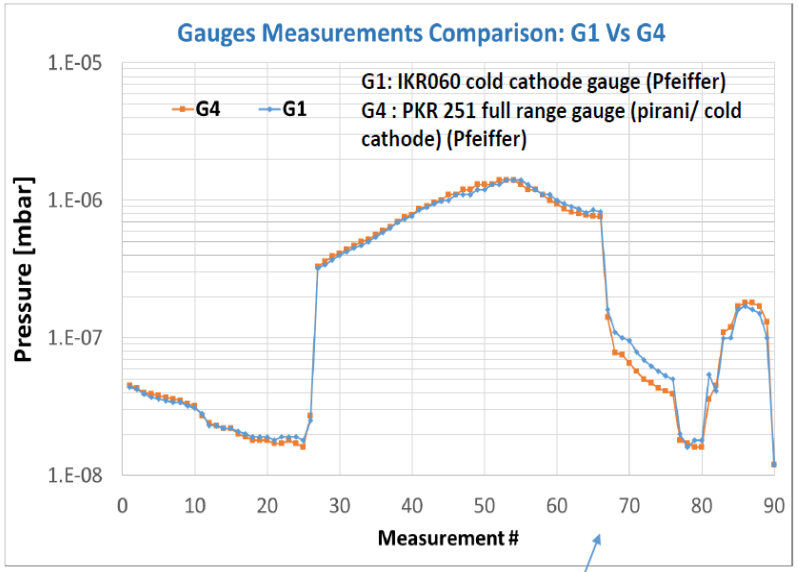

Isolation vacuum was always less than 5E-8 mbar

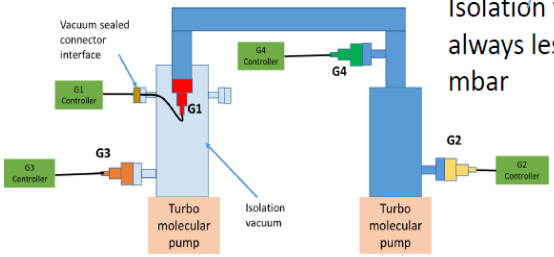

7

Technical Progress to Date

Charge #5

- Cryogenics and RF Test
  - Implantation study on ESS cave
  - Existing cryogenics plant cooling power and He flow

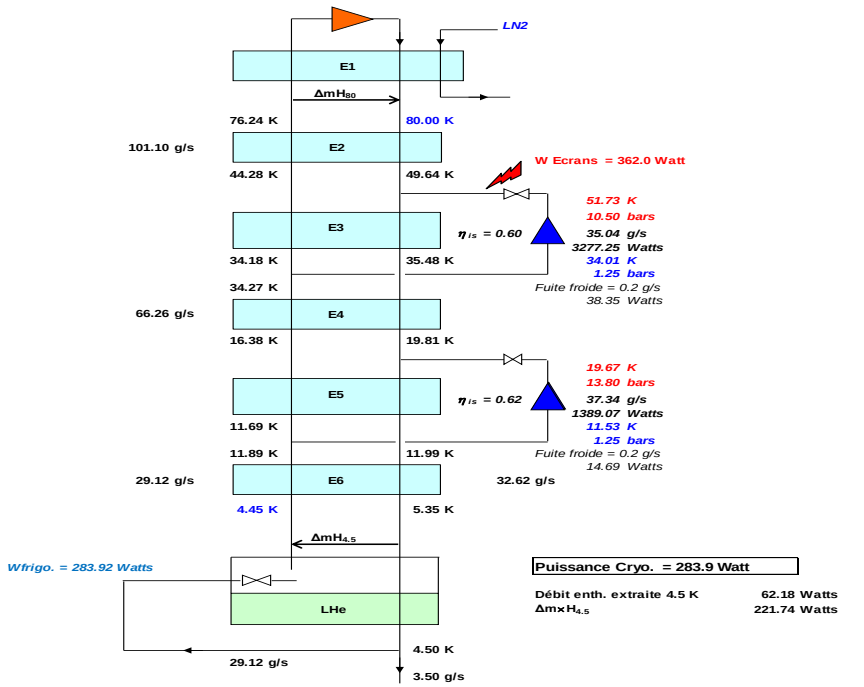

Caractéristiques Échangeurs		Pertes (W)
HS1 (W/K)	-	-
HS2 (W/K)	3685	30
HS3 (W/K)	1883	10
HS4 (W/K)	2943	30
HS5 (W/K)	1293	10
HS6 (W/K)	1580	15

Bilan entre le bout chaud de E2 et le bout froid de E6

Apports enthalpiques (W)		Puissance extraite (W)	
Pertes HX	95.00	Turb. chaude	3277.25
$\Delta m \times H_{4.5}$	221.74	*Fuite*	*38.35*
$\Delta m \times H_{80}$	4040.62	Turb. froide	1389.07
Ecrans	362	*Fuite*	*14.69*
Total	**4719.36**	**Total**	**4719.36**

Schedule

Charge #5

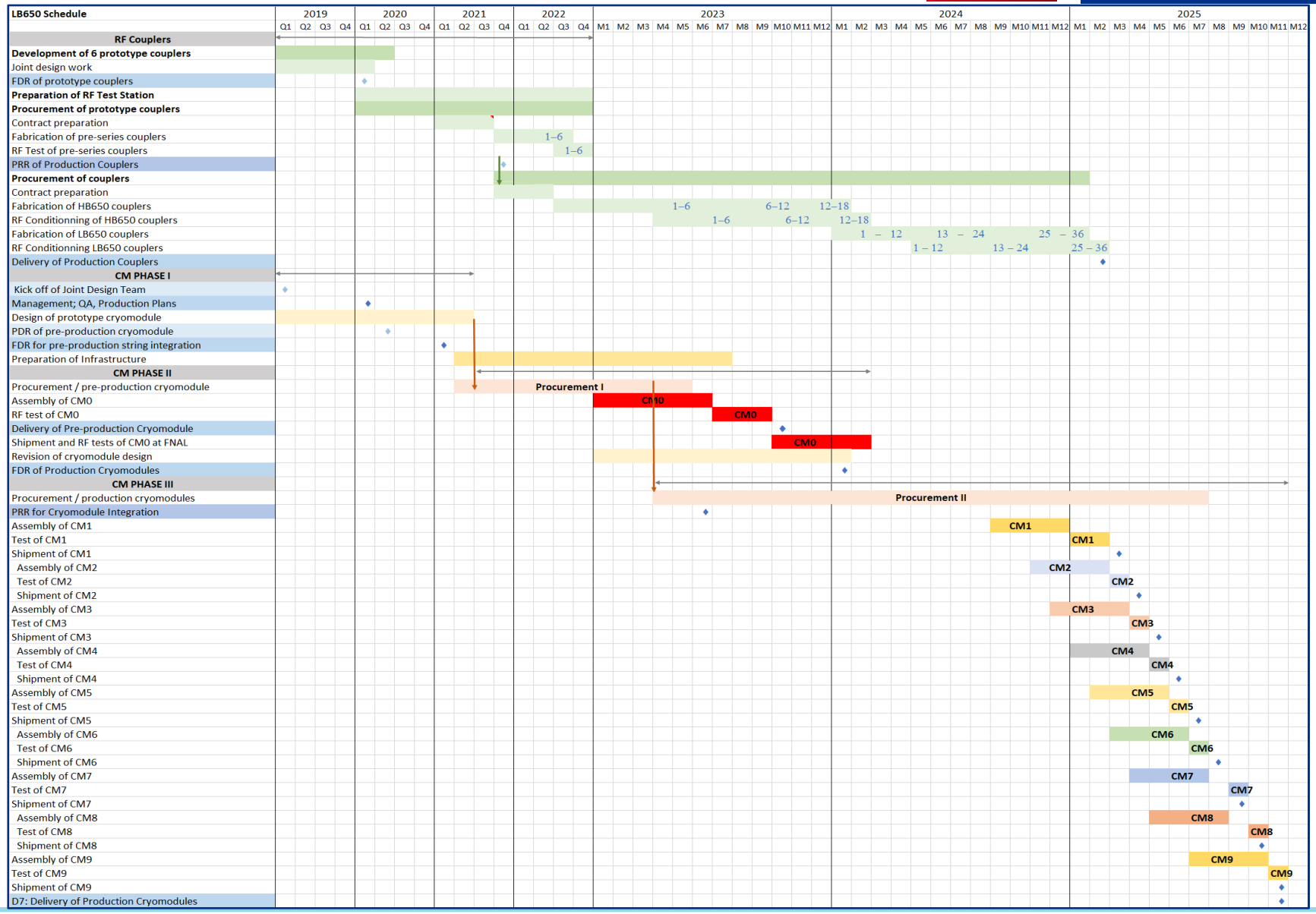

Schedule

Charge #5

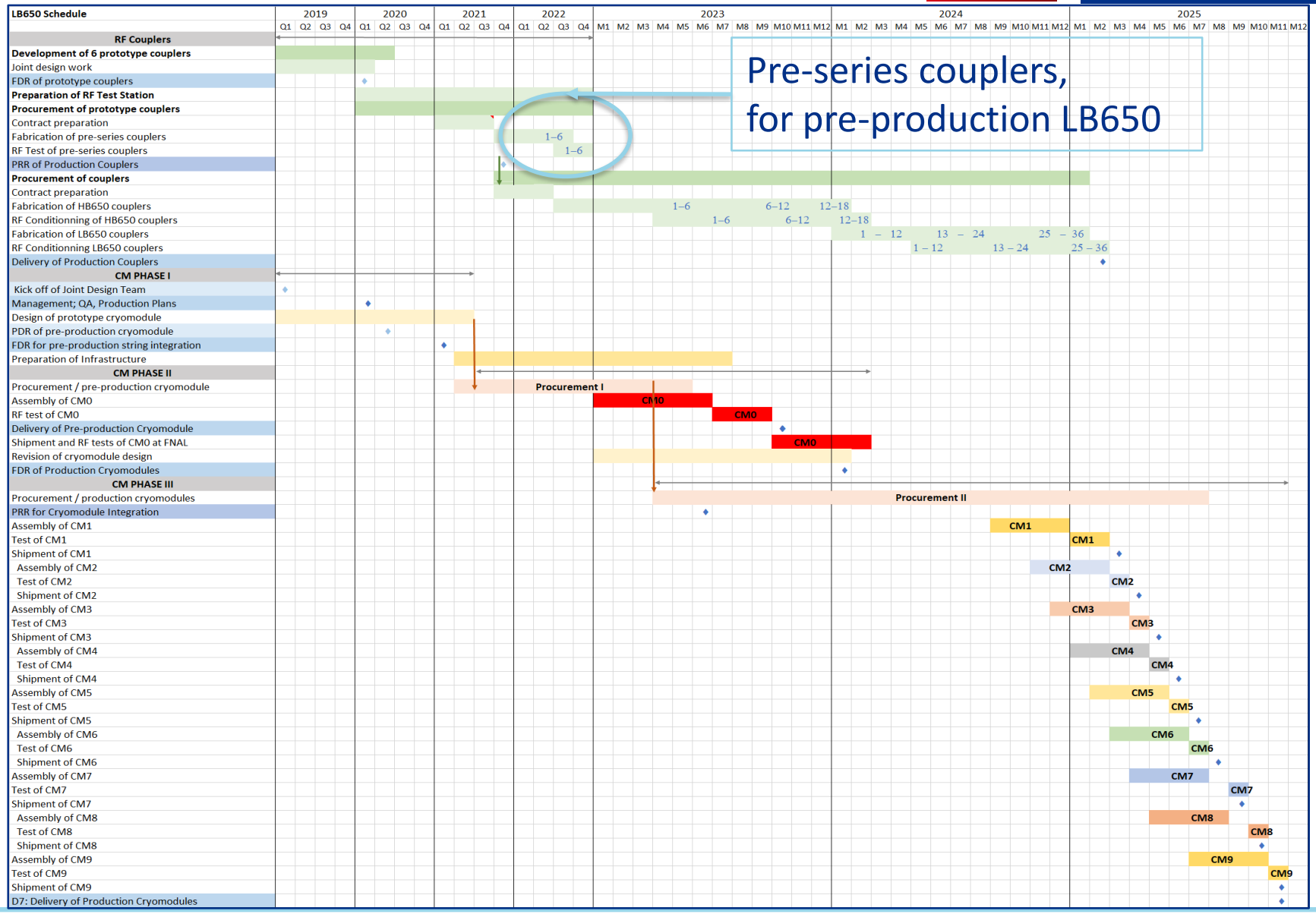

Pre-series couplers,
for pre-production LB650

Schedule

Charge #5

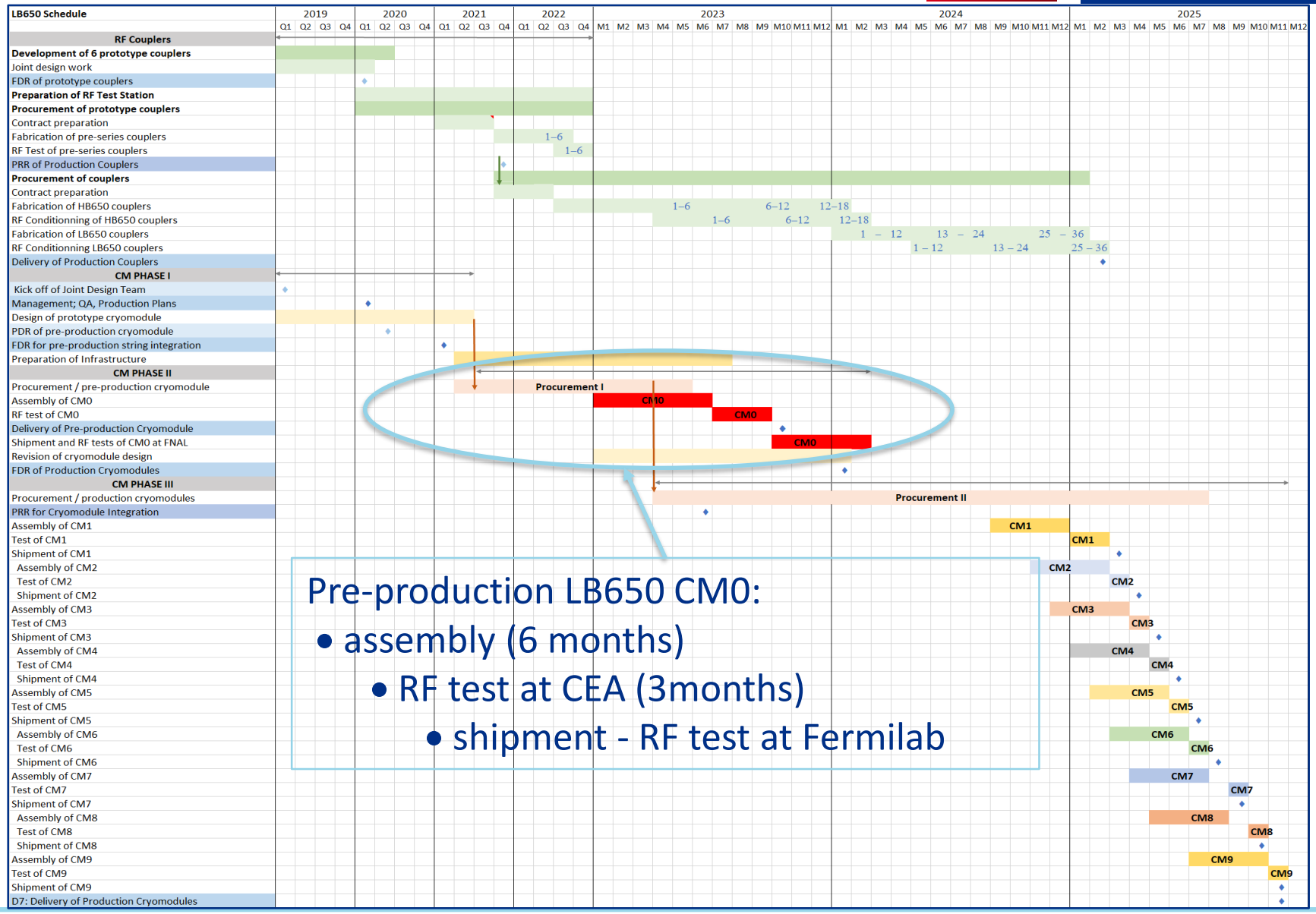

Pre-production LB650 CM0:

- assembly (6 months)
  - RF test at CEA (3months)
    - shipment - RF test at Fermilab

Schedule

Charge #5

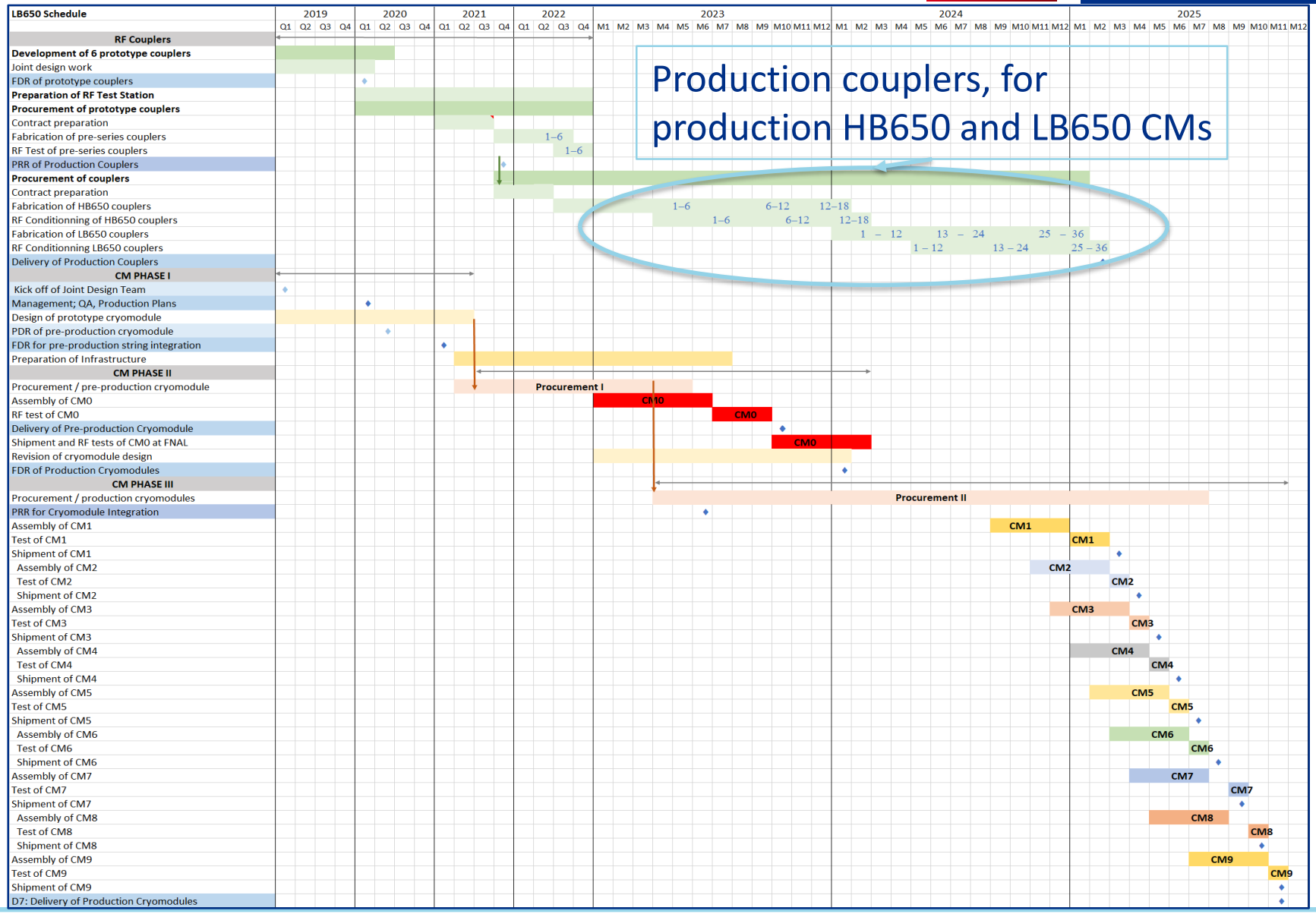

Production couplers, for production HB650 and LB650 CMs

Schedule

Charge #5

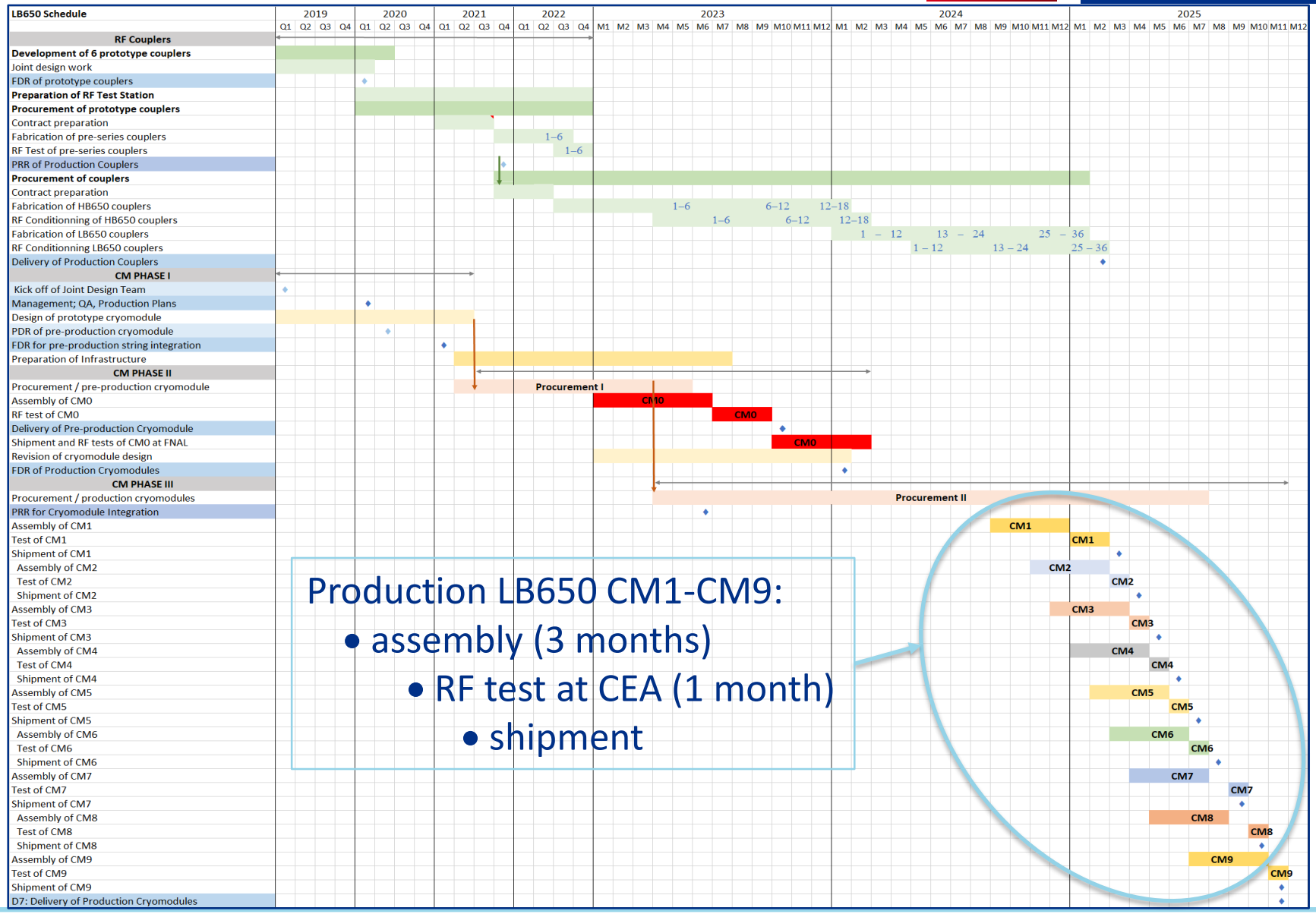

Risk Management

Charge #5

The main **E**xternal and **I**nternal risks identified by CEA are :

- **E1**: ESS cryomodule production schedule delays, past 2022.
  - The assembly of 30 ESS cryomodules (9 MB704 and 21 HB704) by CEA at Saclay until 2022 paves the way for the further assembly of 10 LB650 cryomodules, and retires organizational and technical risks.
- **E2**: Delays in the delivery of qualified cavities.
- **I1**: Delays in the production and acceptance of critical components: RF couplers, vacuum vessels, etc…
- **I2**: Complexity of PED certification (organization and cost of non-destructive tests).

CEA has dealt with similar risks during SPIRAL2, EU-XFEL and IFMIF project execution. Risk mitigation plan will be prepared and presented at the CEA Kick-off meeting.

ESH: Safety Organisation by Site

Charge #5

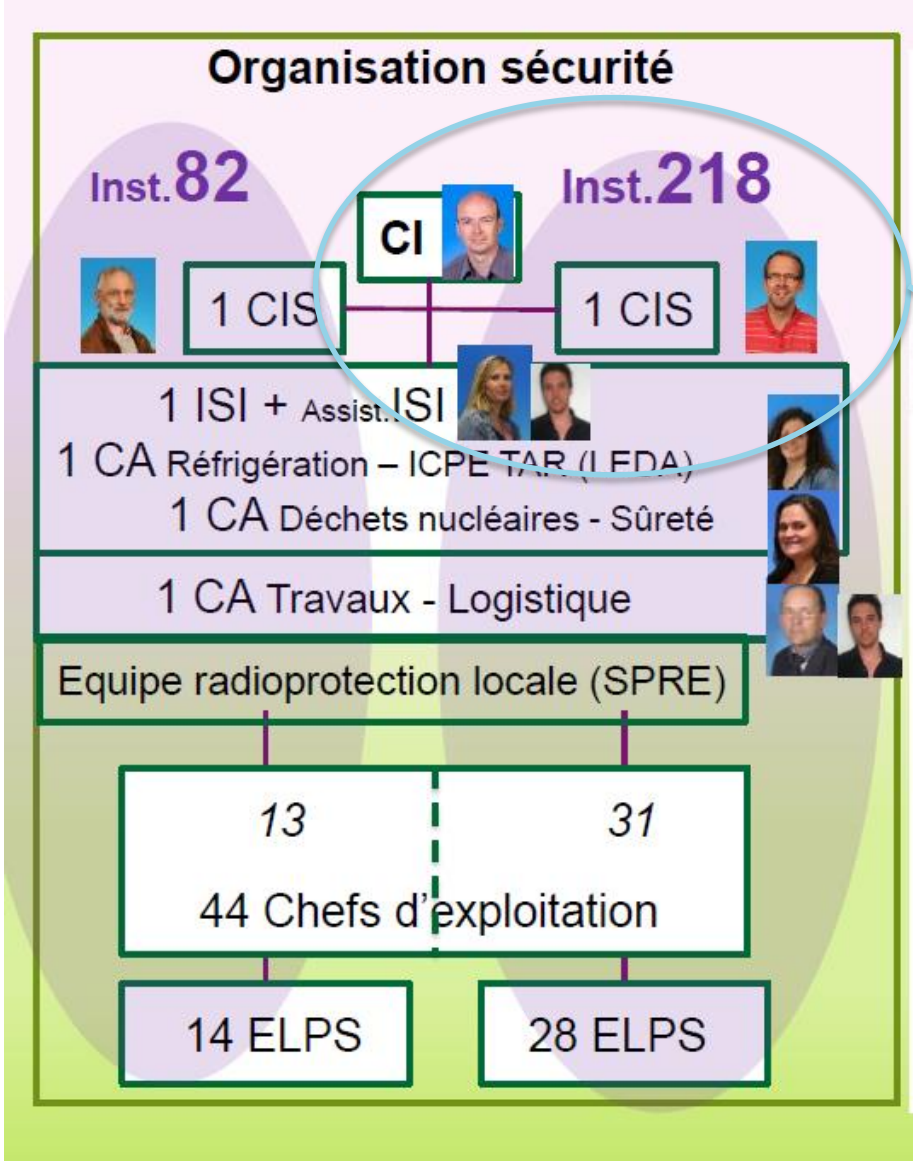

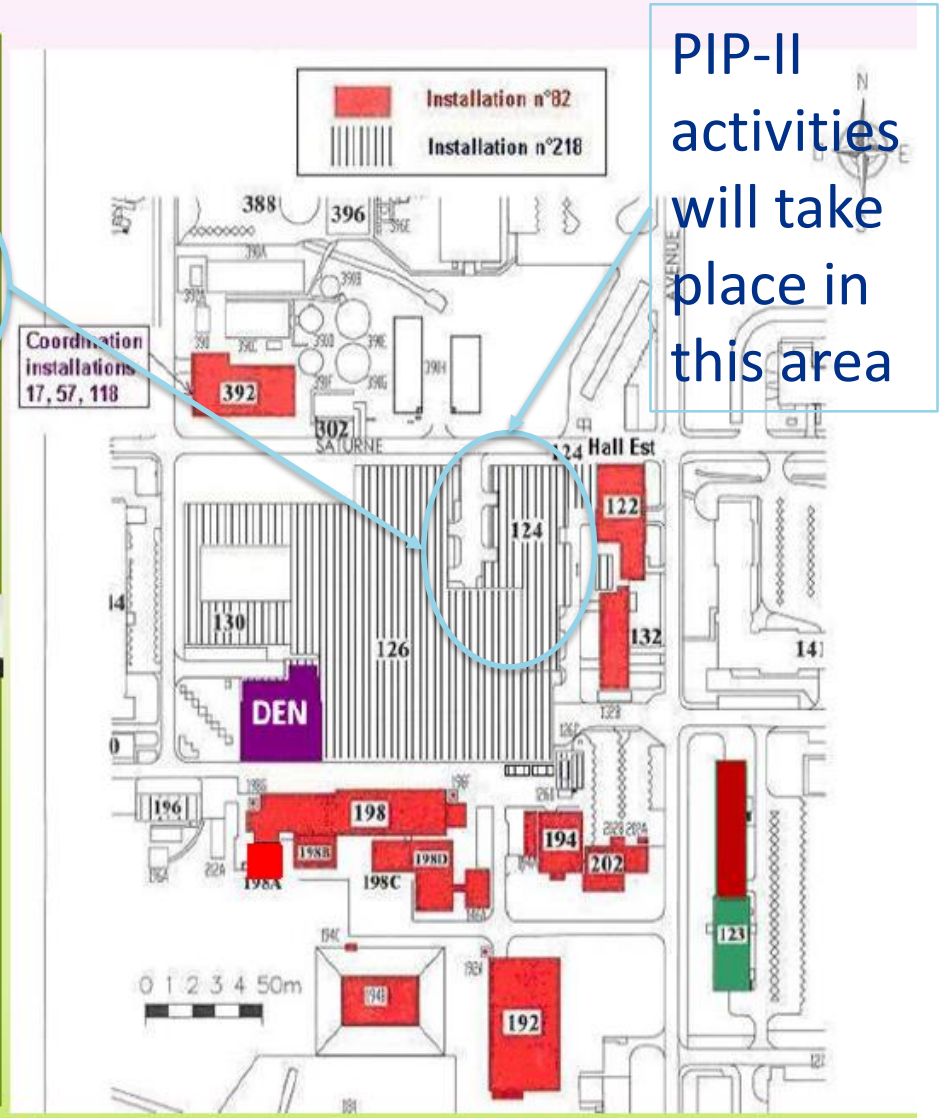

PIP-II activities will take place in this area

ESH

Charge #5

CEA Safety Analysis and Hazard Prevention

- Prototyping Phase
  - Safety studies of existing workstations
  - PIP-II safety study for project authorization by the CEA-Saclay central 'Safety Local Commission' (CLS)
    - Radiation protection safety
    - Pressurized vessel equipment (PED) safety
- Industrial Production Phase
  - Safety and environmental requirement for PIP-II specifications
  - PIP-II safety study for project authorization by the CEA-Saclay central 'Safety Local Commission' (CLS)
  - ESH Plan with the selected industrial contractor.

ESH

Charge #5

CEA Safety Management during Exploitation Phase

- General safety rules and procedures (e.g. PPE)
- Safety training plan and medical supervision
- Team leader and deputy for each exploitation station
- Pre-authorization form to start testing
- Safety inspection and safety drills
- Regulatory periodic controls of equipment
- Co-activity oversight:
  - Bi-monthly meetings for manage exploitation and prevent interferences
  - Quaterly meetings for Technology Infrastructure land use
  - Construction works and logistics oversight by ESH teams

QA

CEA has well a established QA team and QA practice, e.g. ESS.

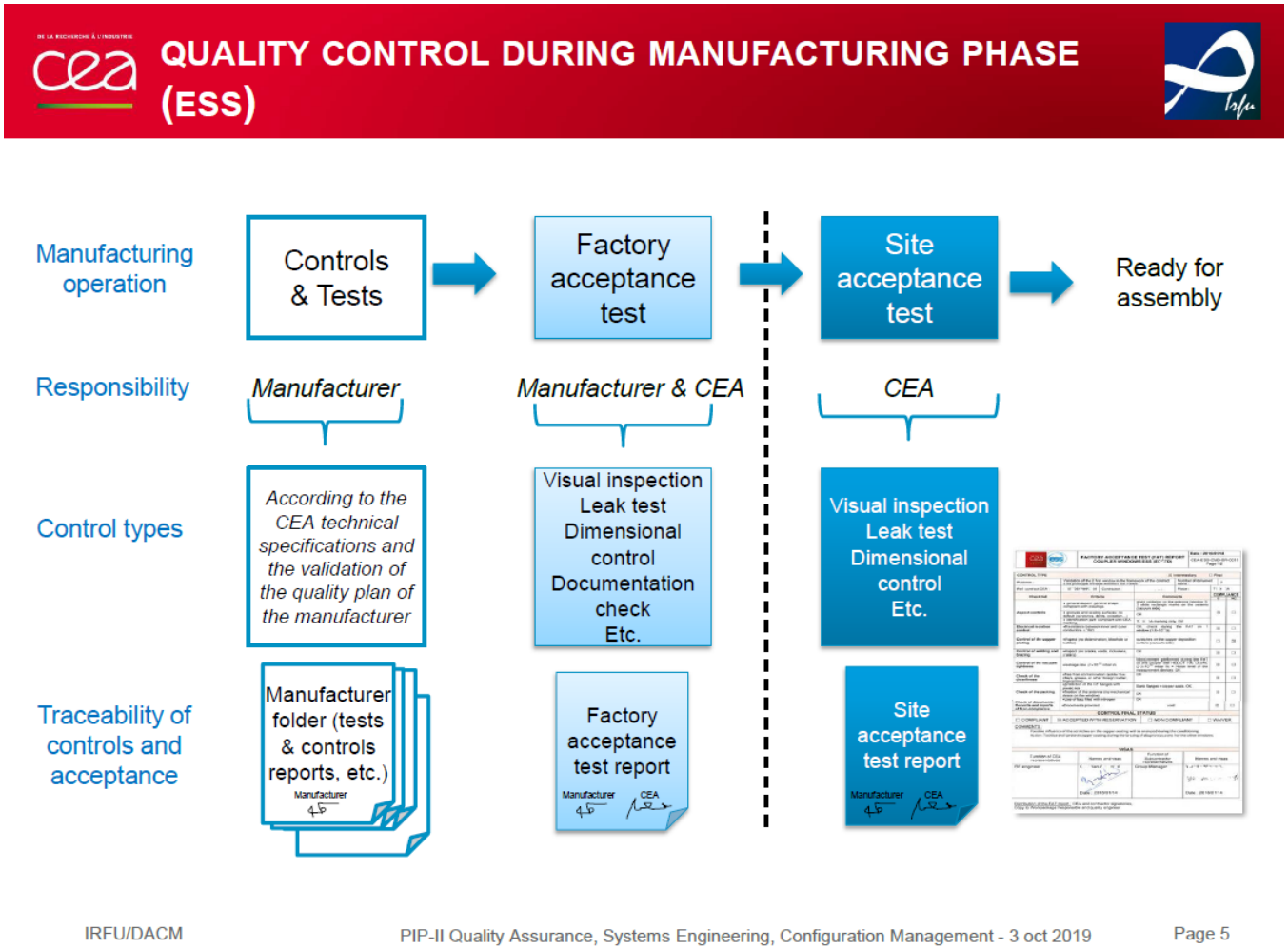

QA

Charge #5

- The participation of CEA to ‘mega-project’, like EU-XFEL, has demonstrated the critical importance of a powerful and rigorous QA/QC implementation for the project compliance to performance, schedule and cost.
- CEA is fully aware of the importance of configuration management, traceability and (early) detection of non-conformances.
- In practice CEA adapts its QA/QC implementation to the QA methods and tools provided by the project (e.g. TeamCenter).
- Actually, the ESS-CEA QA plan for cryomodule assembly was influential to the development of the PIP-II QA plan.
- Liaison with FNAL QA office is effective and ongoing. Several meetings were organized at Fermilab and at Saclay in 2019.
- The QA plan for the CEA In-Kind contribution is under work.

Summary

- DUNE, including PIP-II, is making its way to the French roadmap of large research infrastructures, with the joint commitment of CEA and IN2P3.
- PIP-II accelerator development and construction is supported by CEA at the highest priority. It is an opportunity for CEA.
- CEA has been a key partner in the construction of SRF linacs such as SPIRAL2 and EU-XFEL, and is currently involved in the construction of IFMIF, SARAF.
- The construction of ESS, in partnership with IN2P3, INFN and STFC, is a strong advantage for the PIP-II project.
- The current CEA team is highly competent and motivated.
- PIP-II work started already.