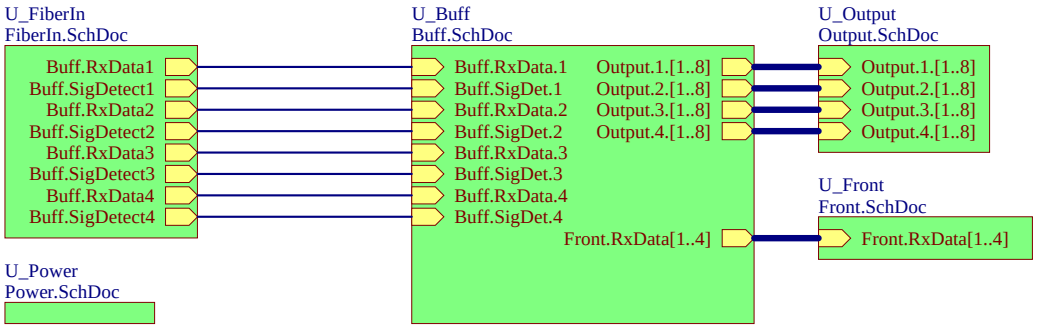

Fermilab

Operated by Fermi Research Alliance, LLC under Contract No. DE-AC02-07CH11359 with the United States Department of Energy.

Size	Rev	FiberSMtoTTLReceiver	ENGINEER: Mark Austin
A	B		DRAWN: Mark Austin
Number *	Date: 8/18/2020 Time: 10:40:36 AM	Sheet 1 of 6	CHECKED: * APPROVED: *

Z:\Altium\FiberSMtoTTLReceiver\FiberSMtoTTLReceiver.SchDoc

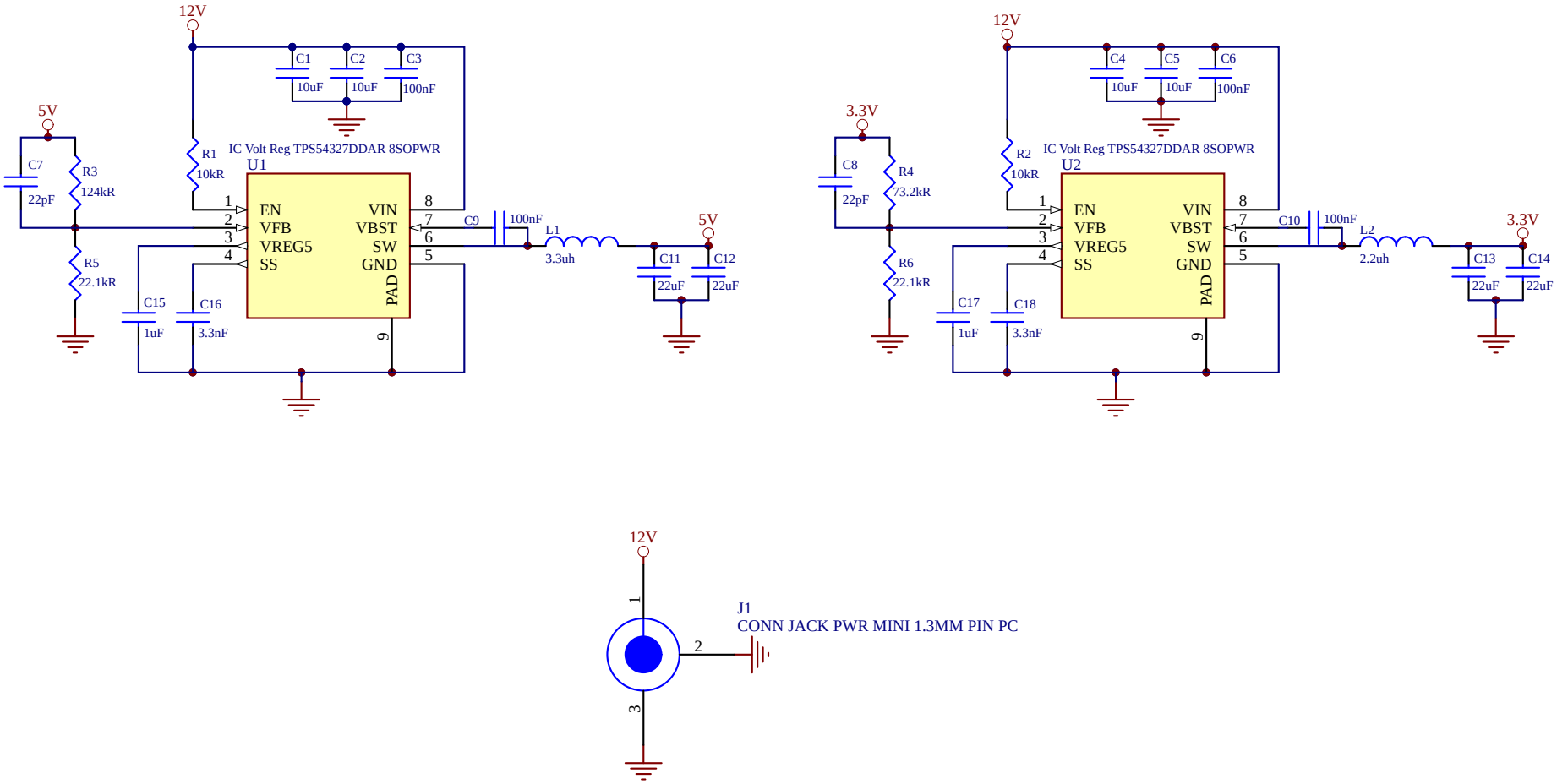

Fermilab

Operated by Fermi Research Alliance, LLC under Contract No. DE-AC02-07CH11359 with the United States Department of Energy.

Size	Rev	Power	ENGINEER: Mark Austin
A	B		DRAWN: Mark Austin
Number *	Date: 8/18/2020 Time: 10:40:36 AM	Sheet 2 of 6	CHECKED: * APPROVED: *

Z:\Altium\FiberSMtoTTLReceiver\Power.SchDoc

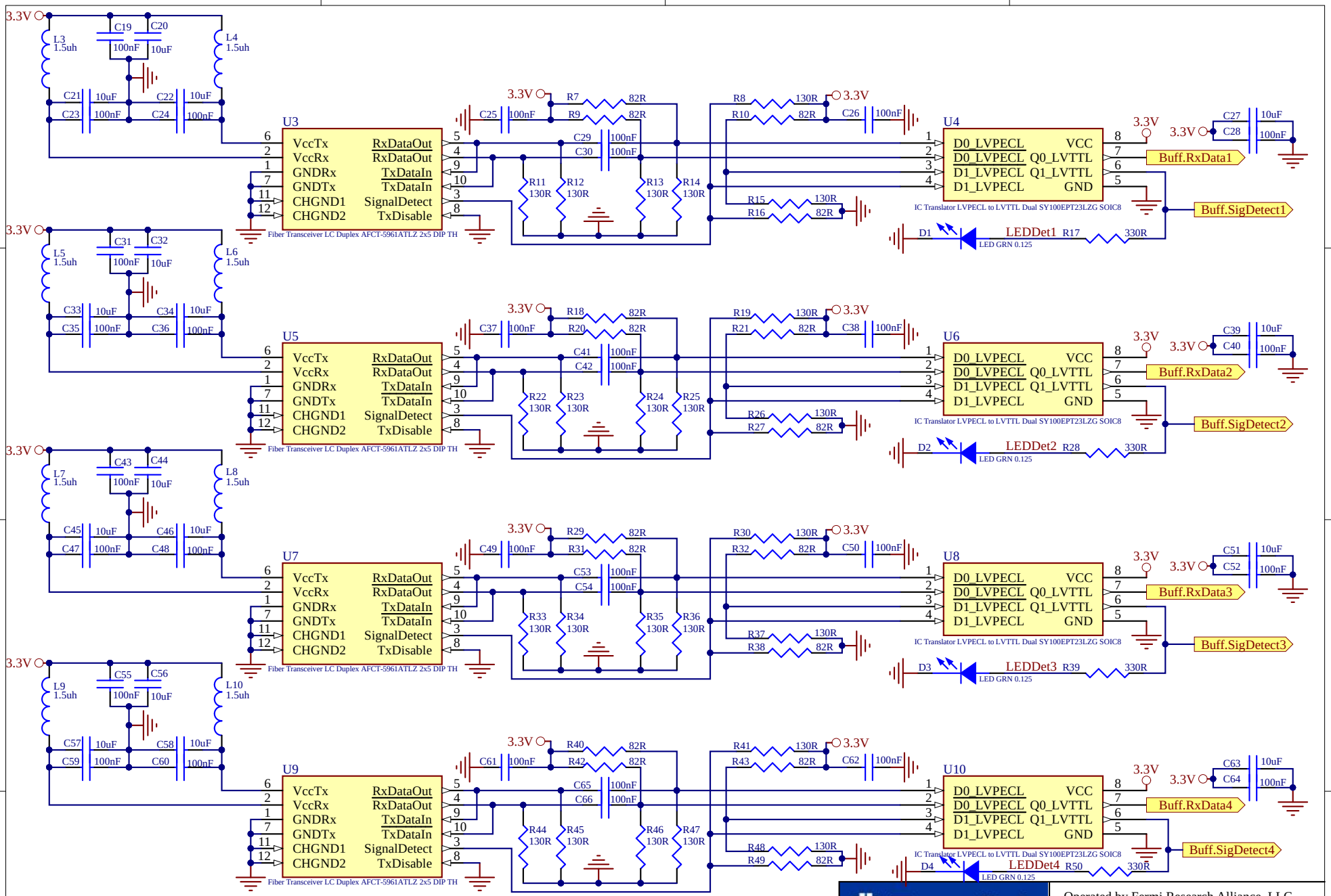

Fermilab

Operated by Fermi Research Alliance, LLC under Contract No. DE-AC02-07CH11359 with the United States Department of Energy.

Size	Rev	FiberIn	ENGINEER: Mark Austin
A	B		DRAWN: Mark Austin
Number *	Date: 8/18/2020 Time: 10:40:36 AM	Sheet 3 of 6	CHECKED: * APPROVED: *

Z:\Altium\FiberSMtoTTLReceiver\FiberIn.SchDoc

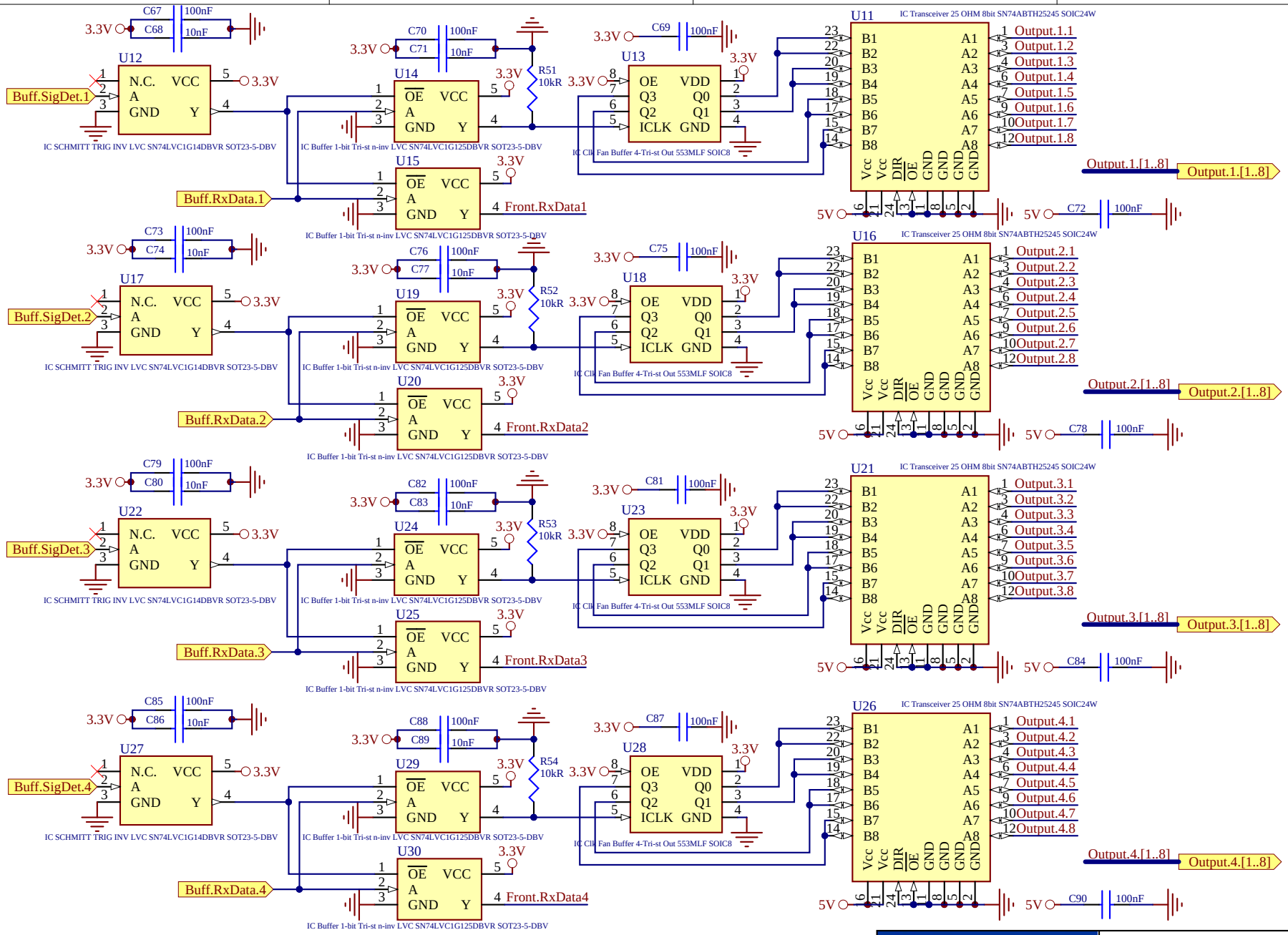

Fermilab

Operated by Fermi Research Alliance, LLC under Contract No. DE-AC02-07CH11359 with the United States Department of Energy.

Size	Rev	Buff	ENGINEER: Mark Austin
A	B		DRAWN: Mark Austin
Number *	Date: 8/18/2020 Time: 10:40:37 AM	Sheet 4 of 6	CHECKED: * APPROVED: *

Z:\Altium\FiberSMtoTTLReceiver\Buff.SchDoc

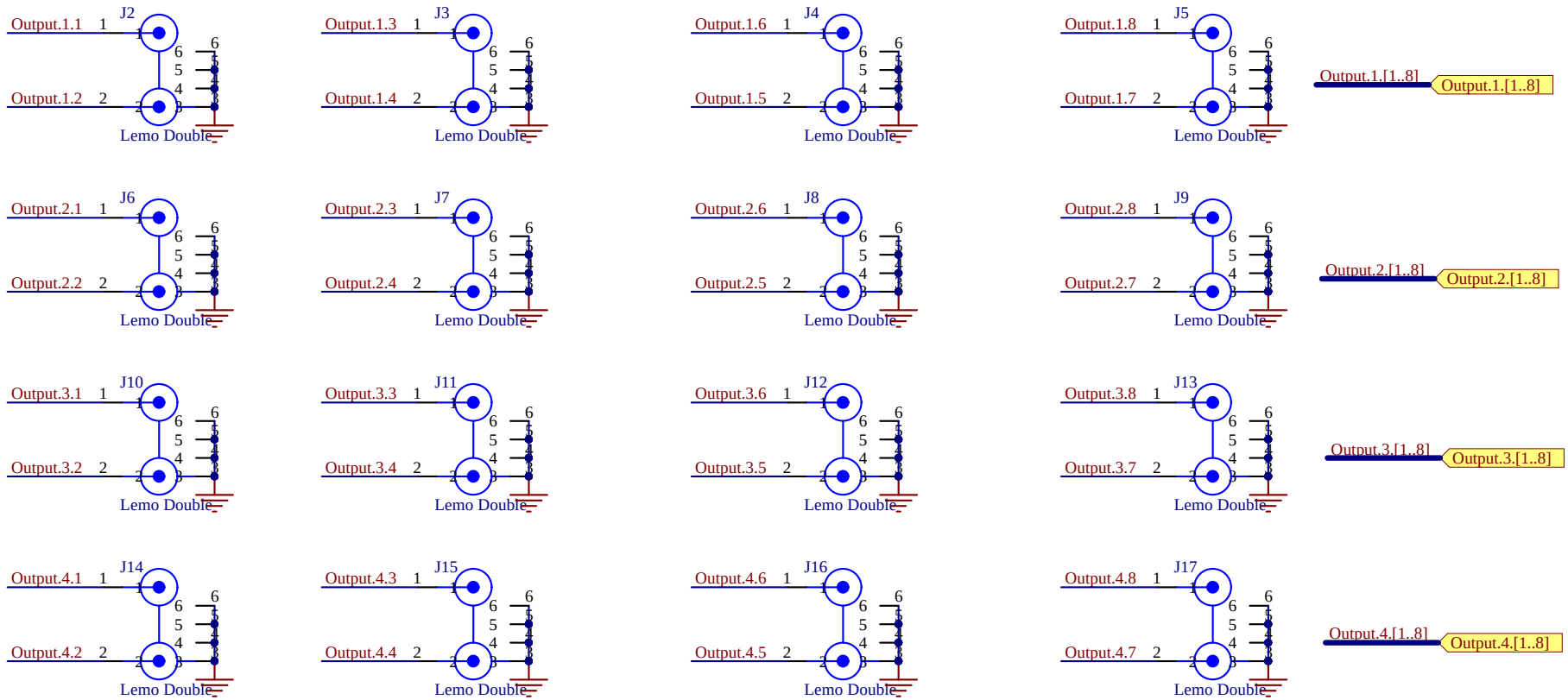

Fermilab

Operated by Fermi Research Alliance, LLC under Contract No. DE-AC02-07CH11359 with the United States Department of Energy.

Size	Rev		
A	B	Output	
Number *	Date: 8/18/2020 Time: 10:40:37 AM	Sheet 5 of 6	

ENGINEER: Mark Austin
DRAWN: Mark Austin
CHECKED: *
APPROVED: *

Z:\Altium\FiberSMtoTTLReceiver\Output.SchDoc

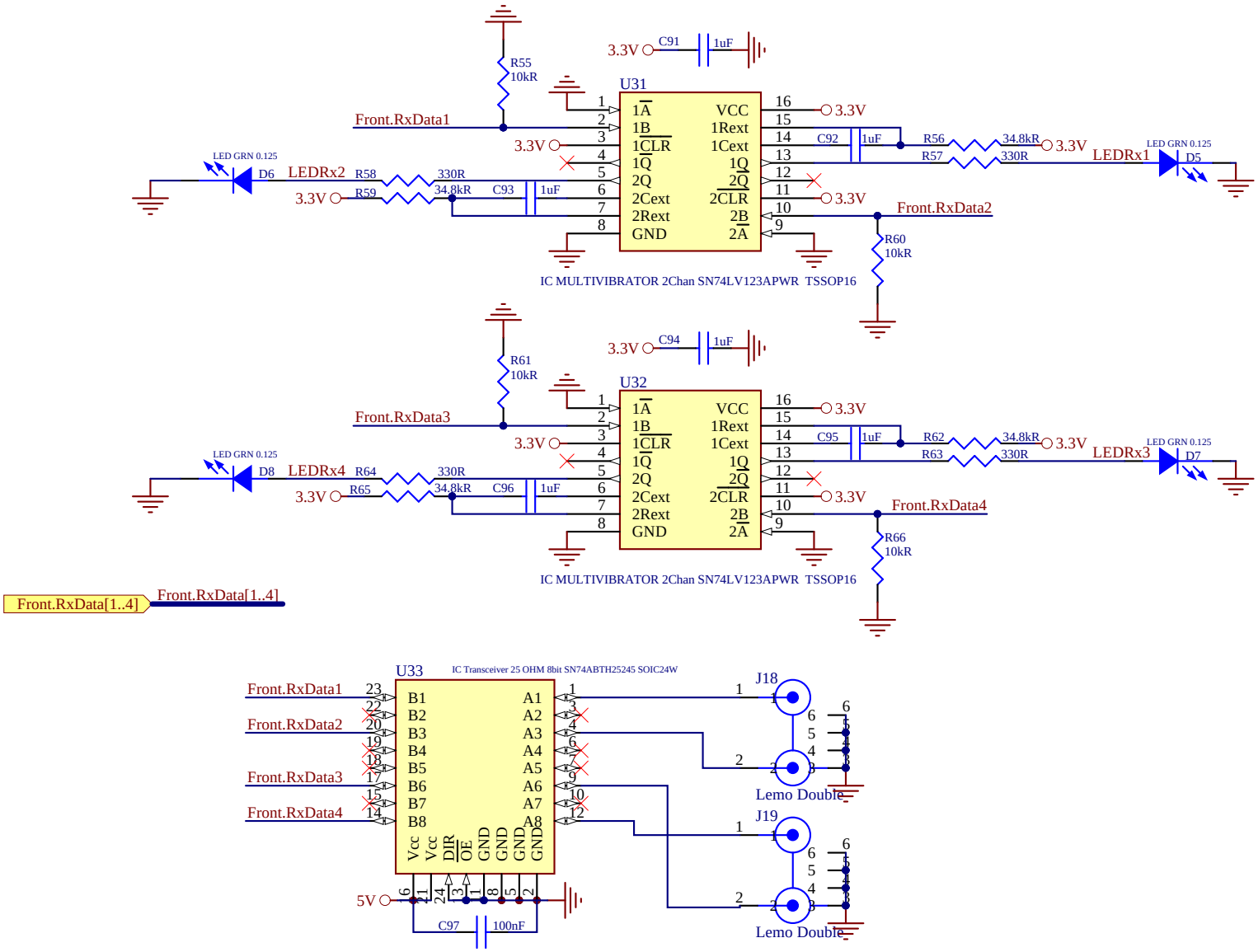

Operated by Fermi Research Alliance, LLC under Contract No. DE-AC02-07CH11359 with the United States Department of Energy.

Size	Rev	Front	ENGINEER: Mark Austin
A	B		DRAWN: Mark Austin
Number *	Date: 8/18/2020 Time: 10:40:37 AM	Sheet 6 of 6	CHECKED: * APPROVED: *

Z:\Altium\FiberSMtoTTLReceiver\Front.SchDoc

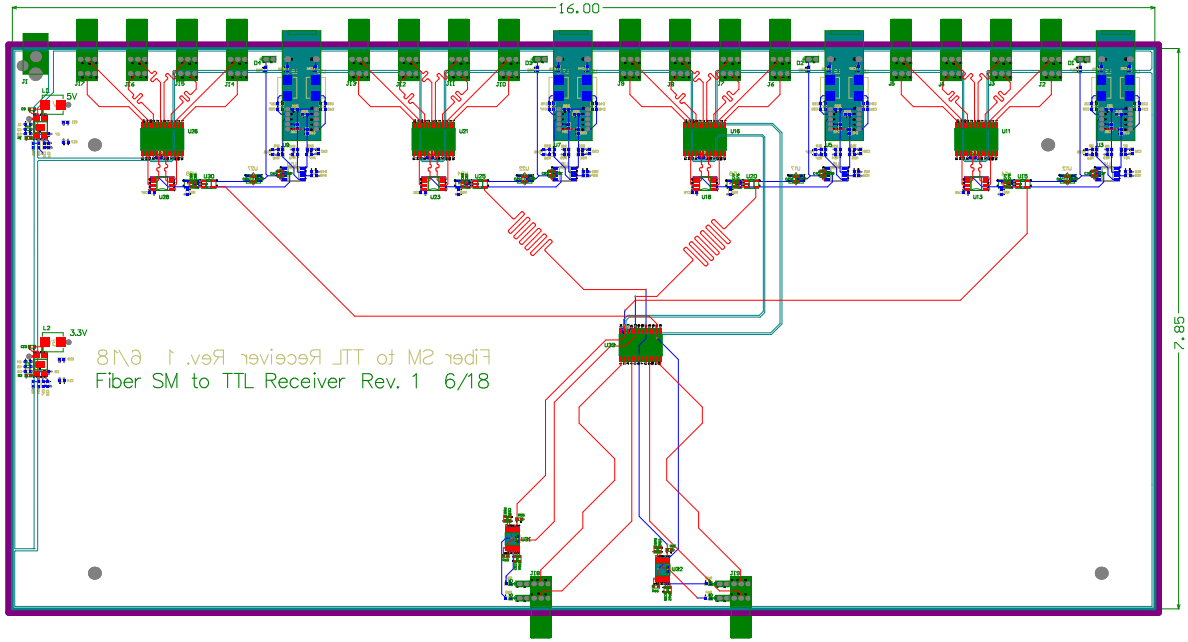
16.00
7.85
5V
3.3V
Fiber SM to TTL Receiver Rev. 1 6/18