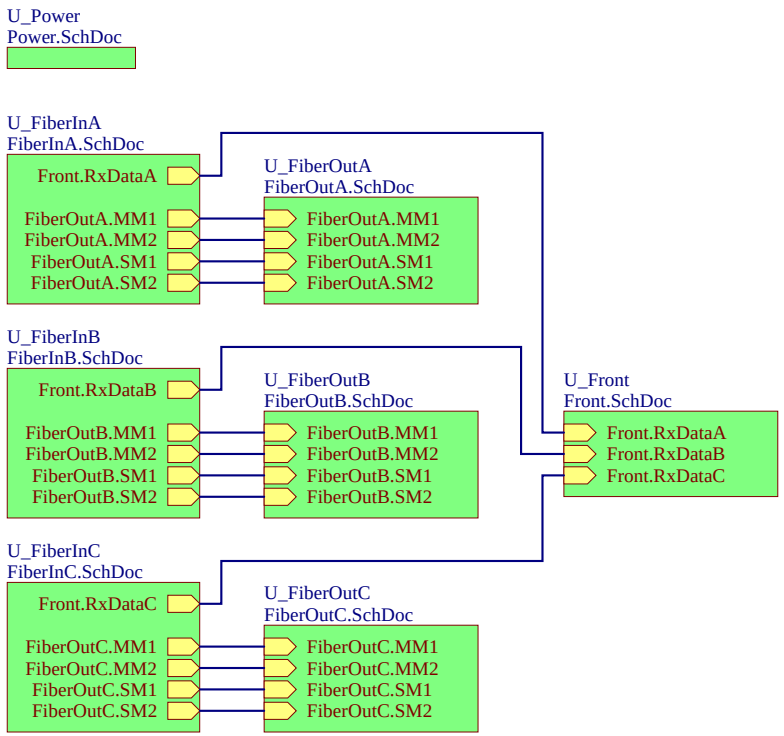

Fermilab

Operated by Fermi Research Alliance, LLC under Contract No. DE-AC02-07CH11359 with the United States Department of Energy.

Size	Rev			
A	*	FiberSMtoFiberMixed		ENGINEER: Mark Austin DRAWN: Mark Austin
Number		Date: 8/19/2020	Sheet	CHECKED: *
*		Time: 9:38:52 AM	1 of 9	APPROVED: *

Z:\Altium\FiberSMtoFiberMixed\FiberSMtoFiberMixed.SchDoc

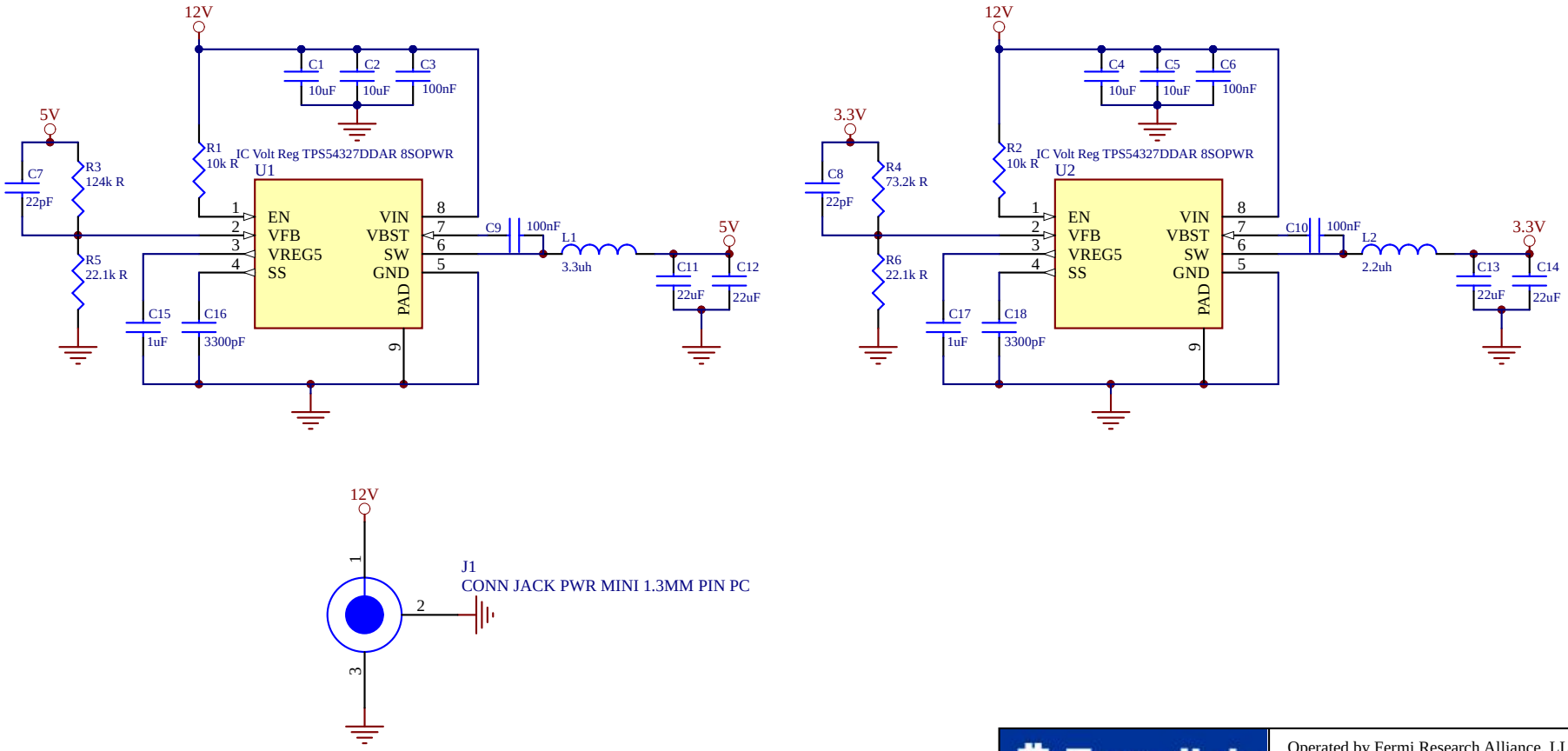

Fermilab

Operated by Fermi Research Alliance, LLC under Contract No. DE-AC02-07CH11359 with the United States Department of Energy.

Size	Rev	Power	ENGINEER: Mark Austin
A	*		DRAWN: Mark Austin
Number *	Date: 8/19/2020 Time: 9:38:52 AM	Sheet 2 of 9	CHECKED: * APPROVED: *

Z:\Altium\FiberSMtoFiberMixed\Power.SchDoc

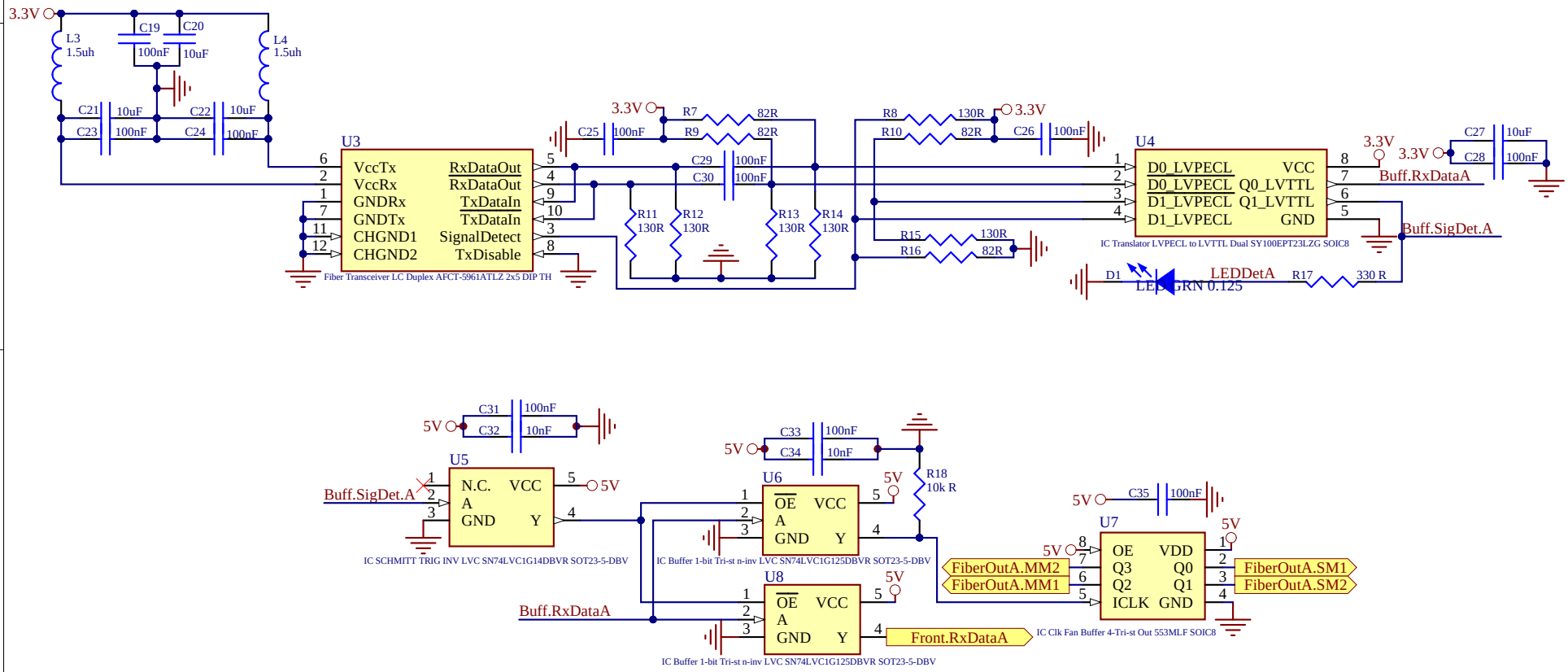

Fermilab

Operated by Fermi Research Alliance, LLC under Contract No. DE-AC02-07CH11359 with the United States Department of Energy.

Size	Rev		
A	*	FiberInA	
Number *	Date: 8/19/2020 Time: 9:38:52 AM	Sheet 3 of 9	

ENGINEER: Mark Austin
DRAWN: Mark Austin
CHECKED: *
APPROVED: *

Z:\Altium\FiberSMtoFiberMixed\FiberInA.SchDoc

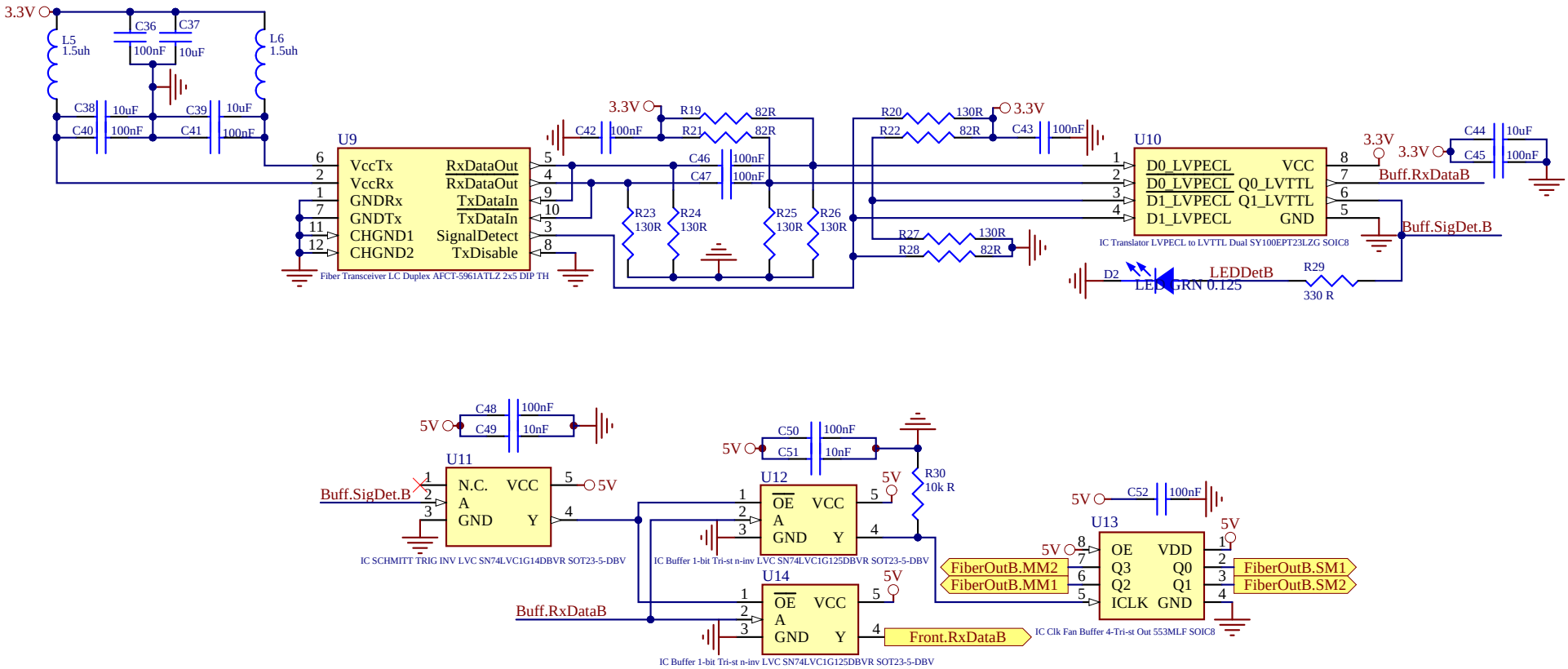

Fermilab

Operated by Fermi Research Alliance, LLC under Contract No. DE-AC02-07CH11359 with the United States Department of Energy.

Size	Rev			
A	*	FiberInB		ENGINEER: Mark Austin
Number	Date: 8/19/2020	Sheet		DRAWN: Mark Austin
*	Time: 9:38:52 AM	4 of 9		CHECKED: *
				APPROVED: *

Z:\Altium\FiberSMtoFiberMixed\FiberInB.SchDoc

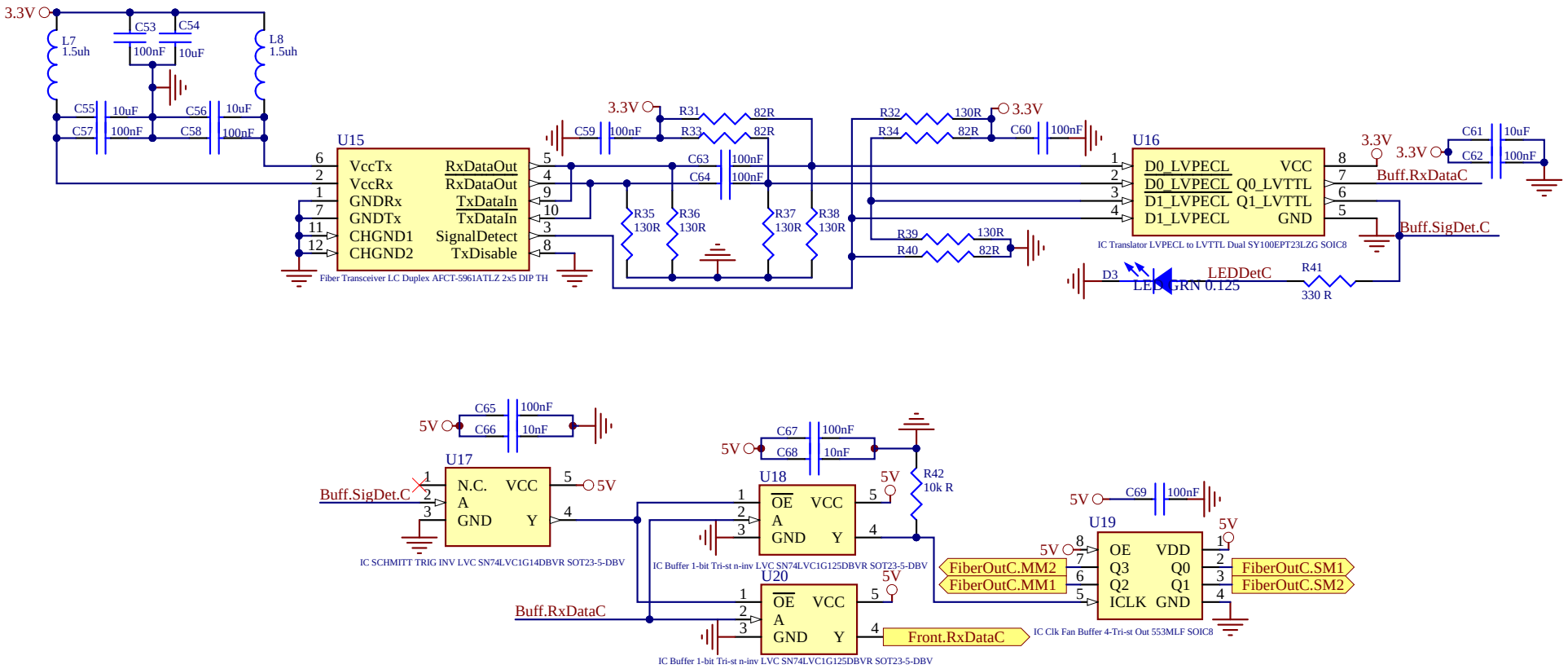

Fermilab

Operated by Fermi Research Alliance, LLC under Contract No. DE-AC02-07CH11359 with the United States Department of Energy.

Size	Rev		
A	*	FinberInC	
Number *	Date: 8/19/2020 Time: 9:38:52 AM	Sheet 5 of 9	

ENGINEER: Mark Austin
DRAWN: Mark Austin
CHECKED: *
APPROVED: *

Z:\Altium\FiberSMtoFiberMixed\FiberInC.SchDoc

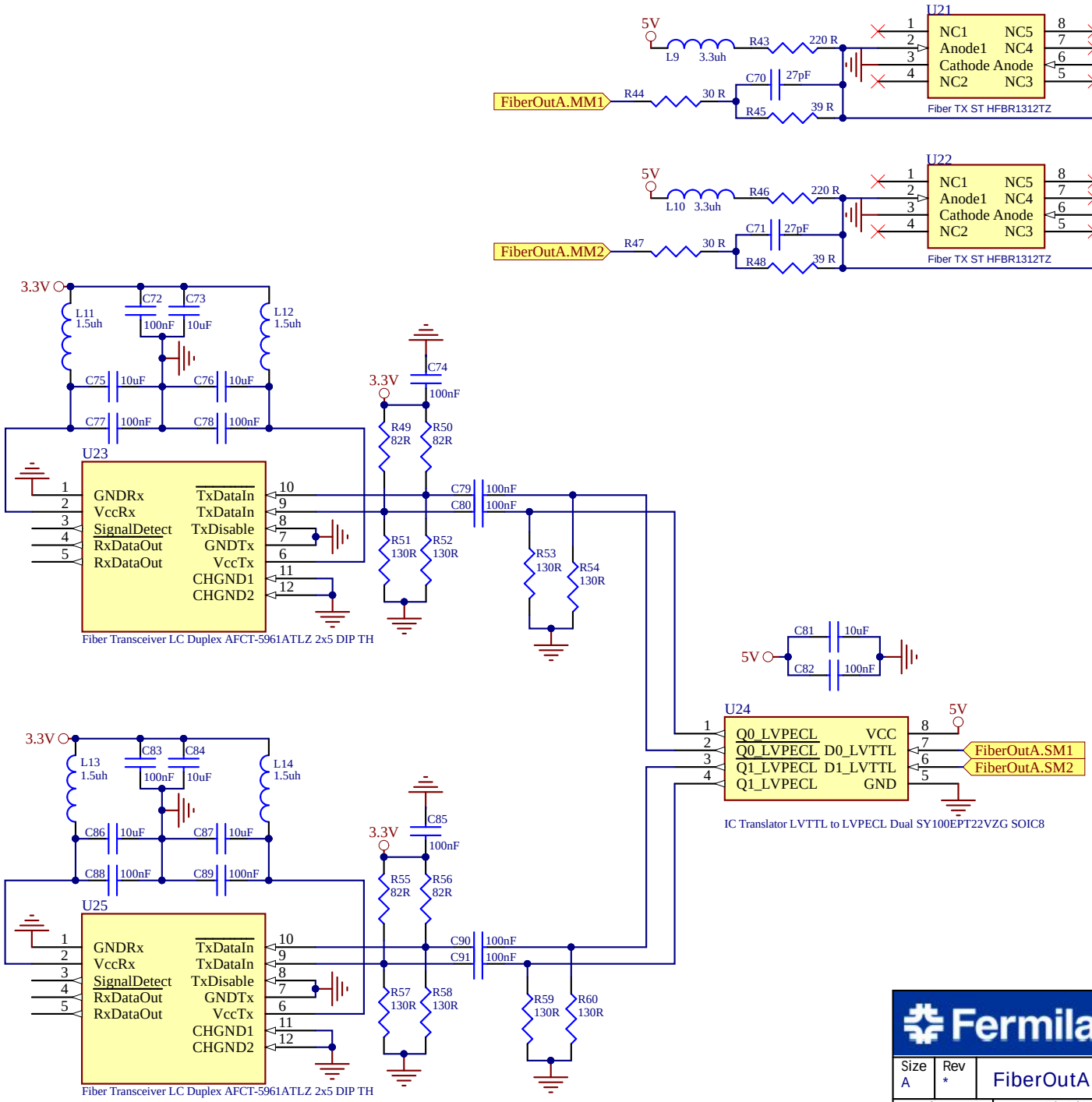

Fermilab

Operated by Fermi Research Alliance, LLC under Contract No. DE-AC02-07CH11359 with the United States Department of Energy.

Size	Rev	FiberOutA	ENGINEER: Mark Austin
A	*		DRAWN: Mark Austin
Number *	Date: 8/19/2020 Time: 9:38:53 AM	Sheet 6 of 9	CHECKED: * APPROVED: *

Z:\Altium\FiberSMtoFiberMixed\FiberOutA.SchDoc

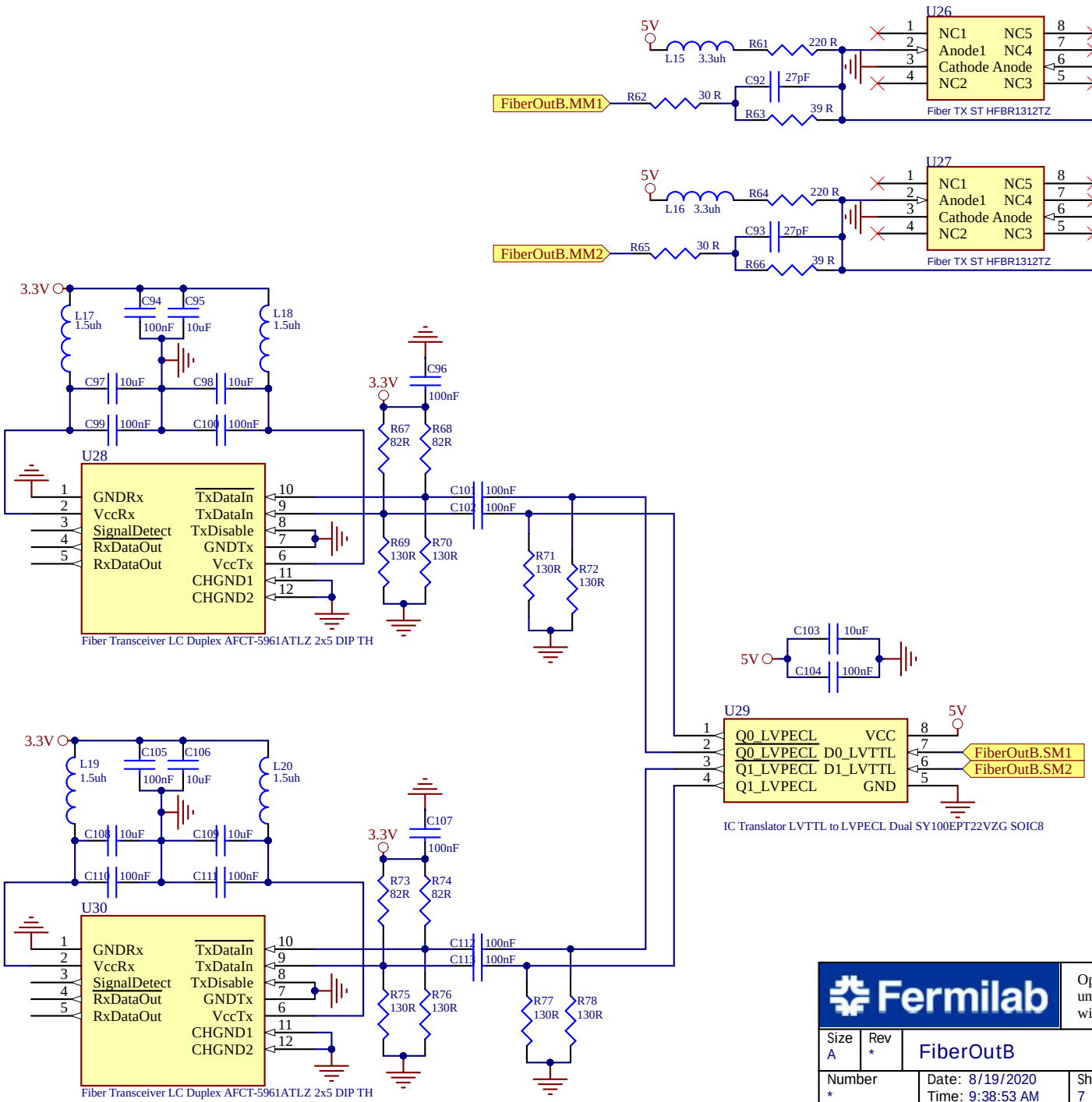

Fermilab

Operated by Fermi Research Alliance, LLC under Contract No. DE-AC02-07CH11359 with the United States Department of Energy.

Size	Rev	FiberOutB	ENGINEER: Mark Austin
A	*		DRAWN: Mark Austin
Number *	Date: 8/19/2020 Time: 9:38:53 AM	Sheet 7 of 9	CHECKED: * APPROVED: *

Z:\Altium\FiberSMtoFiberMixed\FiberOutB.SchDoc

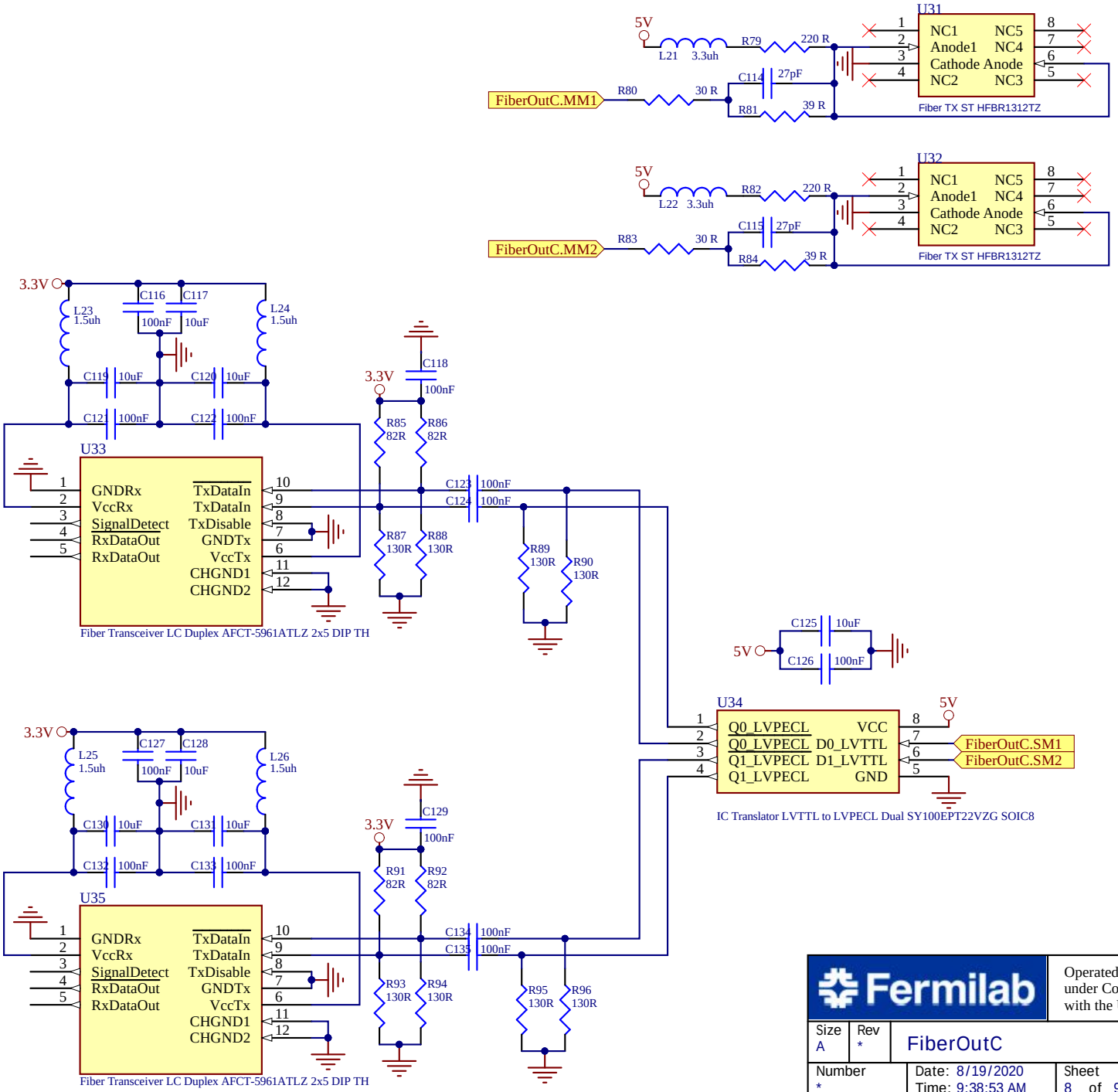

Fermilab

Operated by Fermi Research Alliance, LLC under Contract No. DE-AC02-07CH11359 with the United States Department of Energy.

Size	Rev	FiberOutC	ENGINEER: Mark Austin
A	*		DRAWN: Mark Austin
Number *	Date: 8/19/2020 Time: 9:38:53 AM	Sheet 8 of 9	CHECKED: * APPROVED: *

Z:\Altium\FiberSMtoFiberMixed\FiberOutC.SchDoc

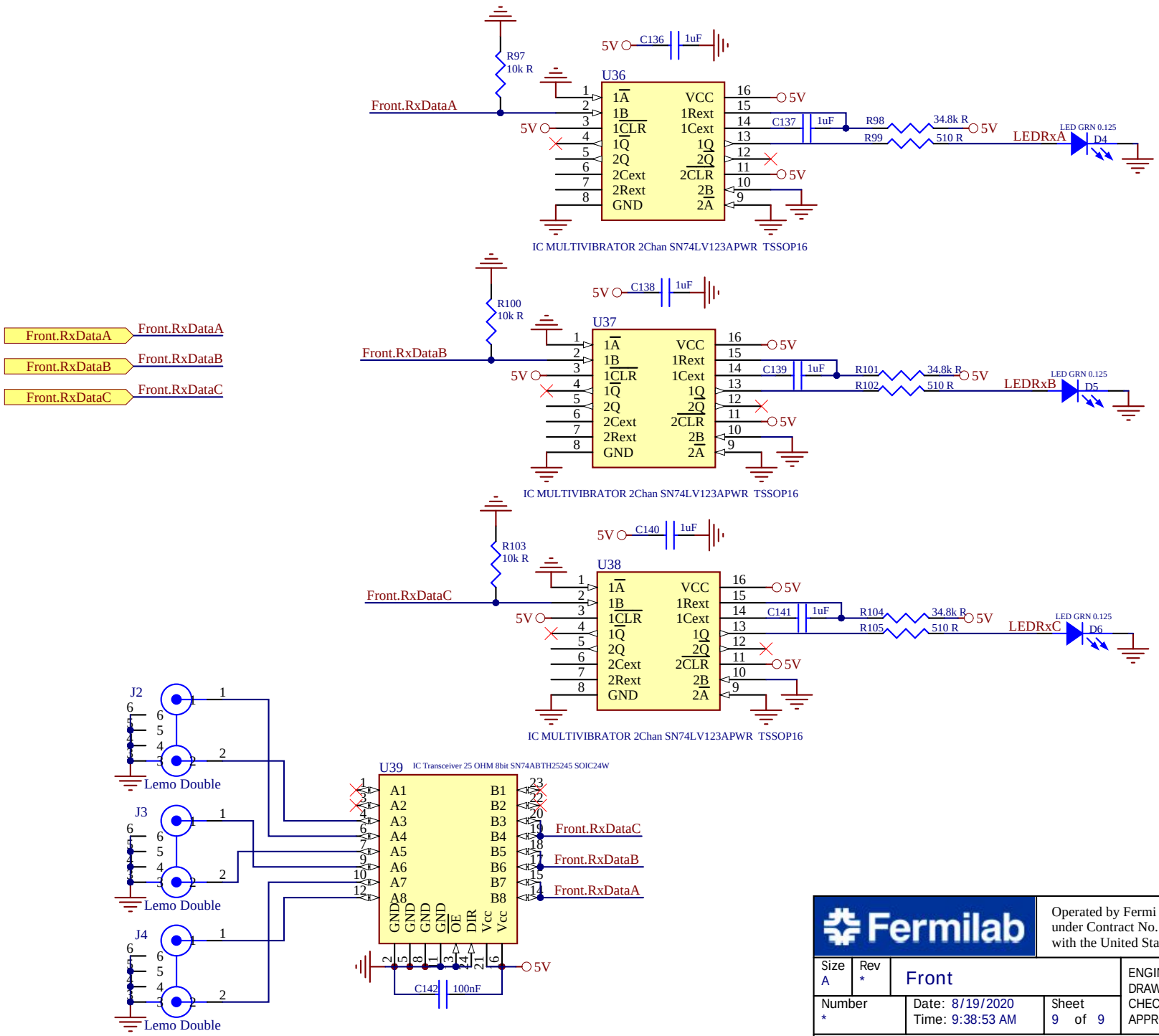

Fermilab

Operated by Fermi Research Alliance, LLC under Contract No. DE-AC02-07CH11359 with the United States Department of Energy.

Size	Rev	Front	ENGINEER: Mark Austin
A	*		DRAWN: Mark Austin
Number *	Date: 8/19/2020 Time: 9:38:53 AM	Sheet 9 of 9	CHECKED: * APPROVED: *

Z:\Altium\FiberSMtoFiberMixed\Front.SchDoc

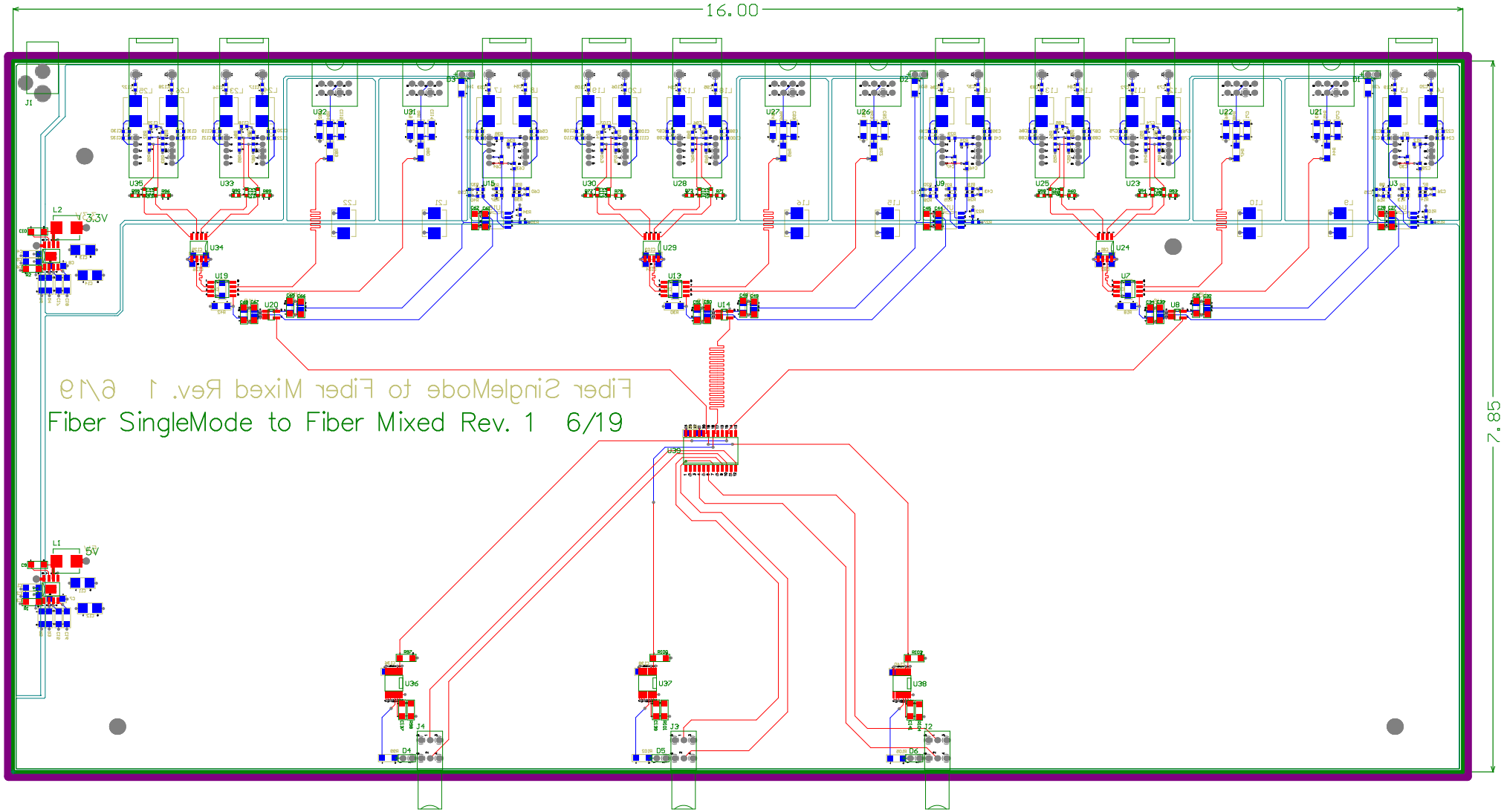
16.00
7.85
Fiber SingleMode to Fiber Mixed Rev. 1 6/19
J1
L2
3.3V
L1
5V
U33
U36
U37
U38
J4
J3
J2
D4
D5
D6