Optical Ring Resonators as Tracking Readout or Trigger

Steve Kuhlmann, Hal Spinka, Dave Underwood, +students (ANL/HEP),

Guohua Wei, Nathaniel Stern (Northwestern University) ,

Fabrication expertise: Leo Ocola, Dave Czaplewski, Ralu Divan, Suzanne Miller (ANL/CNM)

Overview of Silicon Photonics/Ring Resonators

Overview of Applications and Motivations

Specifics for Tracking Applications

This is a Blue-Sky Idea, not associated with LHC upgrades

(Also relatively new, first working devices in last 6 months…)

Optical/Infrared Silicon Waveguides (<1um wide/tall)

Difference in index of refraction of silicon with surrounding material

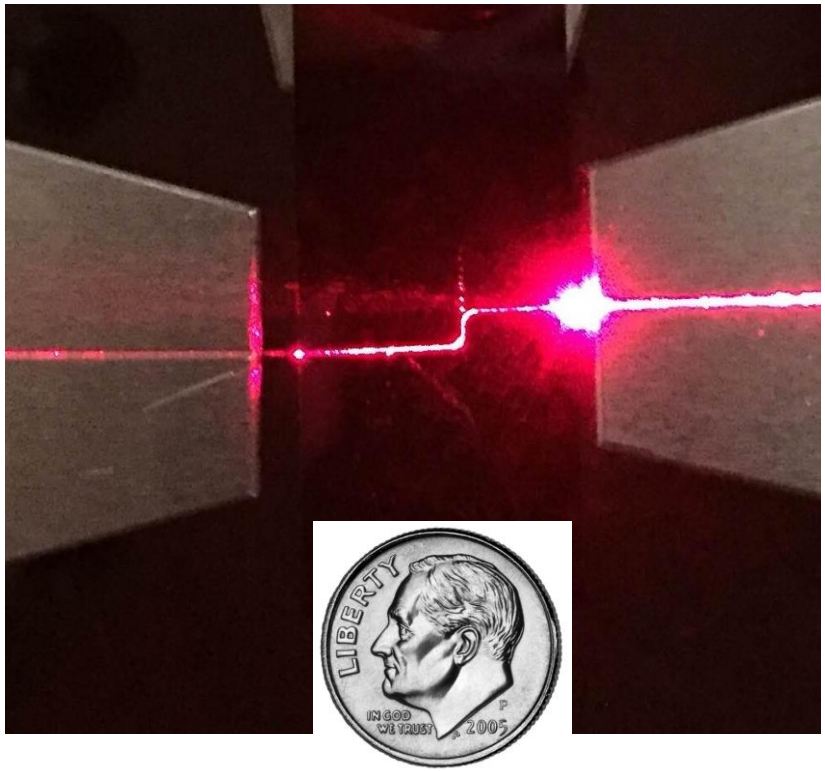

Design file

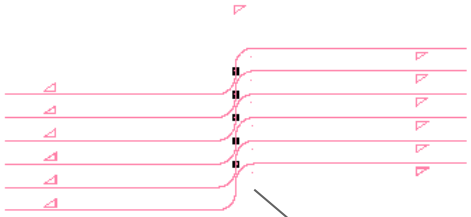

10um Ring in middle

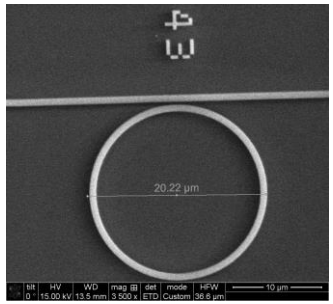

Nanofabrication Steps With UV Lithography (<100nm process) or more precise Electron Beam Lithography

Start with 3-layer wafer: a) Si substrate, b) SiO2, c) Silicon device layer

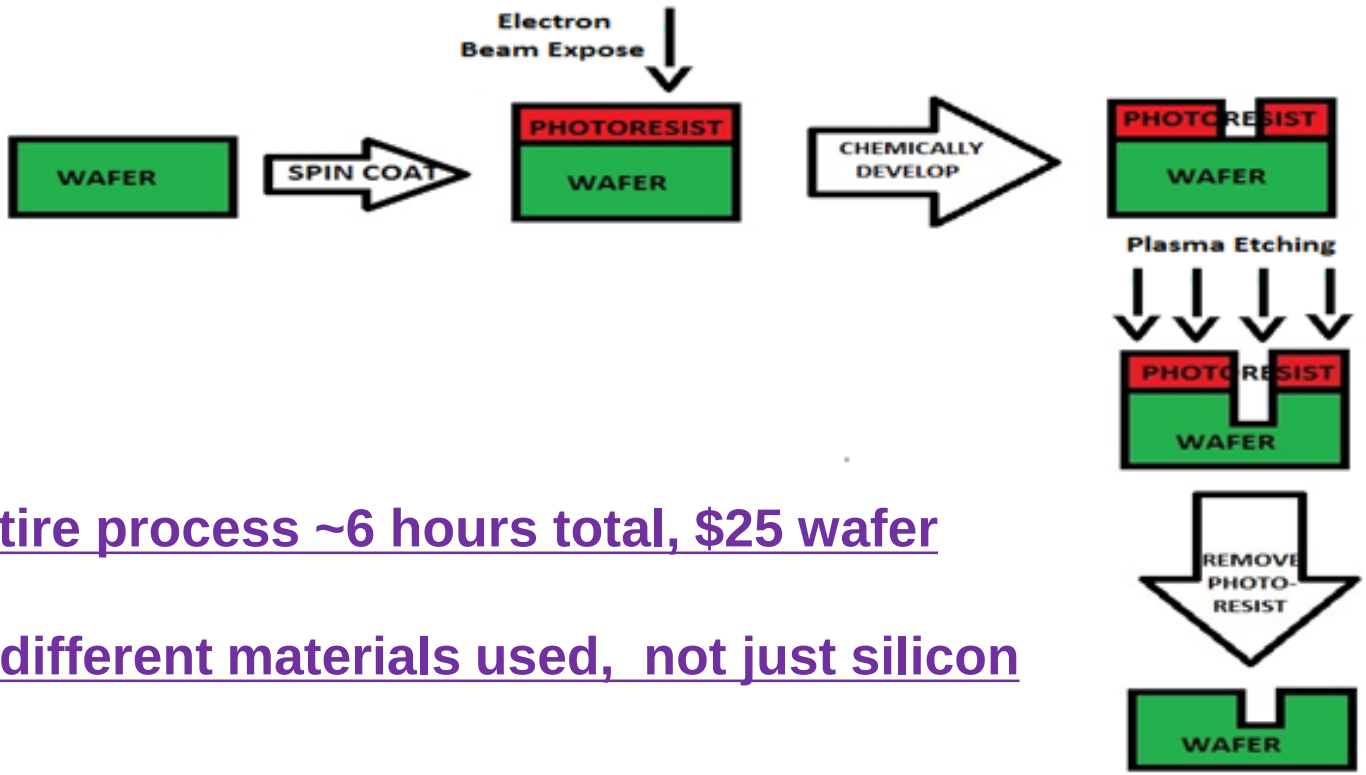

Entire process ~6 hours total, $25 wafer

Many different materials used, not just silicon

Silicon photonics emerging technology

First major US silicon photonics foundry opens this year in Rochester

$610M facility, $500M industry, $110M DOE and DOD

AIM photonics
AMERICAN INSTITUTE for MANUFACTURING INTEGRATED PHOTONICS

US VICE PRESIDENT JOE BIDEN (CENTER) MEETS SUNY POLYTECHNIC INSTITUTE'S FOUNDING PRESIDENT AND CEO DR. ALAIN KALOYEROS (FAR LEFT) AND NEW YORK STATE GOVERNOR ANDREW CUOMO (RIGHT OF CENTER) DURING THE OFFICIAL ANNOUNCEMENT OF THE AIM PHOTONICS HUB IN ROCHESTER, NY, ON JULY 27, 2015.

Optical Ring Resonators: Resonant cavities on a chip

St. Paul's Cathedral, London

The Whispering Gallery

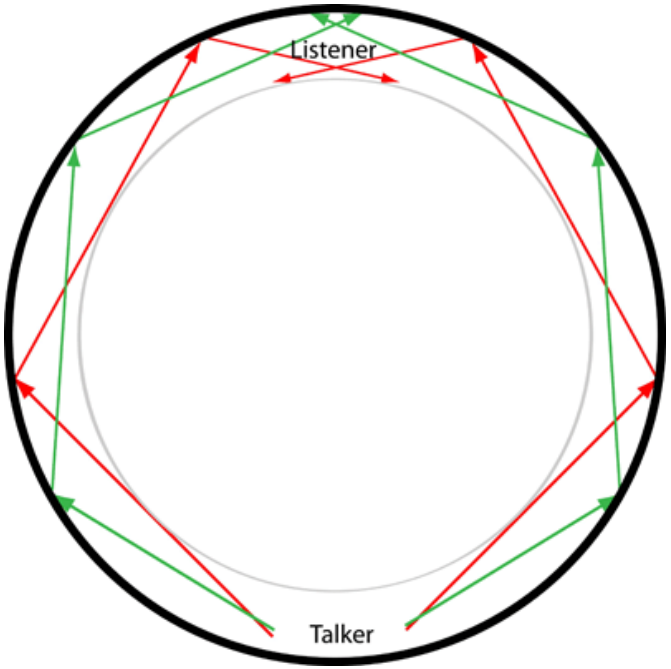

How do Ring Resonators Work?

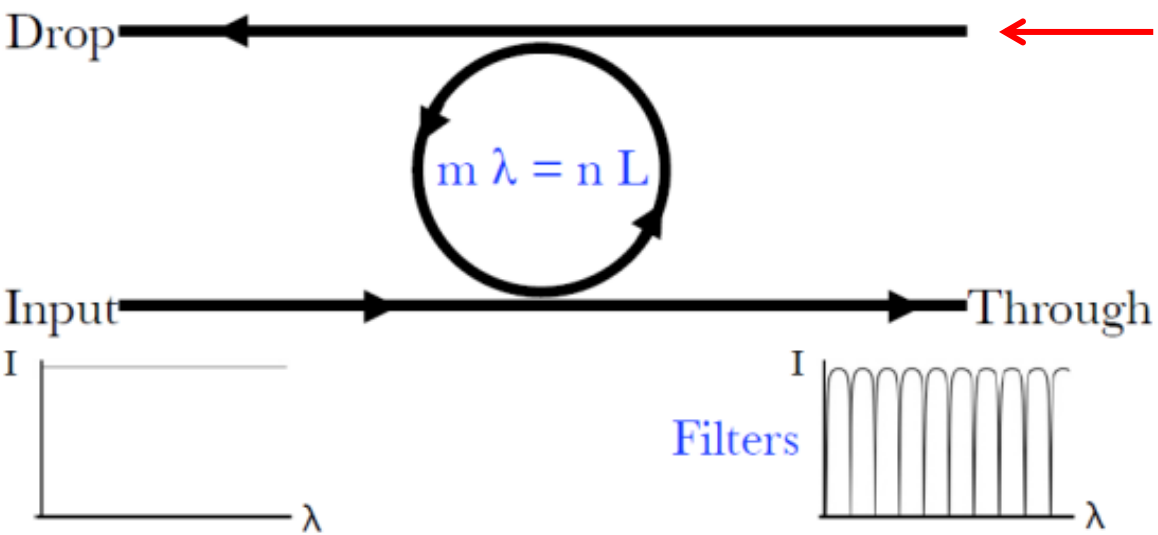

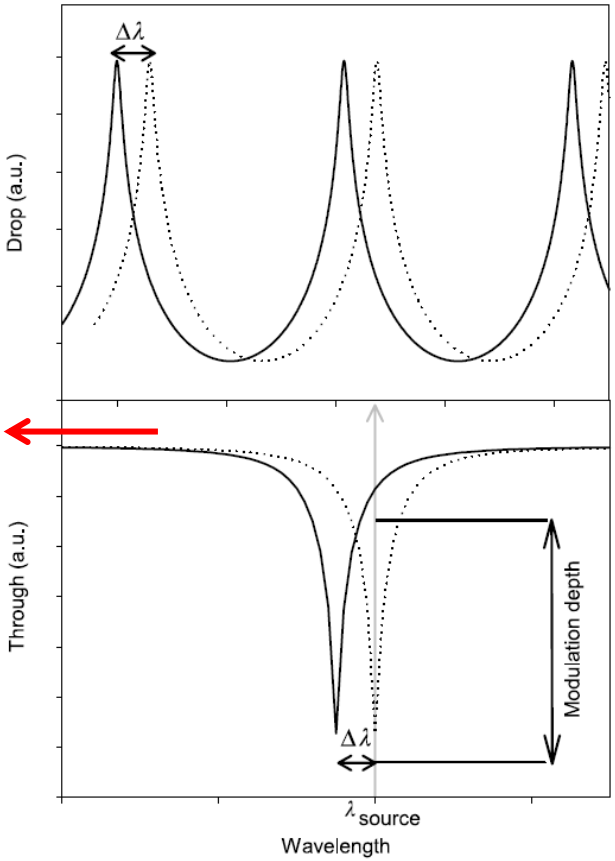

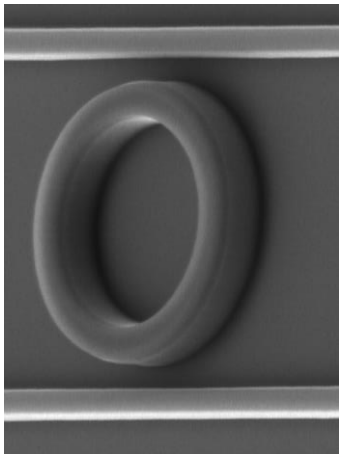

Silicon ring and waveguides fabricated at Argonne

SEM pic: 3um scale

Applications and Motivations

Notch filters for Dark Energy Science/Infrared Astrophysics (our main motivation)

Highly Sensitive Biosensors

Telecommunications

Next Generation Super-Computer Inter-Node Communications

High Energy Physics "Smart" Tracking Detectors (this talk)

These applications share a lot of common techniques

Cascaded ring resonators as multi-notch filters

Revolutionize Infrared Astrophysics by removing sky background spikes

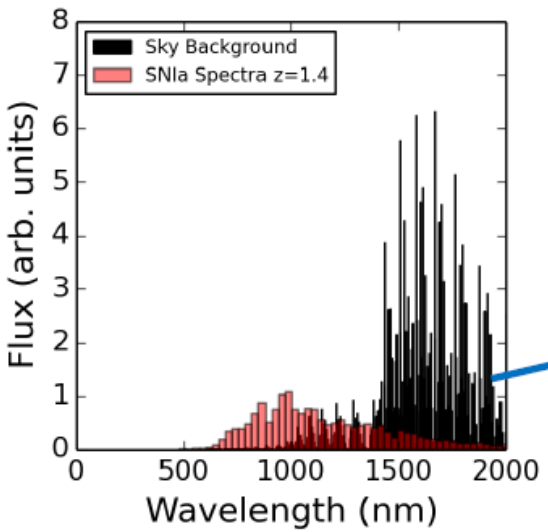

ZOOM 1600nm

Even suppressing 6 spikes, with good efficiency for other wavelengths, is a great improvement for infrared science

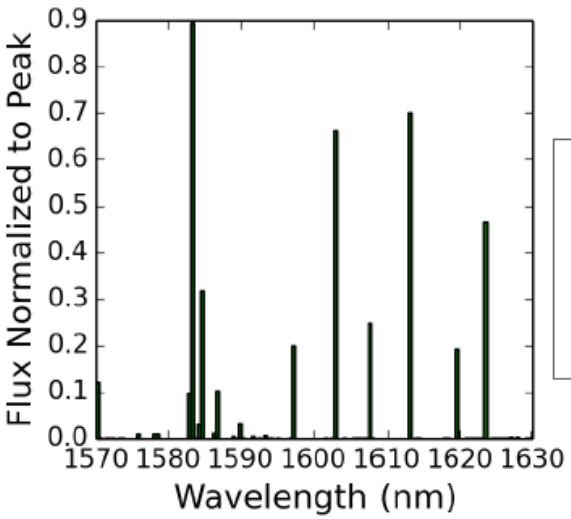

Background spikes are <0.2nm wide separated by 5-10nm.

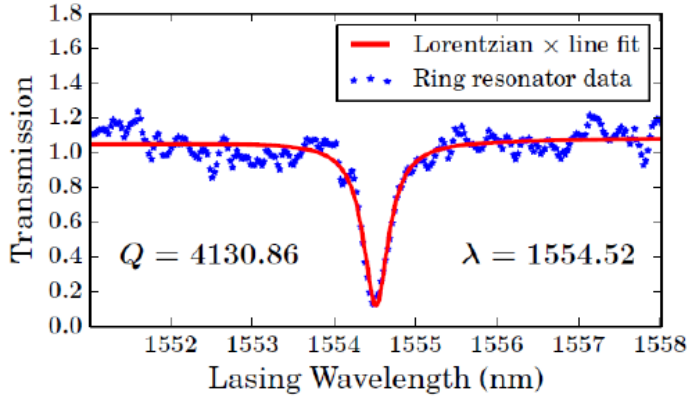

Need a series of rings with suppression like this tuned to the sky wavelengths

Other generic applications of ring resonator technology

Anal Bioanal Chem (2011) 399:205–211
DOI 10.1007/s00216-010-4237-z

TRENDS

Optical ring resonators for biochemical and chemical

Yuze Sun · Xudong Fan

Have been used to improve sensitivity for detection of DNA, proteins, viruses, bacteria, ethanol, pesticides…

Techniques used here are one of the backup plans for wavelength tuning for astrophysics. (more later)

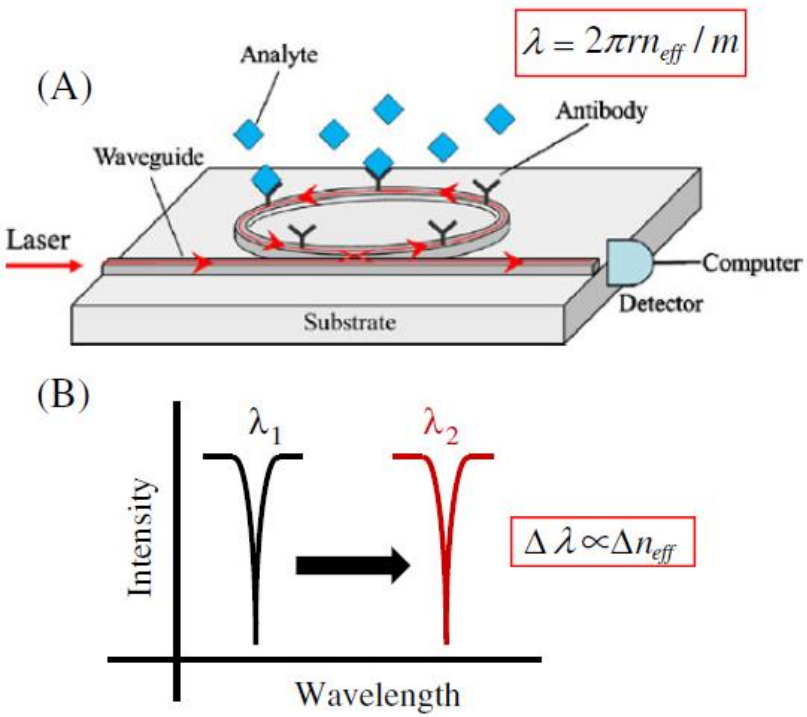

Silicon photonics/ring resonators coming of age

IBM press release Dec 2012: "After More Than a Decade of Research, Silicon Nanophotonics is Ready for Development of Commercial Applications"

Next generation supercomputers and telecommunications will use tuned ring resonators as core technology

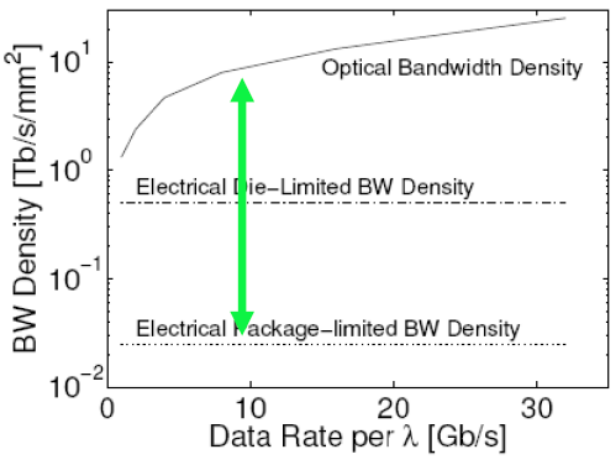

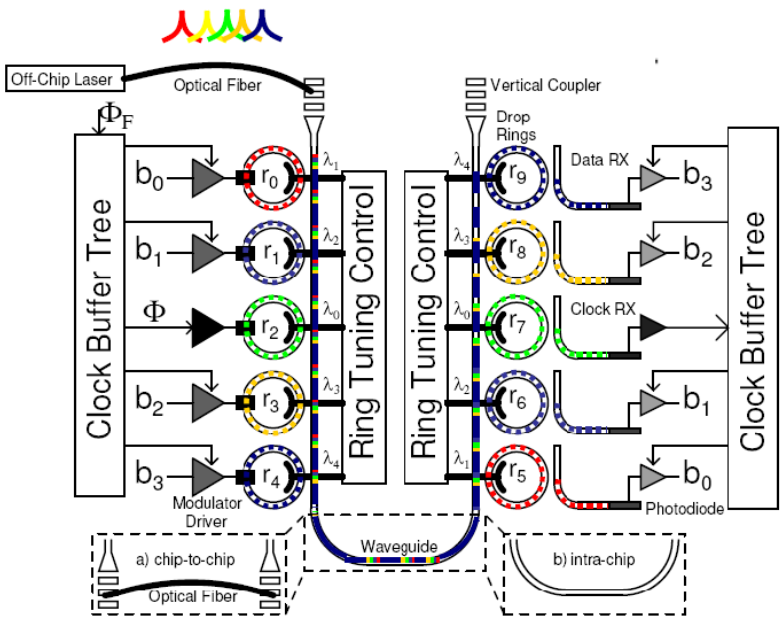

- Each λ carries one bit of data
  - ➔Bandwidth Density achieved through DWDM
  - ➔Energy-efficiency achieved through low-loss optical components and tight integration

11

Stojanovic (MIT)

Example of Ring Resonator Wavelength Modulation

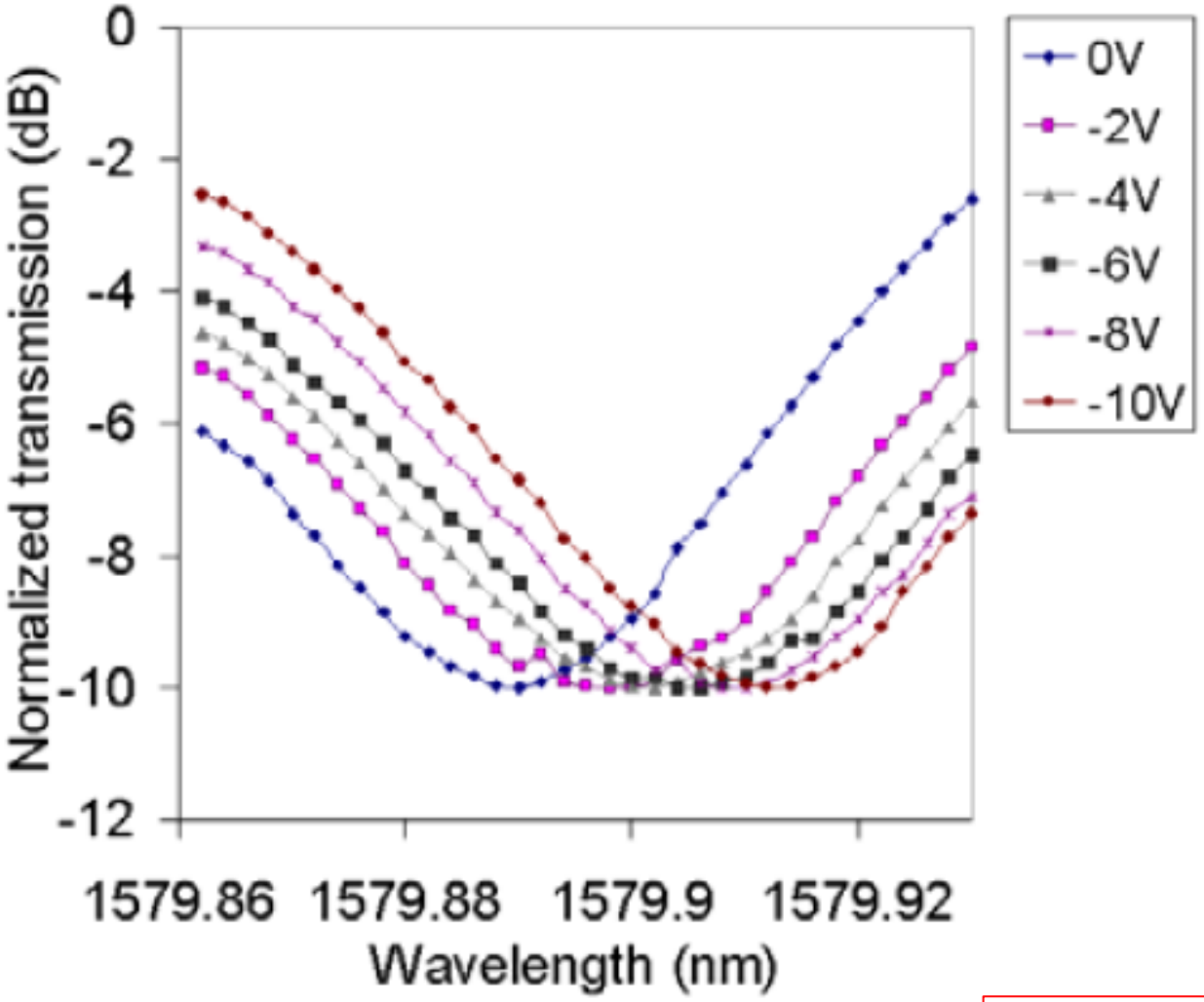

Gardes et al., 2009

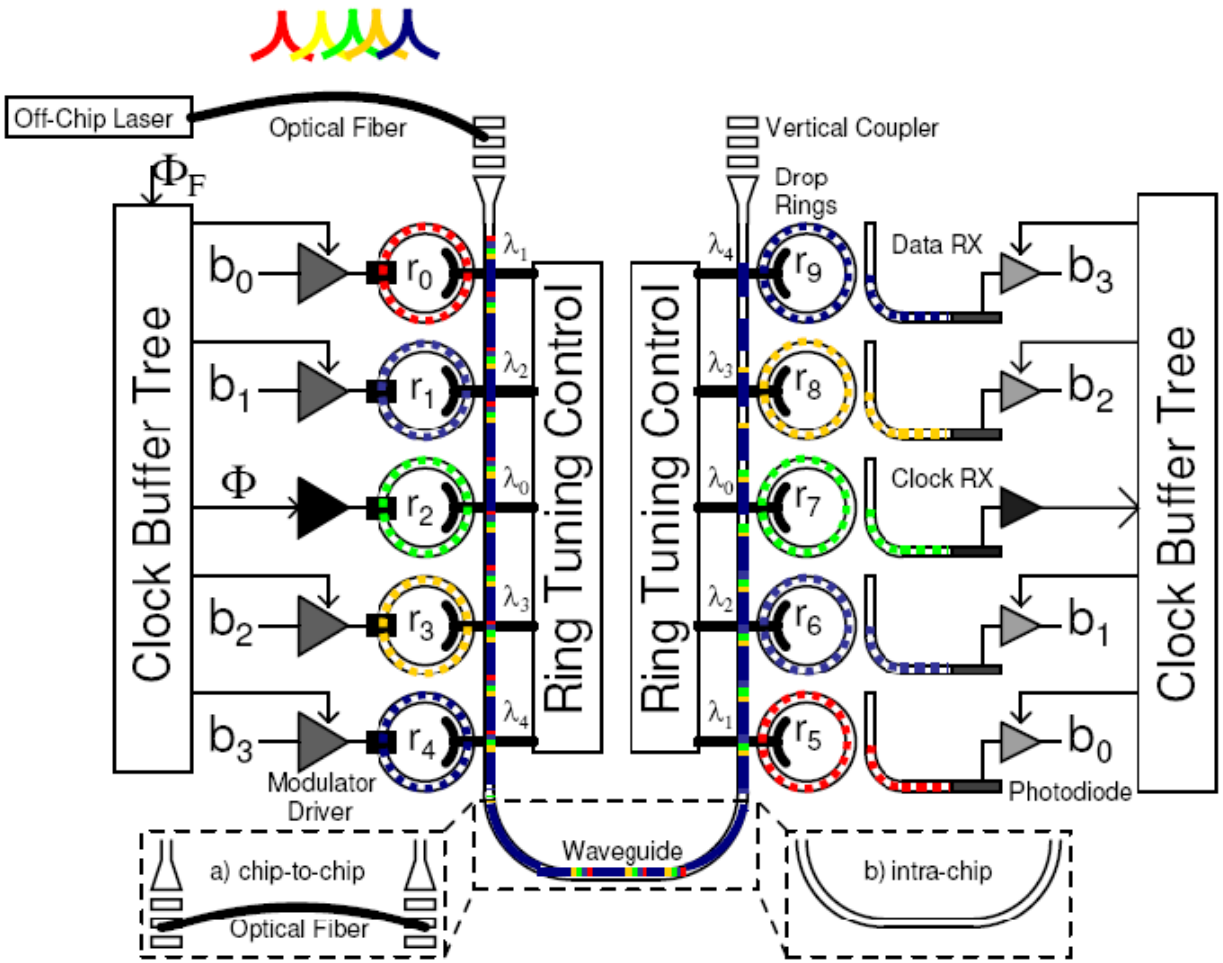

- Each λ carries one bit of data

➔Bandwidth Density achieved through DWDM

➔Energy-efficiency achieved through low-loss optical components and tight integration

Stojanovic (MIT)

The second half of the device could be on a second chip OFF-DETECTOR
(Example: Xu et al., 2006)

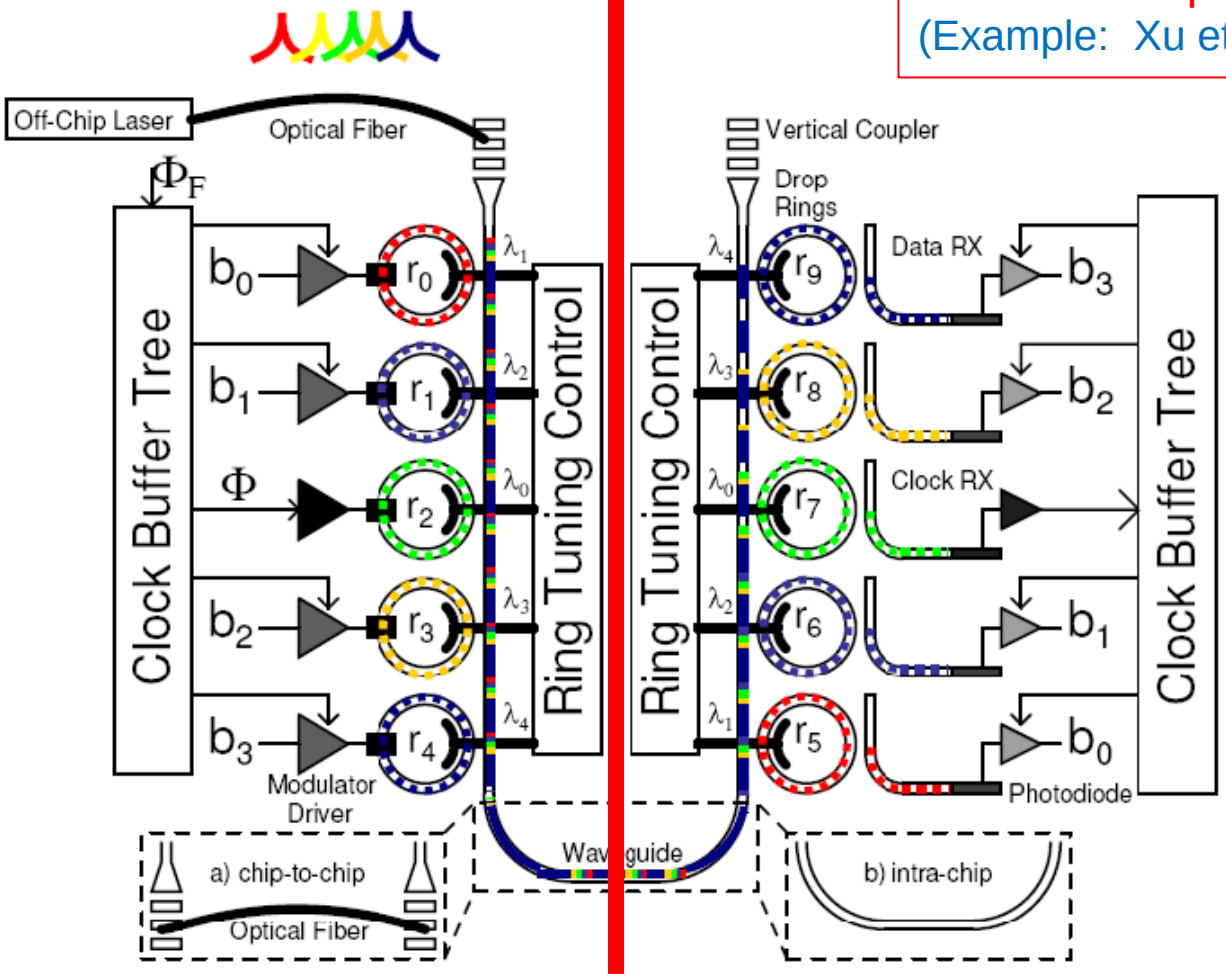

- Each λ carries one bit of data
  - ➔Bandwidth Density achieved through DWDM
  - ➔Energy-efficiency achieved through low-loss optical components and tight integration

Stojanovic (MIT)

- **Low Mass: Integrated with pre-amp, possibly nothing else on detector**
- **Low power ~1uW/channel**
- **Compact: ~5um/channel (ring diameter + light wavelength)**
- **Fast: >165 GHz (Bortnik et al., 2007)**

Summary

Silicon Photonics an Emerging Technology, new to US HEP

Possible Blue-Sky Applications in Astrophysics and HEP TDAQ

Possible benefits for HEP TDAQ:

Mass Reduction
Low Power
Compact
Fast

Additional Slides…

One channel of Tracker Readout/Trigger