global **F**eature **EX**traction (gFEX)

Giordon Stark, David Miller (advisor)

LUA Talk 2014

November 14th, 2014

The Motivation

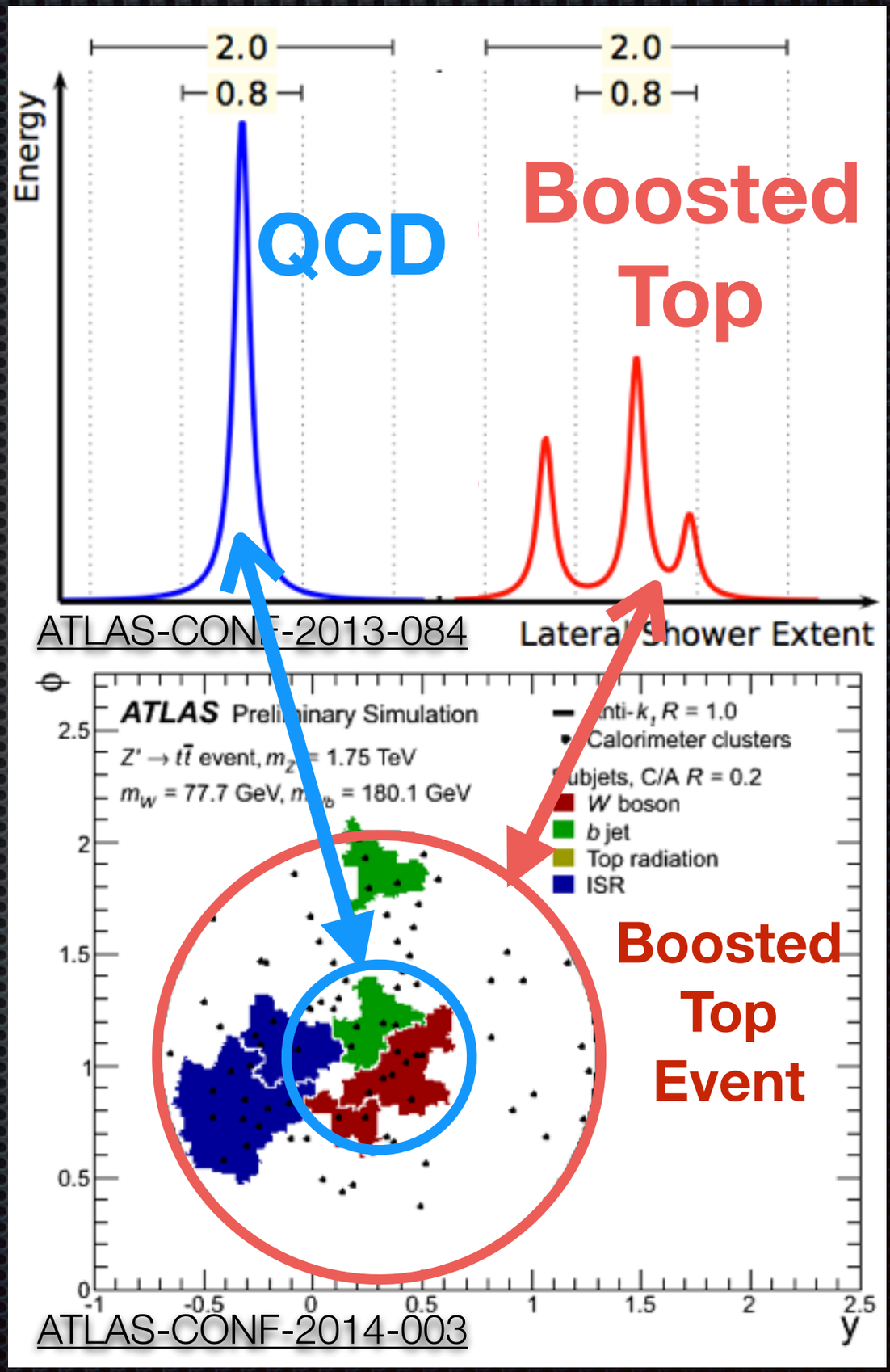

The Motivation

- Boosted objects with substructure are the crux of future ATLAS studies
  - Expect many boosted W/Z/h bosons & tops in LHC Run 2 and beyond

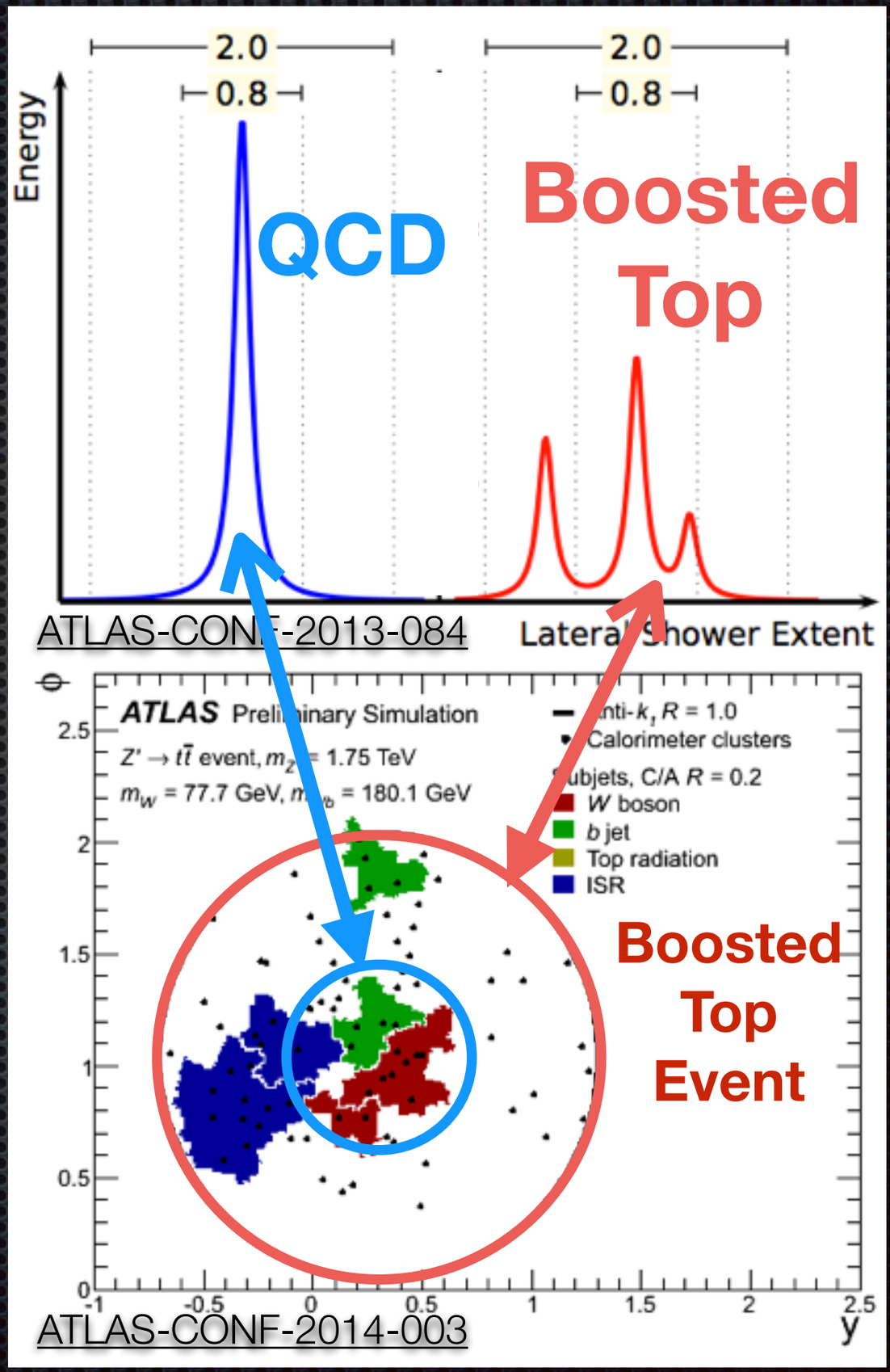

The Motivation

- Boosted objects with substructure are the crux of future ATLAS studies
  - Expect many boosted W/Z/h bosons & tops in LHC Run 2 and beyond
- Current level 1 triggers are
  - **efficient for narrow jets**
  - **inefficient for large-R jets**

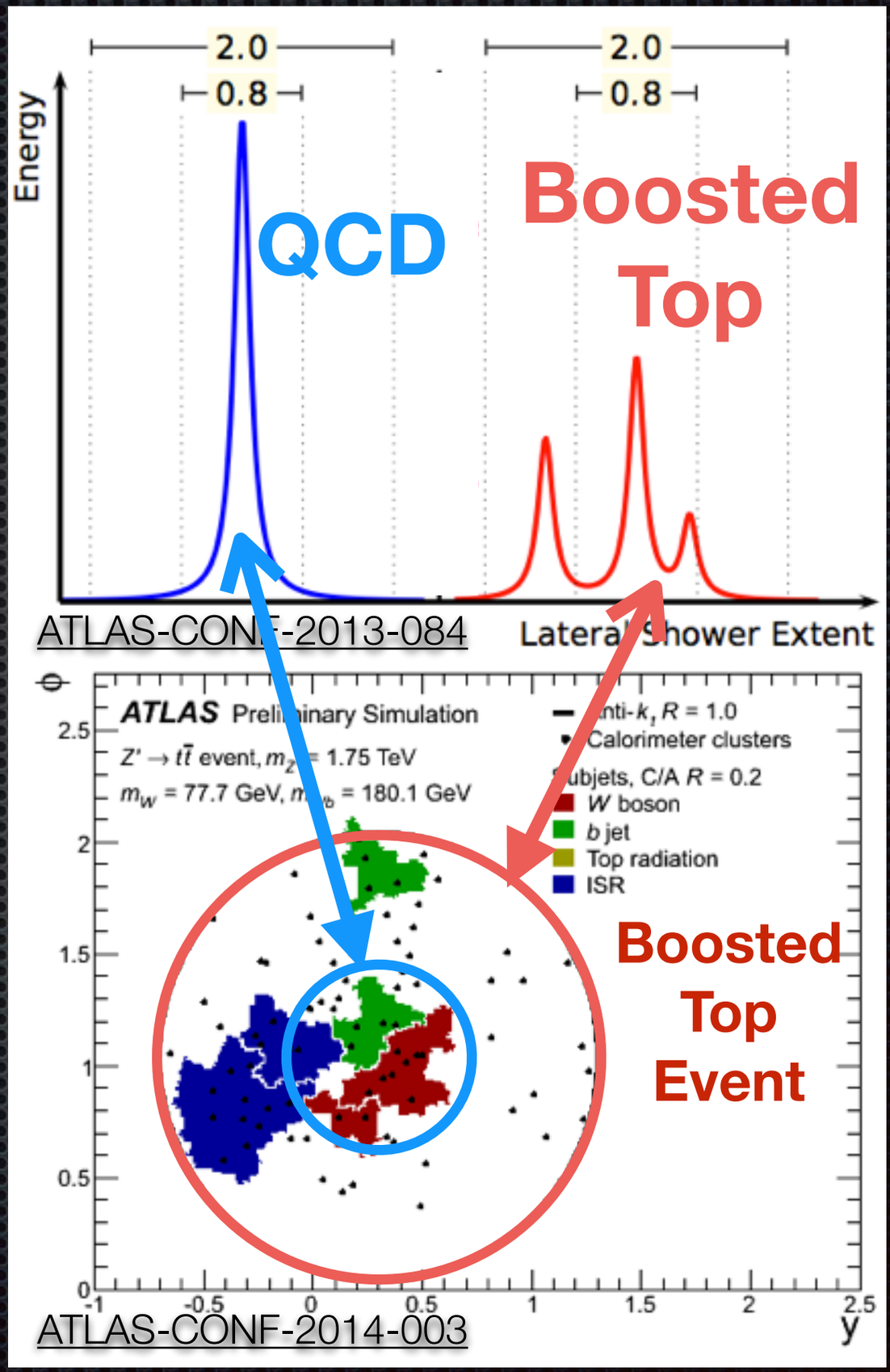

The Motivation

- Boosted objects with substructure are the crux of future ATLAS studies
  - Expect many boosted W/Z/h bosons & tops in LHC Run 2 and beyond
- Current level 1 triggers are
  - **efficient for narrow jets**
  - **inefficient for large-R jets**
- Can we increase the trigger region?
  - **not possible with current L1Calo architecture!**

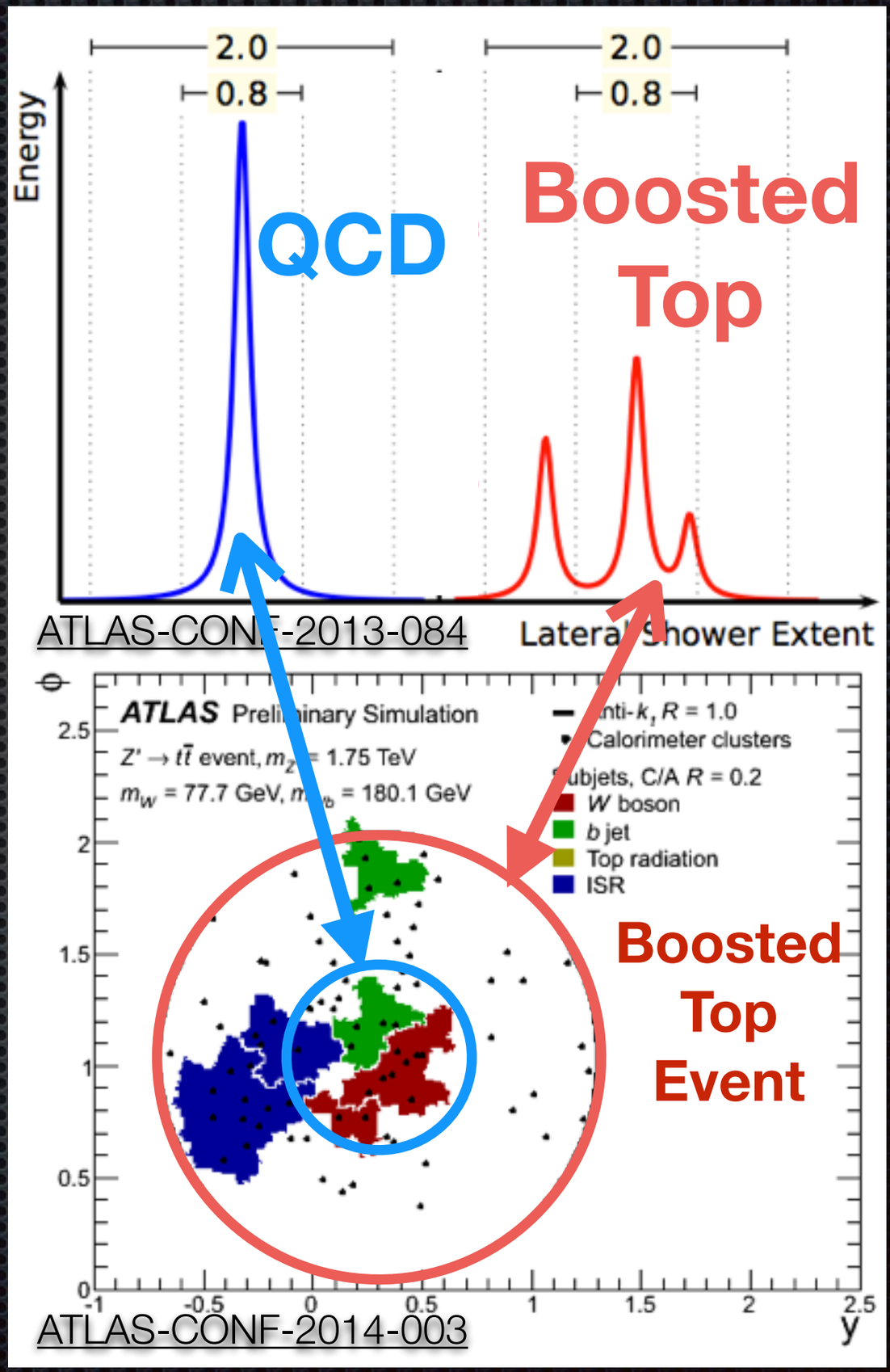

Triggering on Jet Substructure

Triggering on Jet Substructure

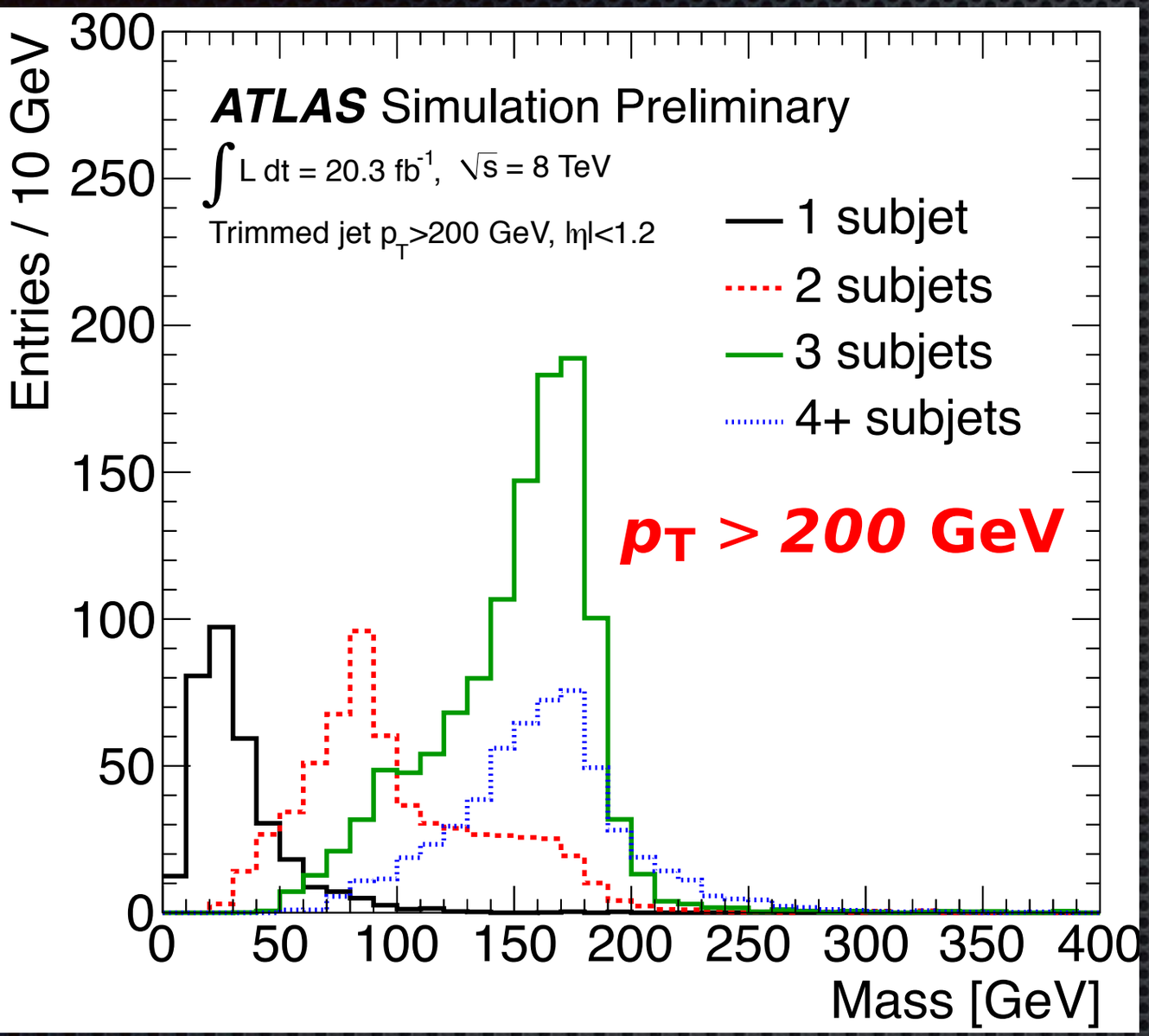

Triggering on Jet Substructure

Blue=Current Trigger @ 100 GeV

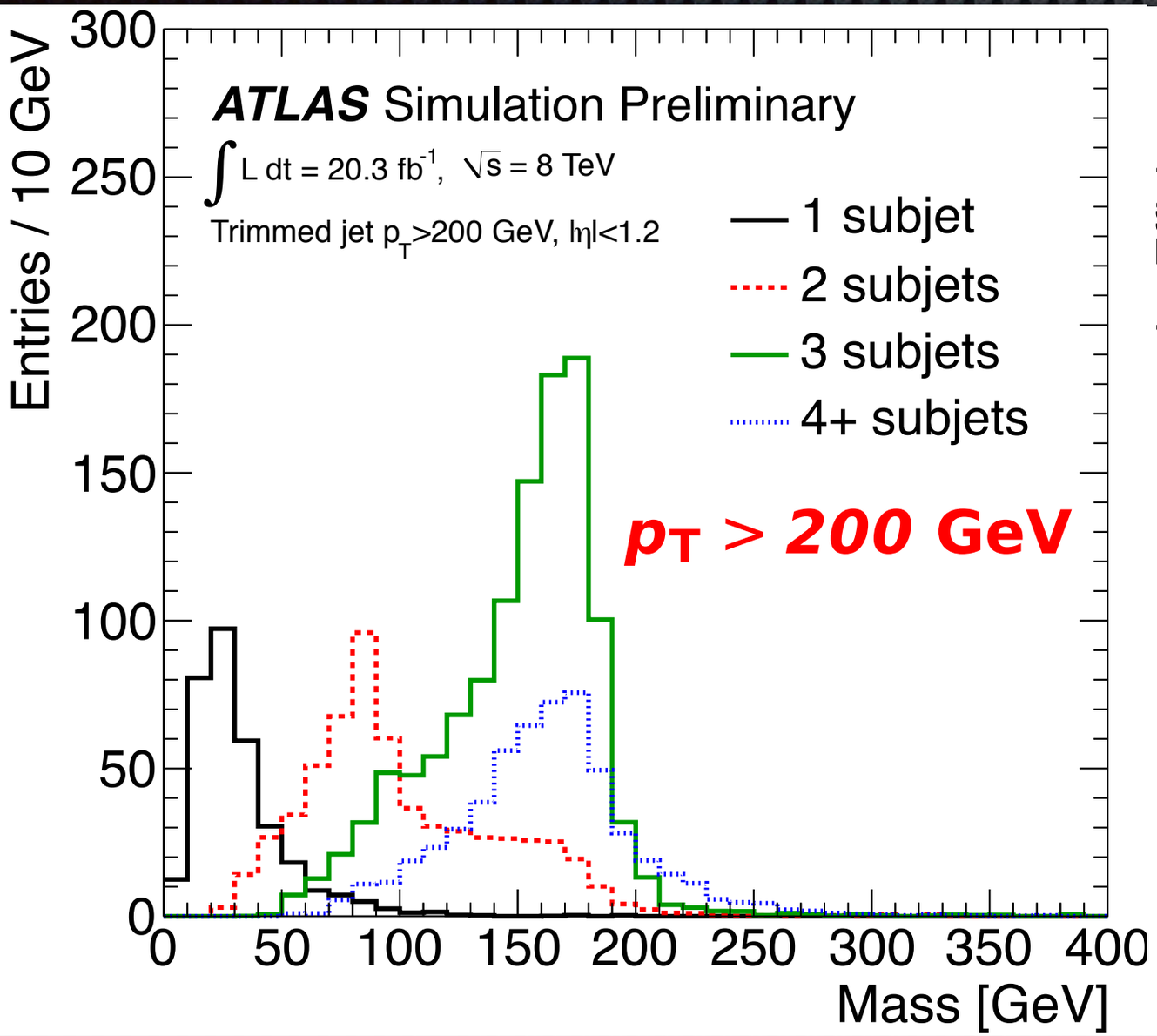

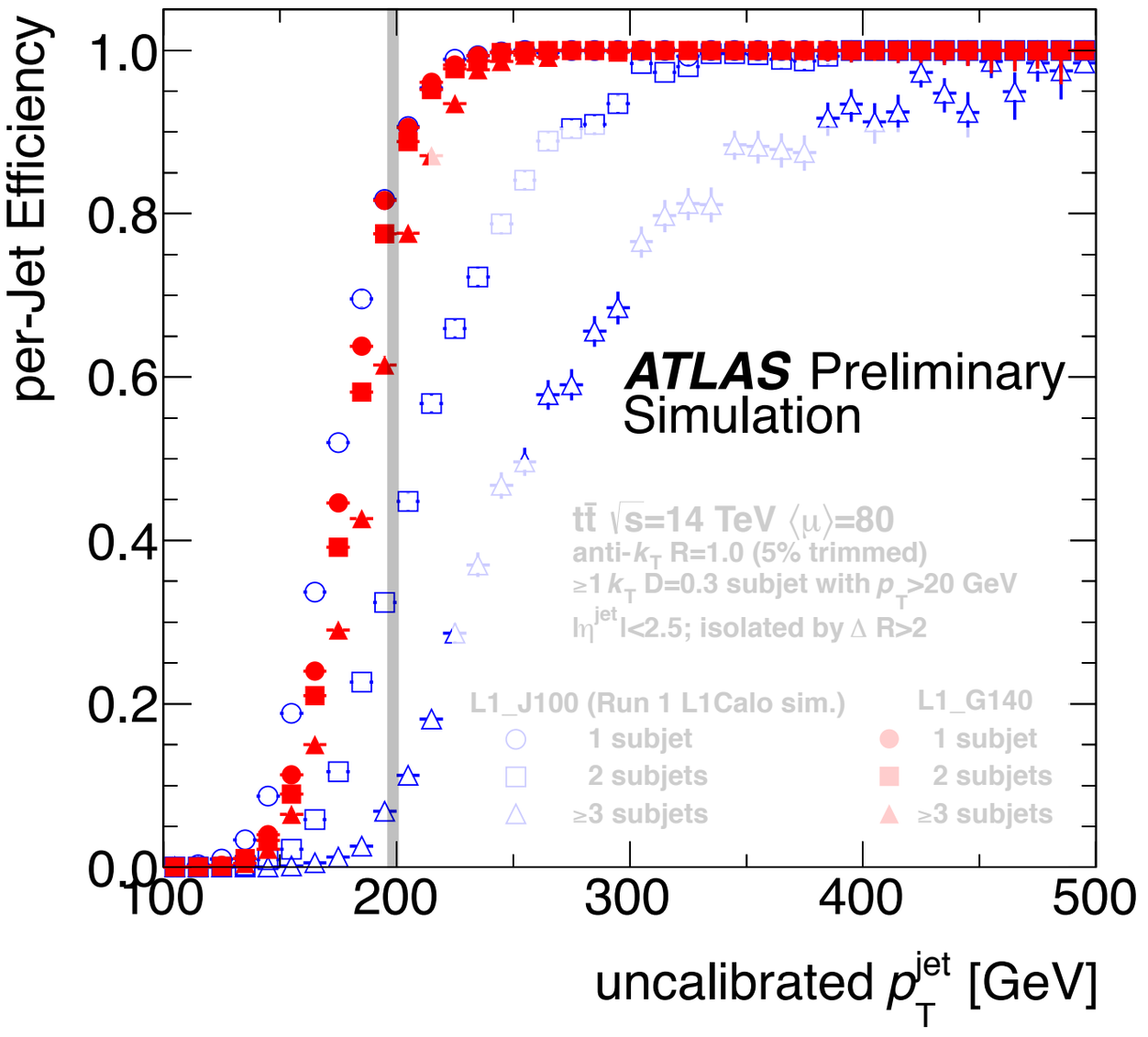

Red=gFEX Trigger @ 140 GeV

Triggering on Jet Substructure

Blue=Current Trigger @ 100 GeV

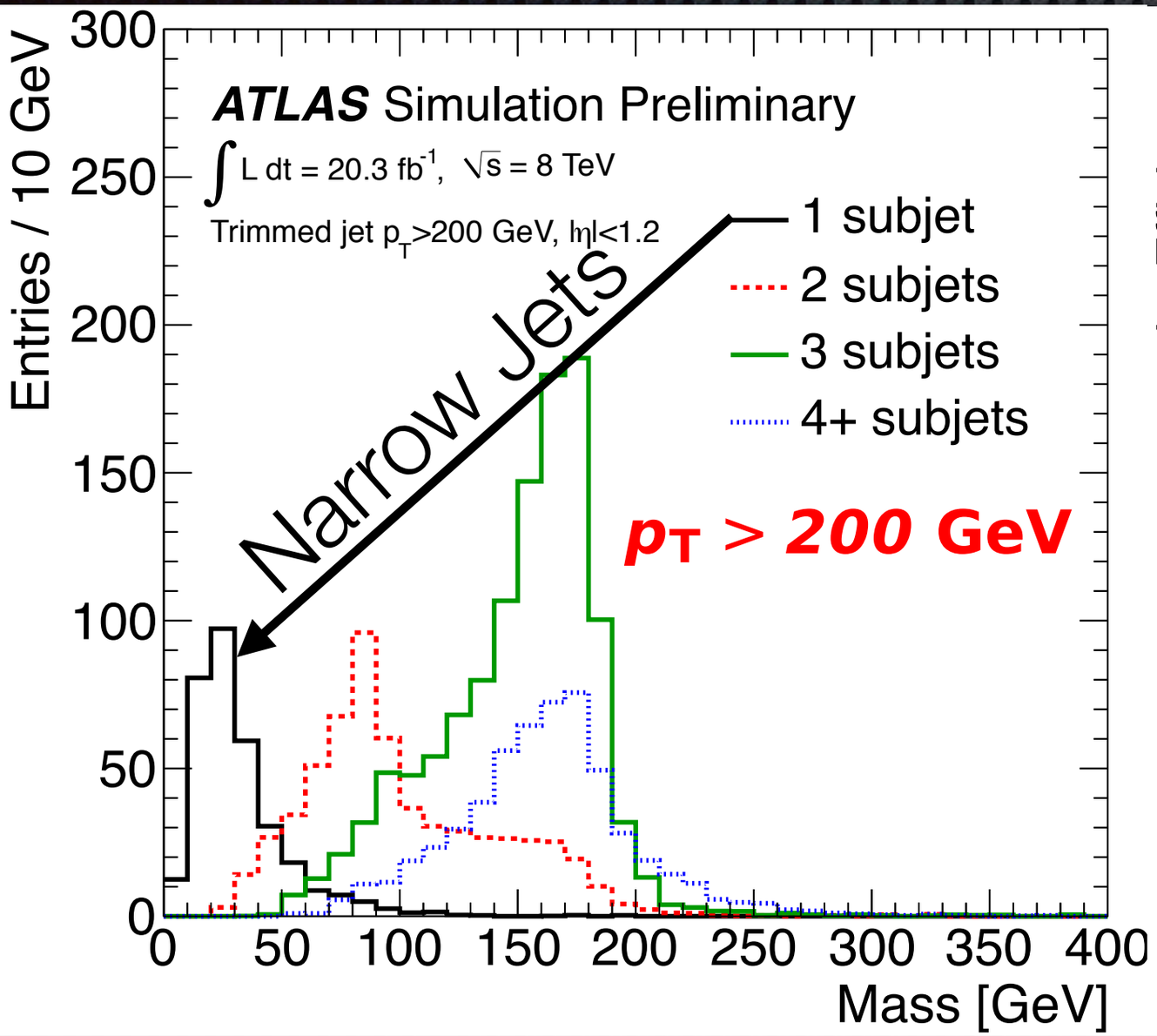

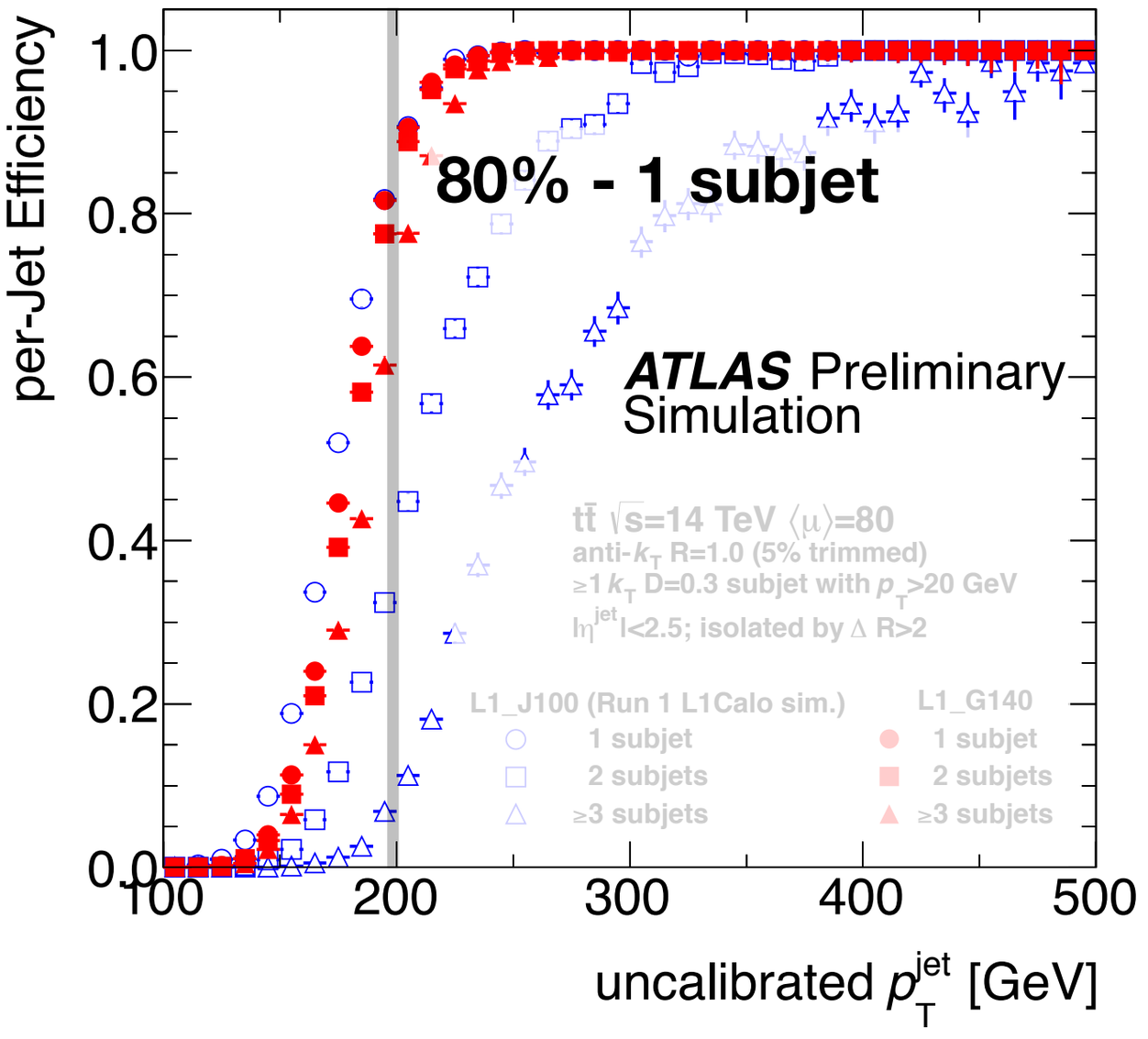

Red=gFEX Trigger @ 140 GeV

Triggering on Jet Substructure

Blue=Current Trigger @ 100 GeV

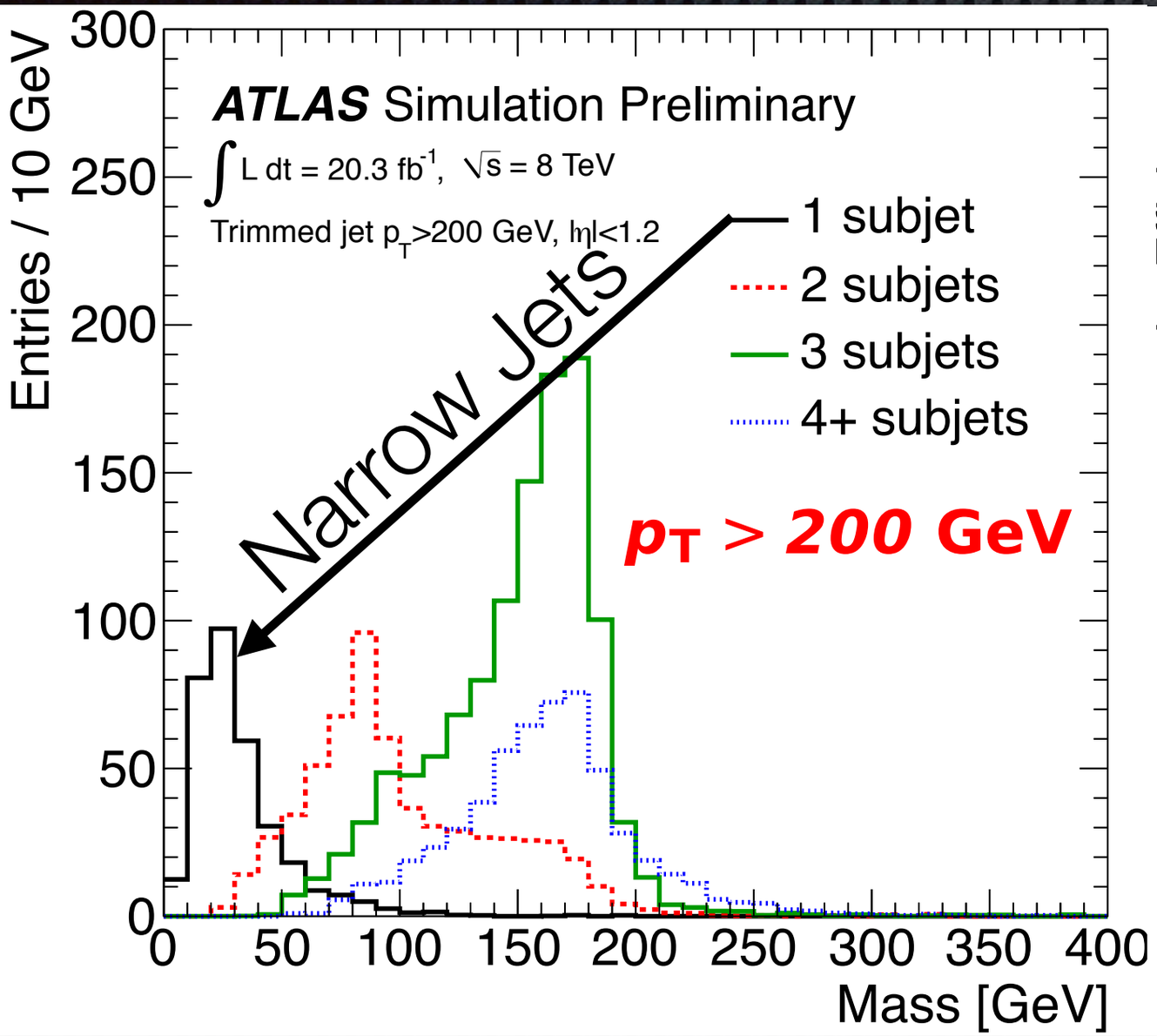

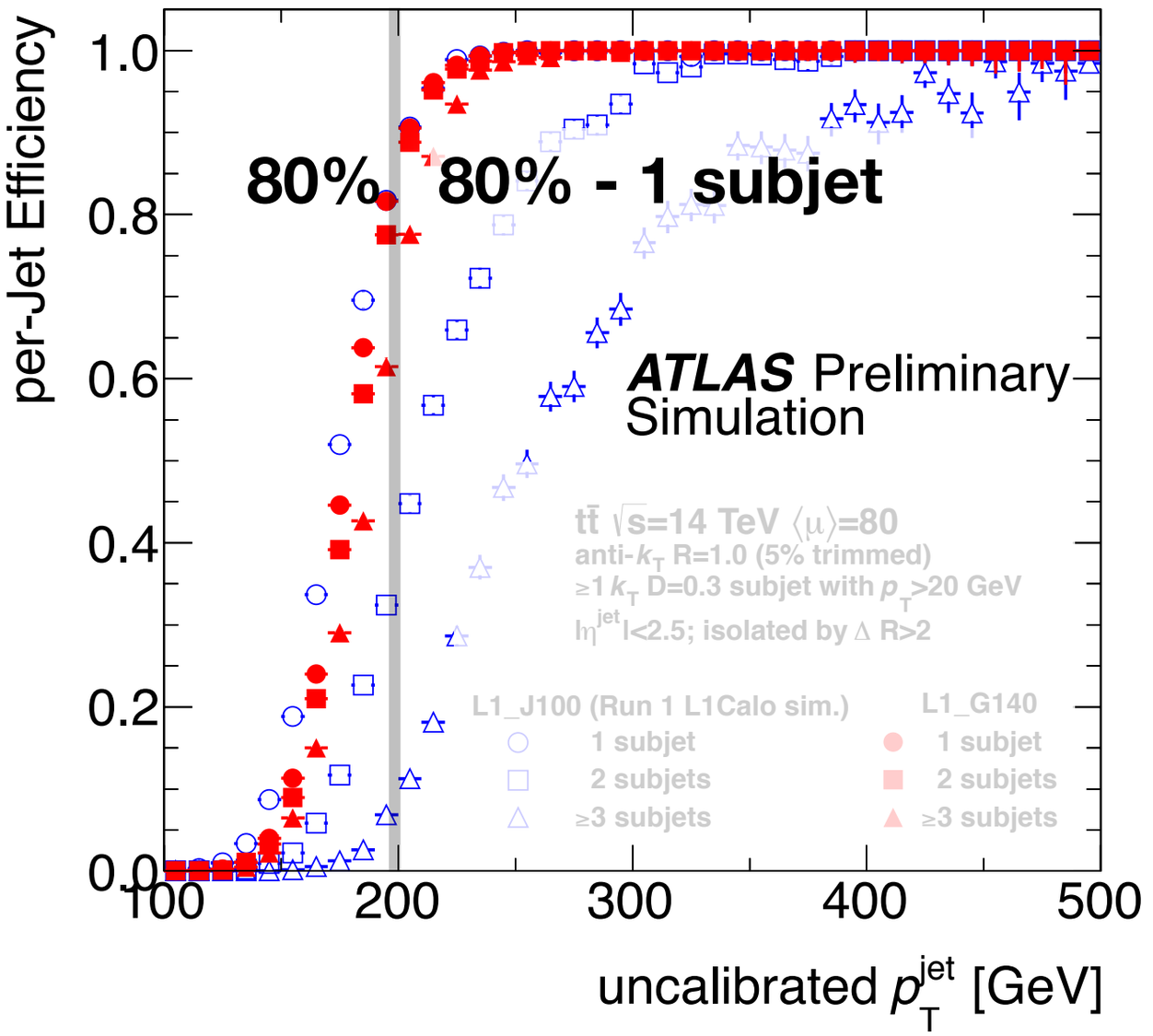

Red=gFEX Trigger @ 140 GeV

Triggering on Jet Substructure

Blue=Current Trigger @ 100 GeV

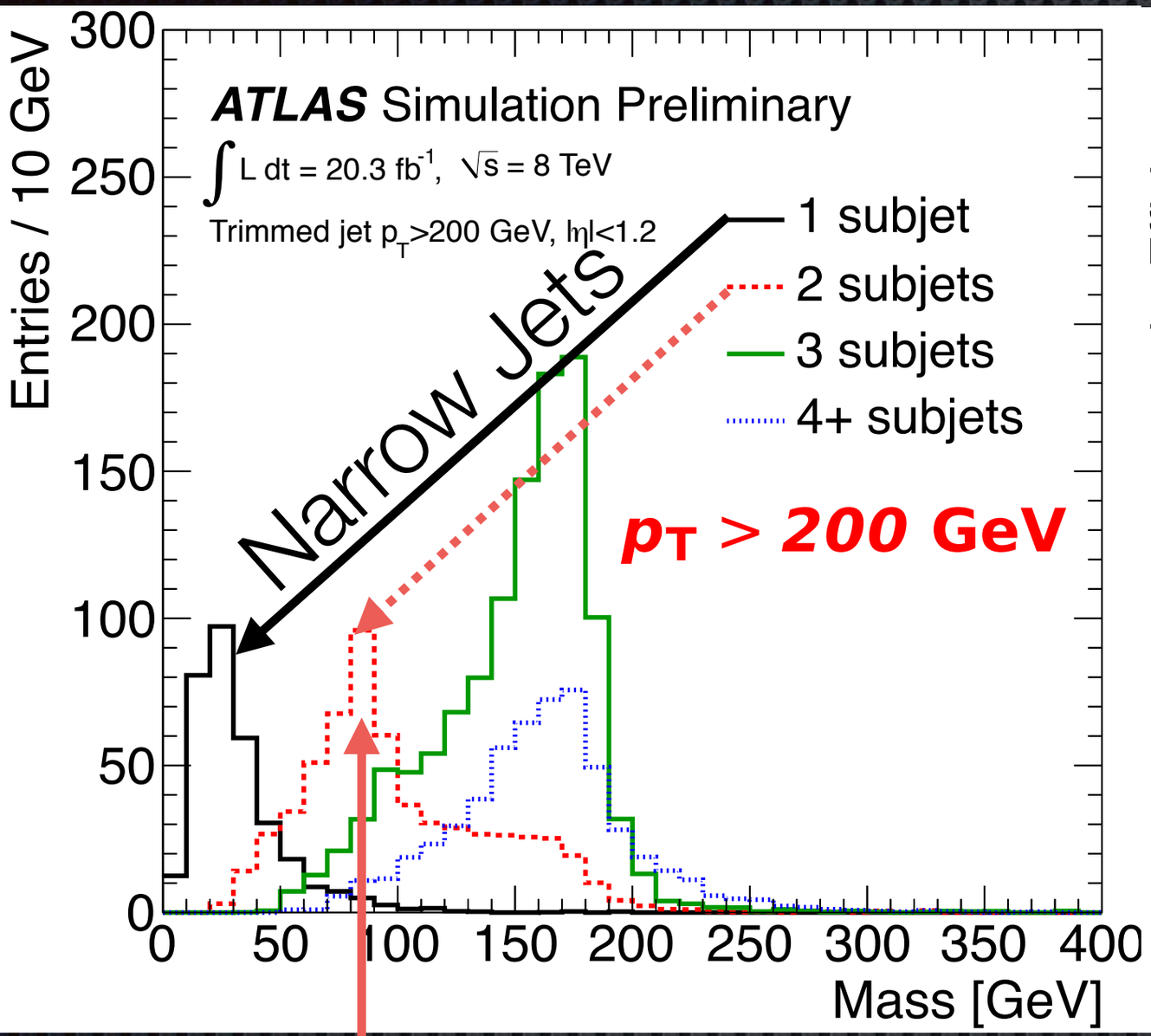

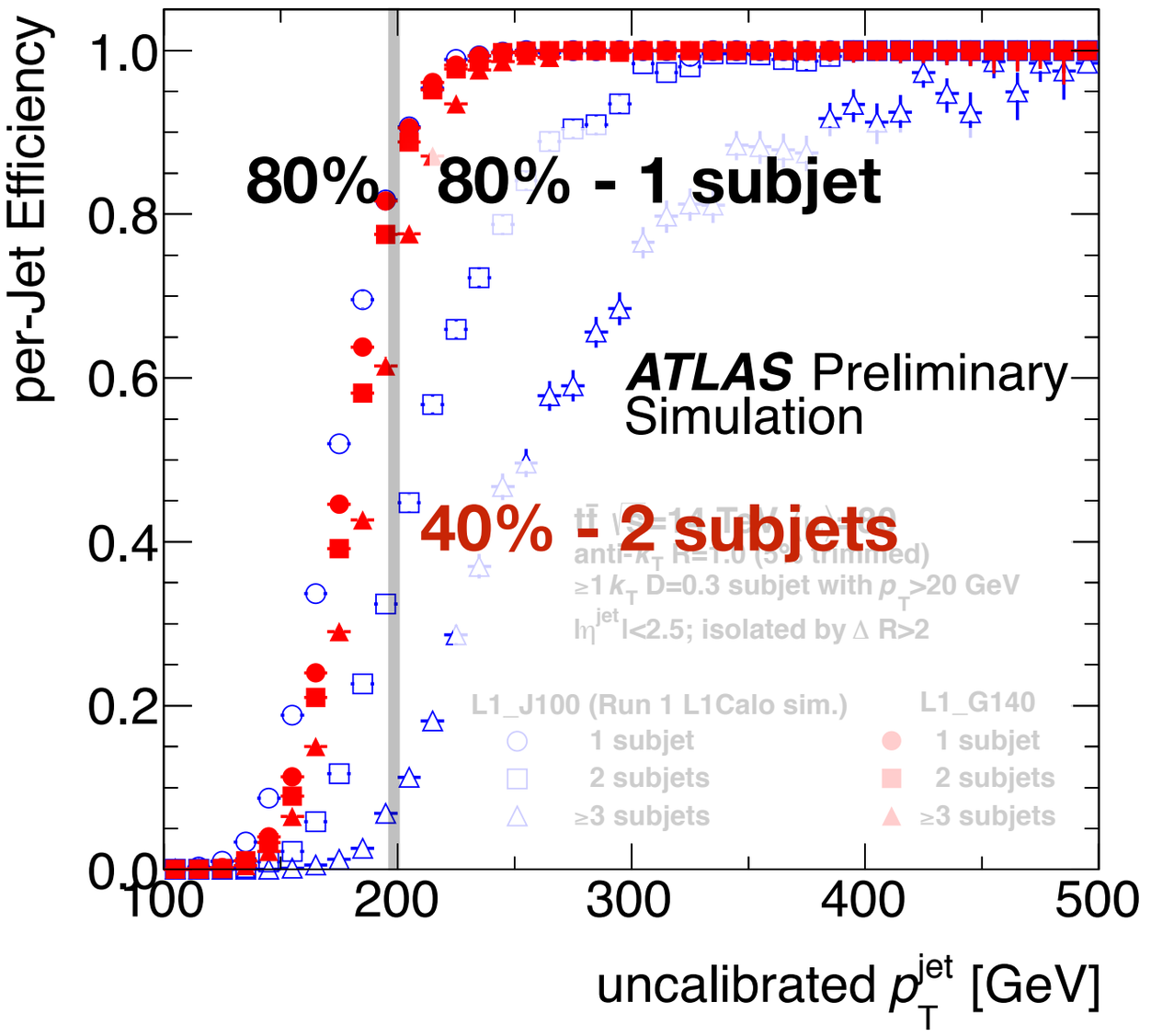

Red=gFEX Trigger @ 140 GeV

Triggering on Jet Substructure

Blue=Current Trigger @ 100 GeV

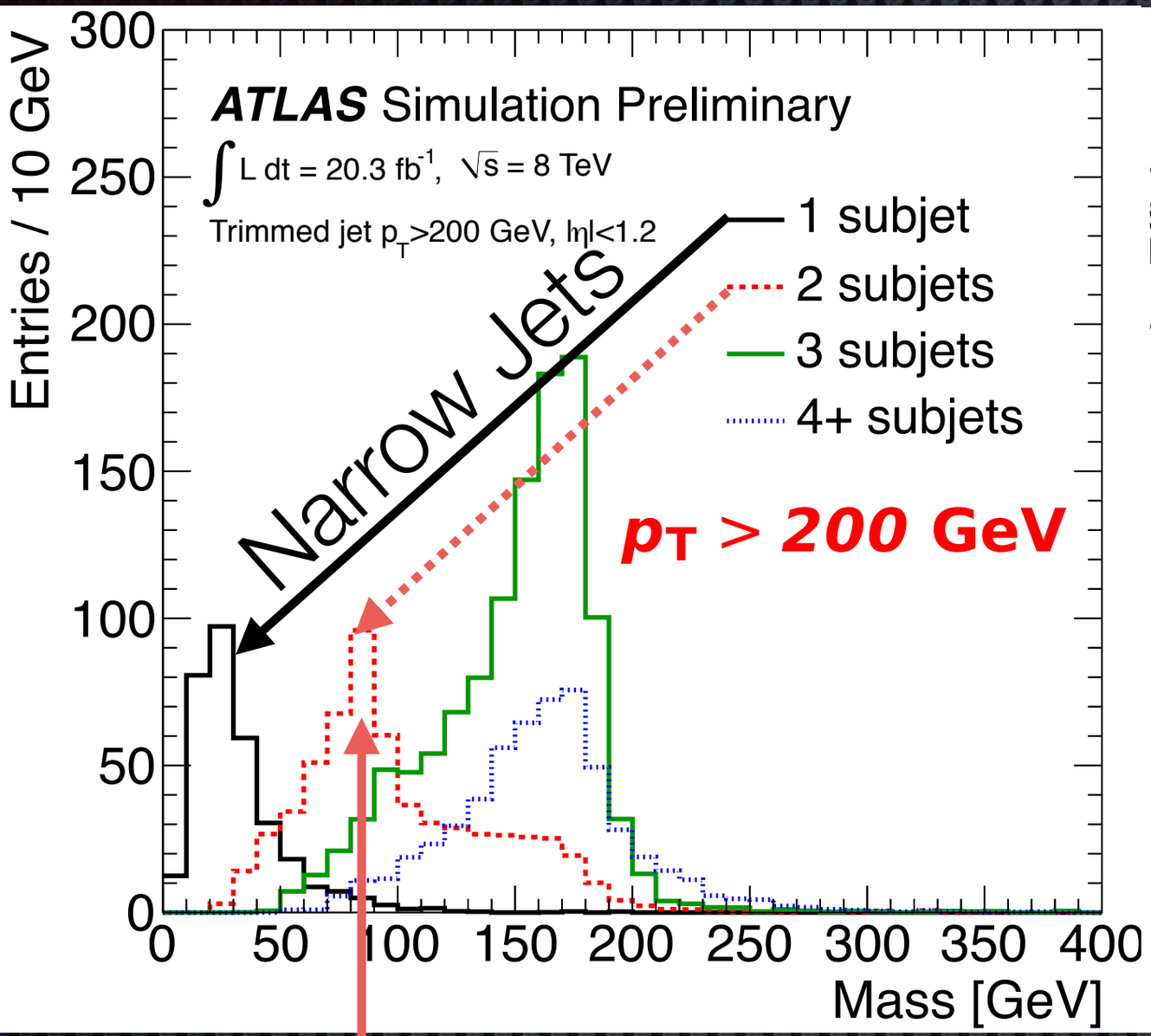

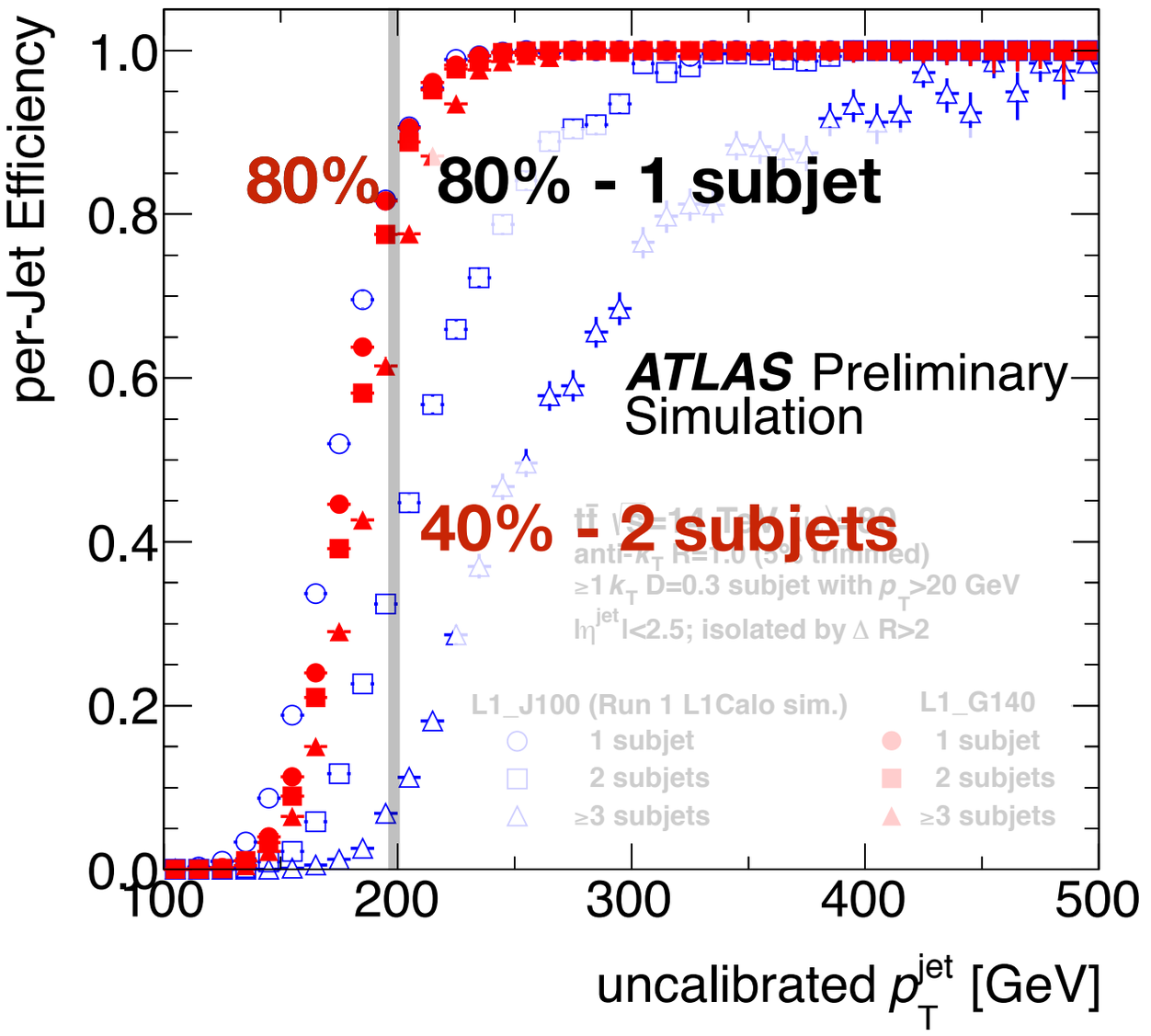

Red=gFEX Trigger @ 140 GeV

Triggering on Jet Substructure

Blue=Current Trigger @ 100 GeV

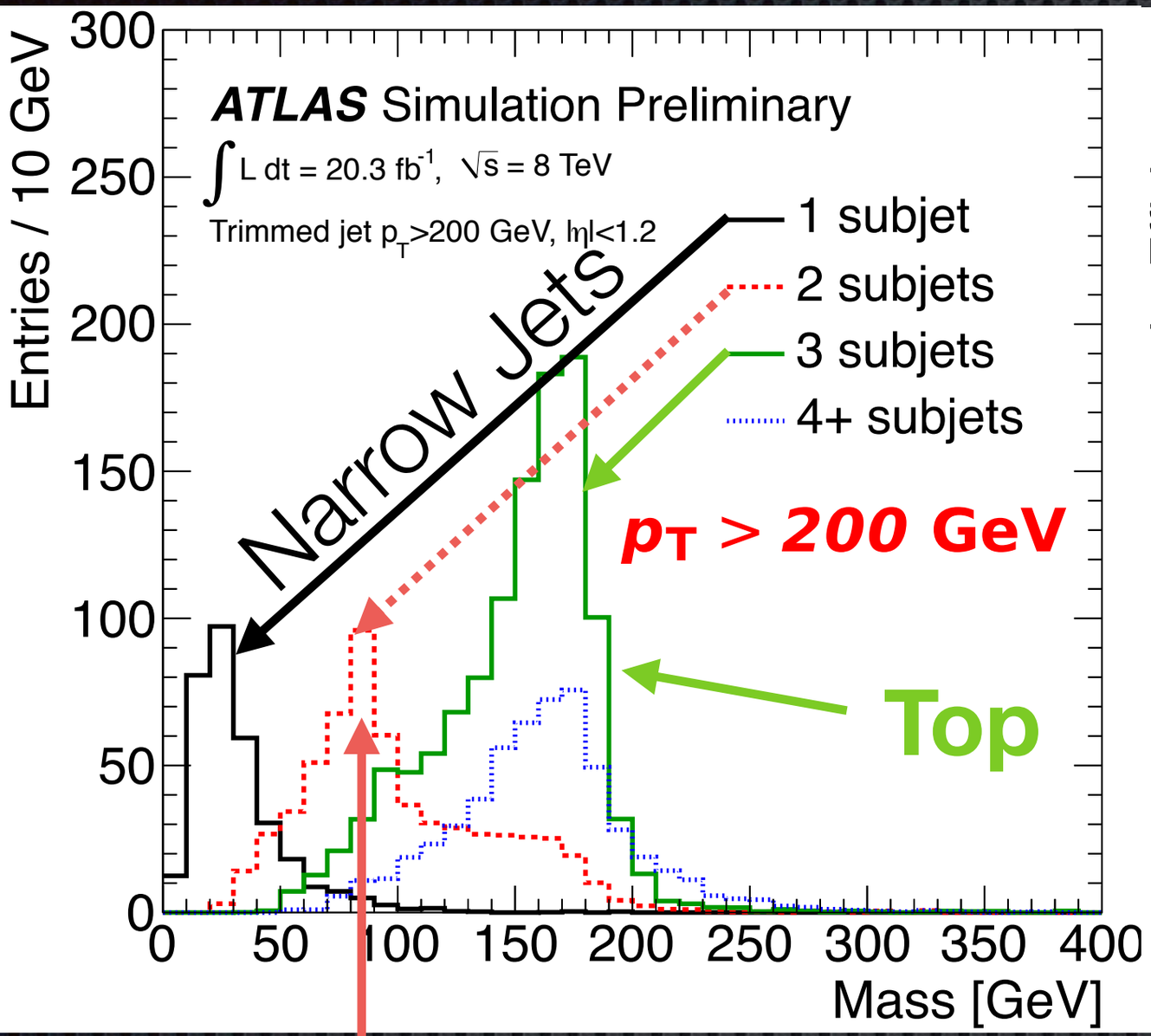

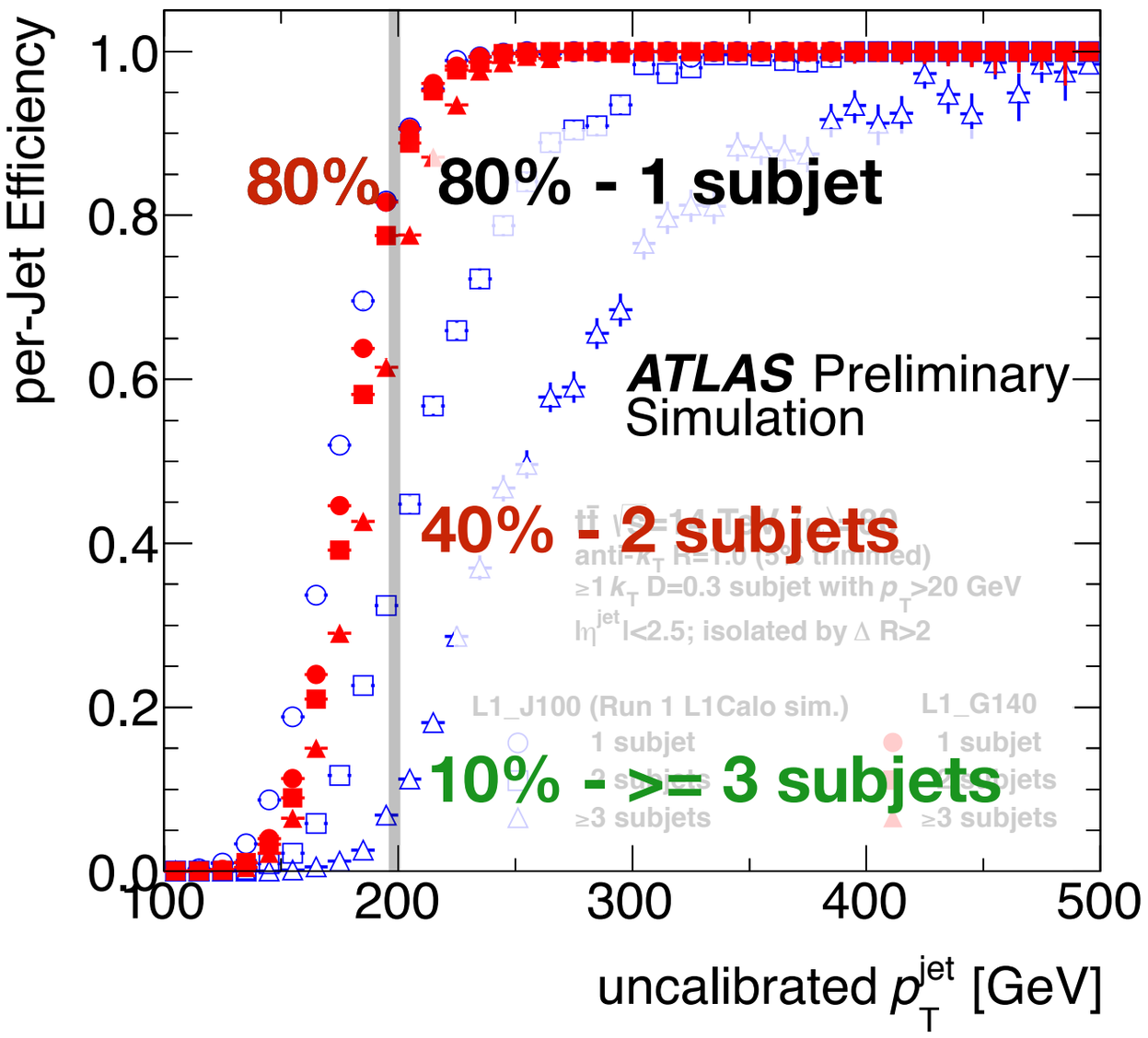

Red=gFEX Trigger @ 140 GeV

Triggering on Jet Substructure

Blue=Current Trigger @ 100 GeV

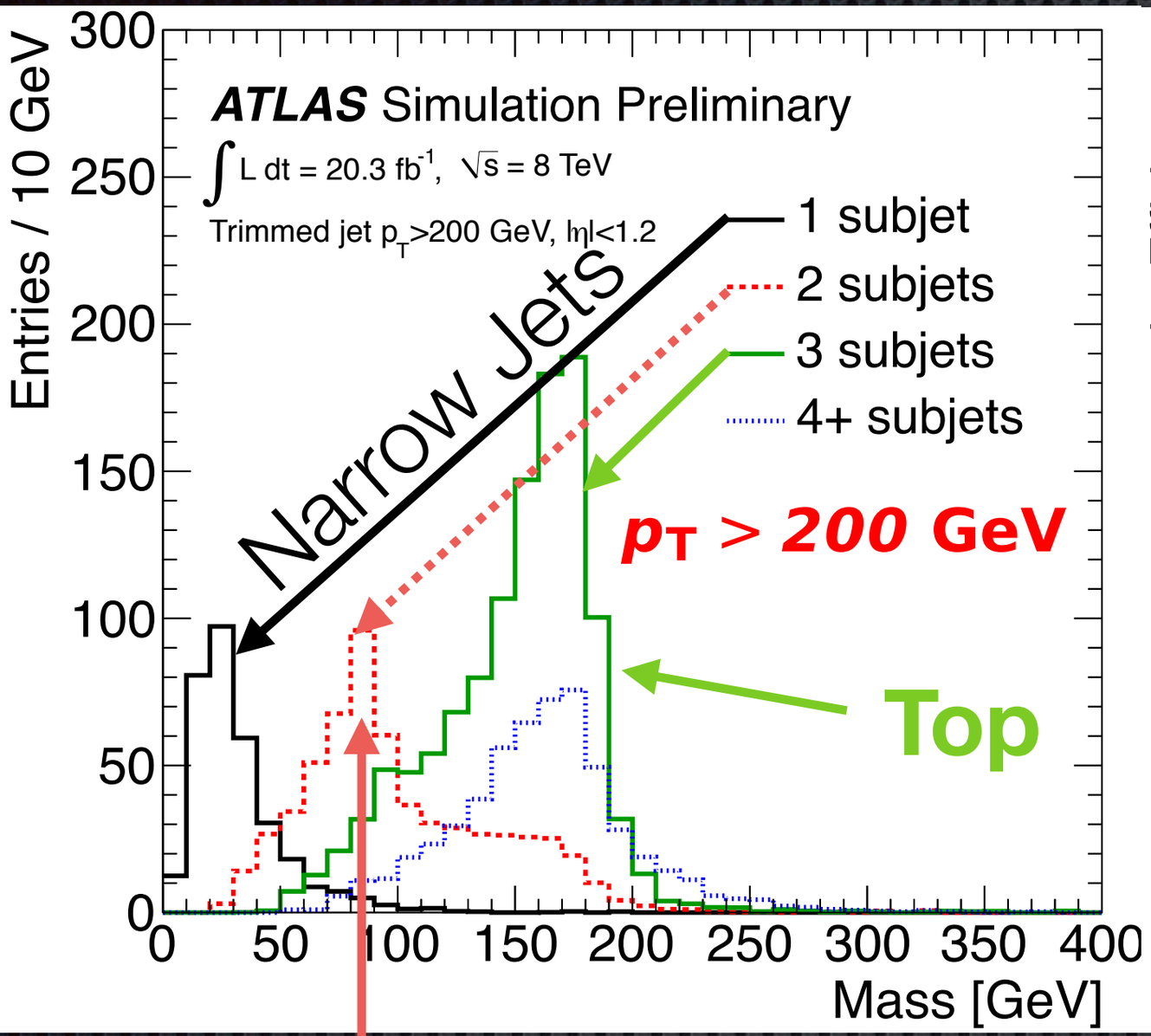

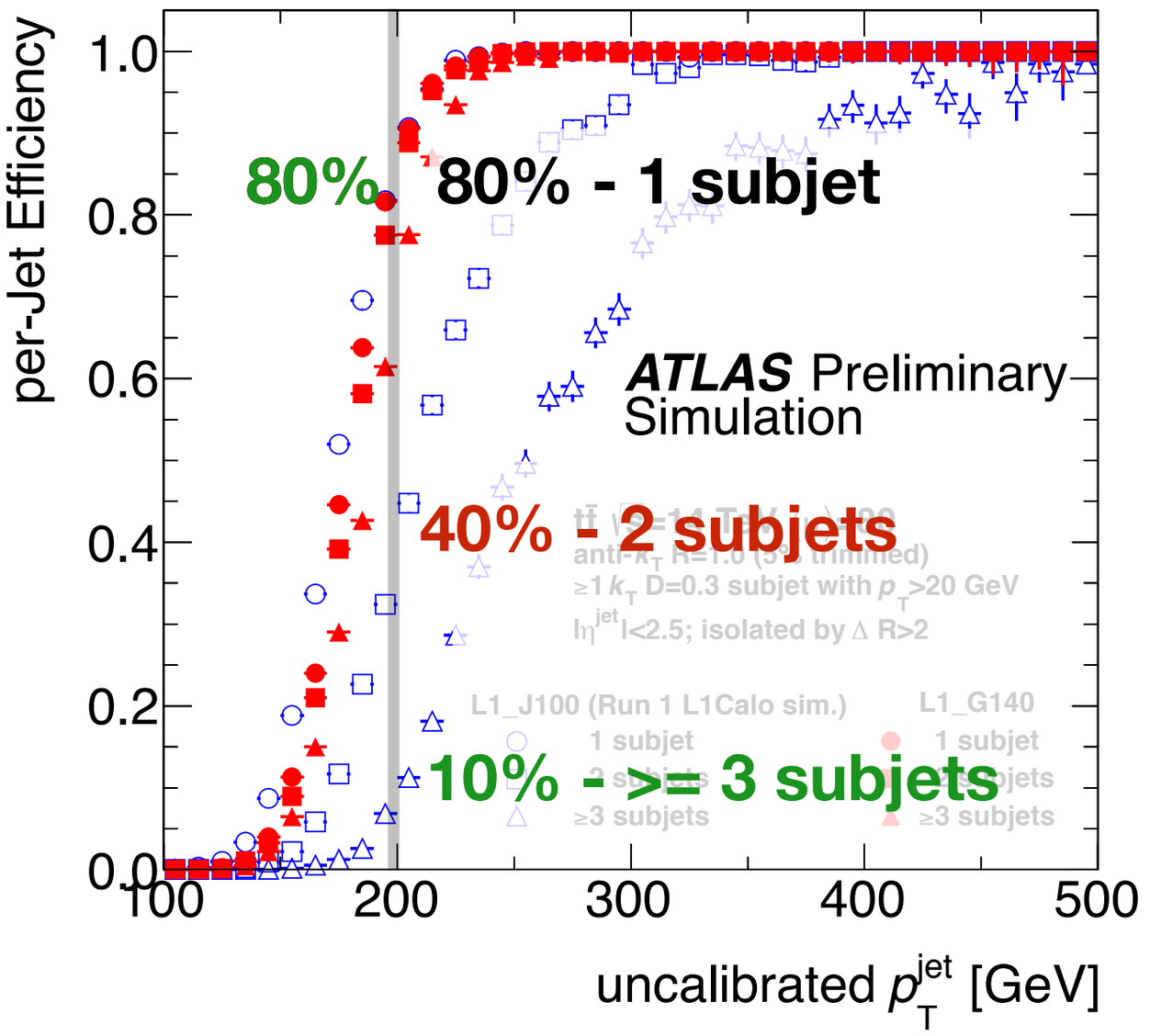

Red=gFEX Trigger @ 140 GeV

Triggering on Jet Substructure

Blue=Current Trigger @ 100 GeV

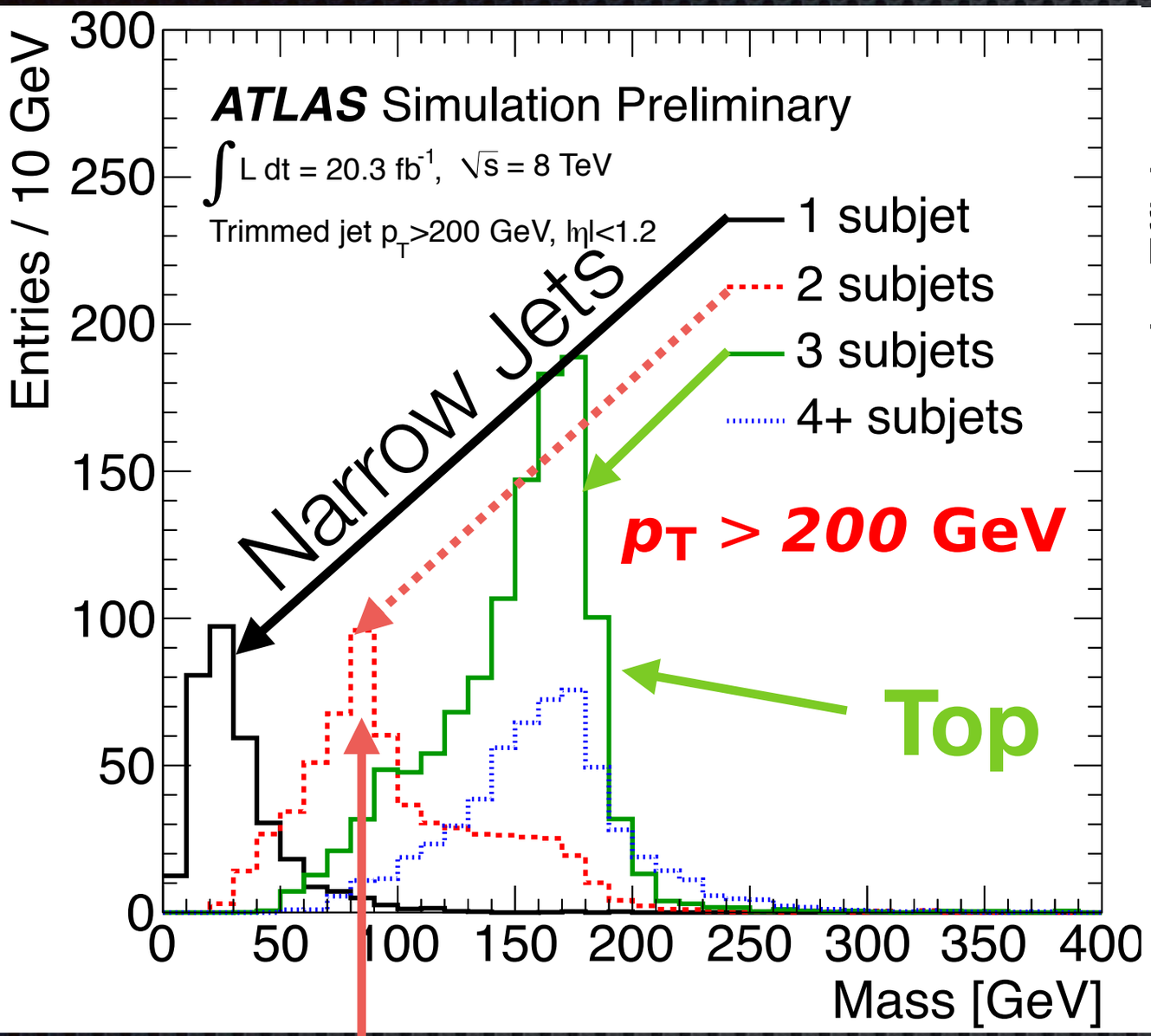

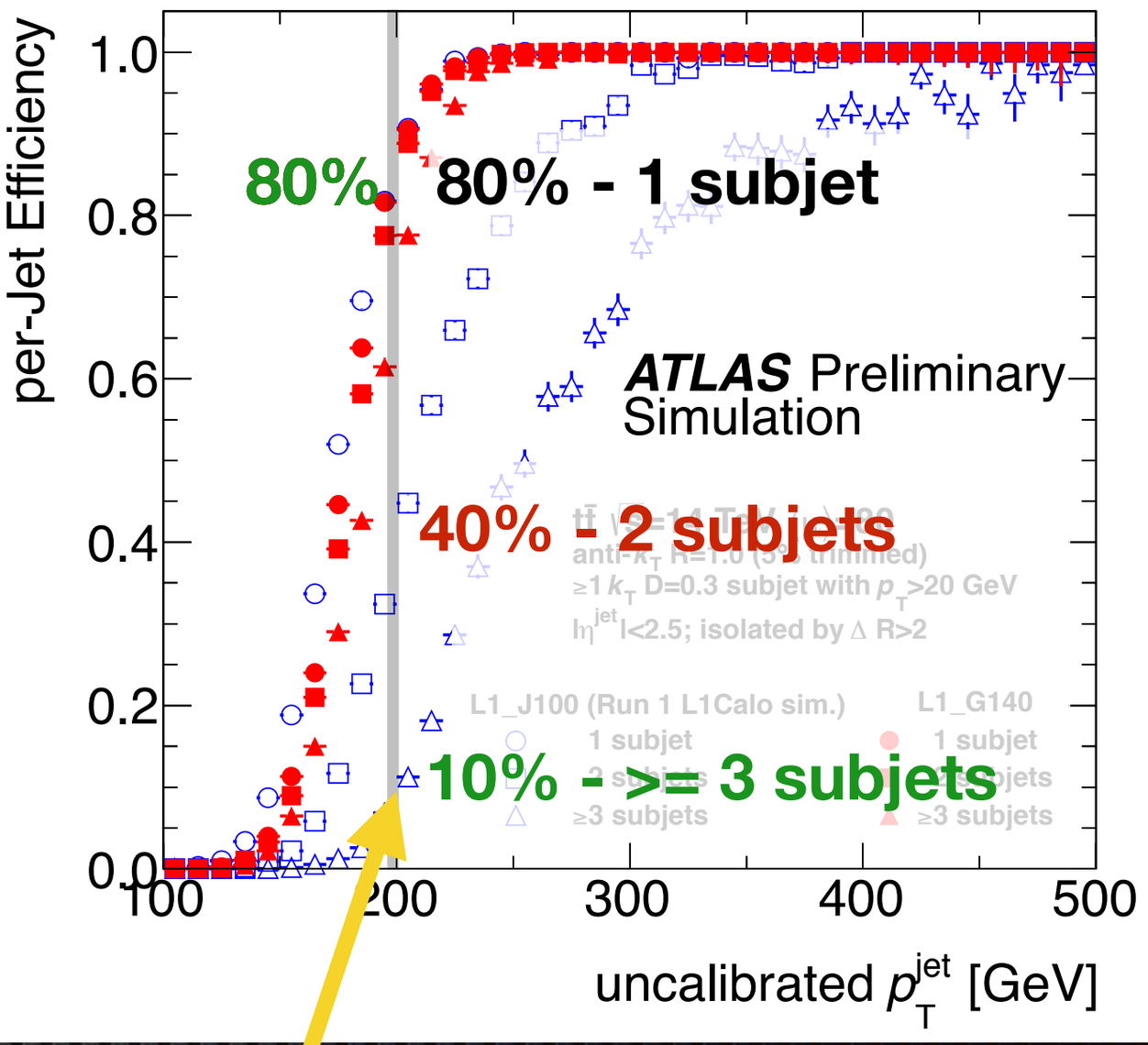

Red=gFEX Trigger @ 140 GeV

Current trigger is inefficient for jets with significant substructure

global Feature Extraction

LHC Run 3 — a new feature extraction module

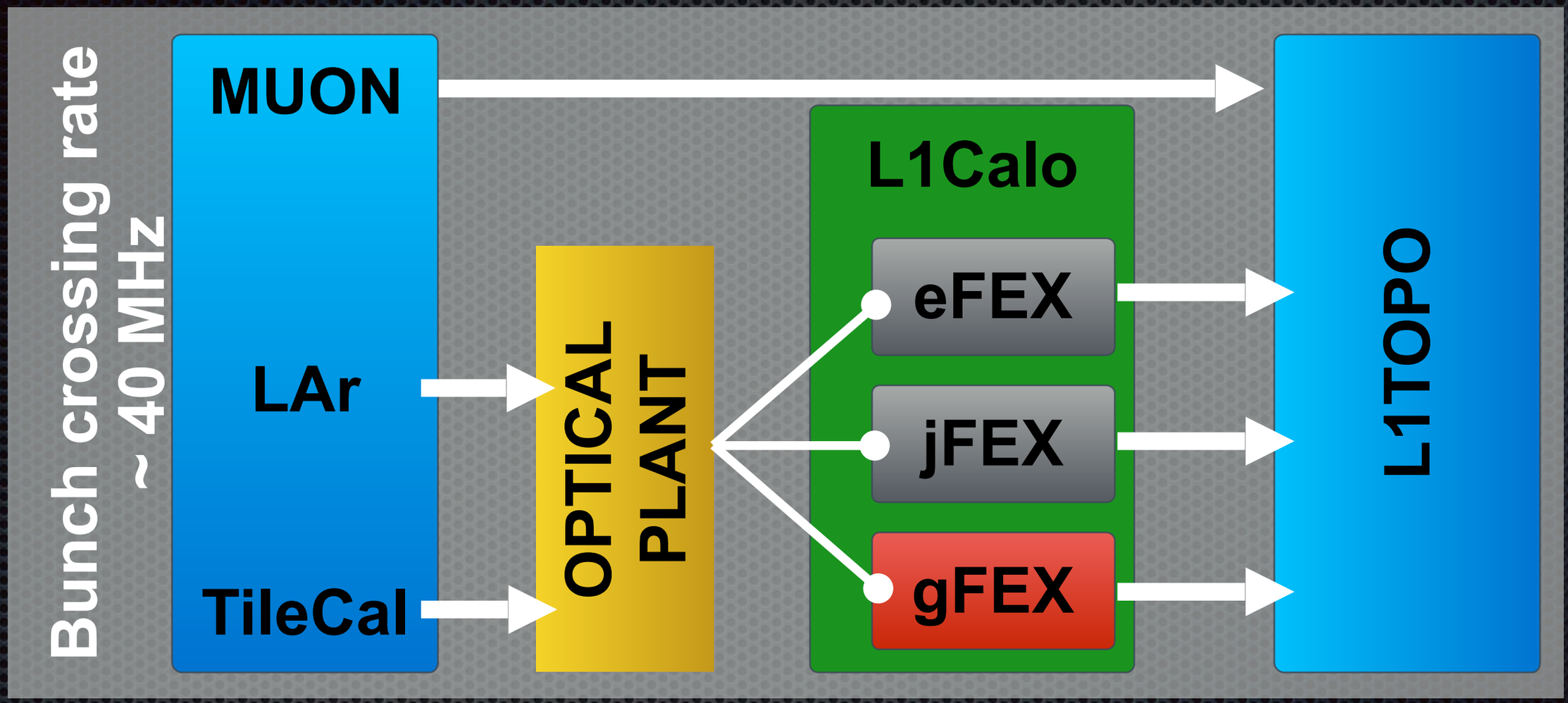

global Feature Extraction

LHC Run 3 — a new feature extraction module

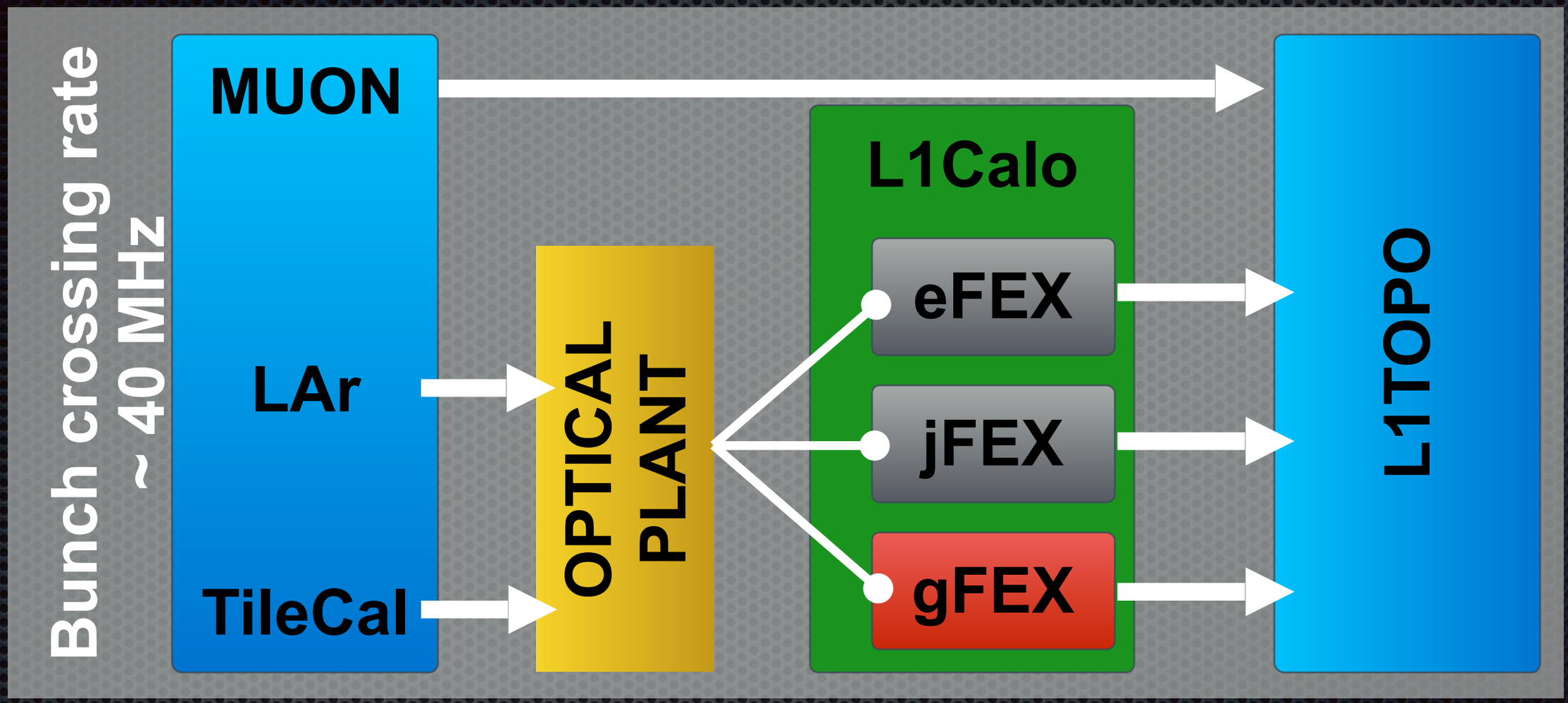

Our Solution: increase the RoI and processing speed, but some loss in angular resolution

global Feature Extraction

LHC Run 3 — a new feature extraction module

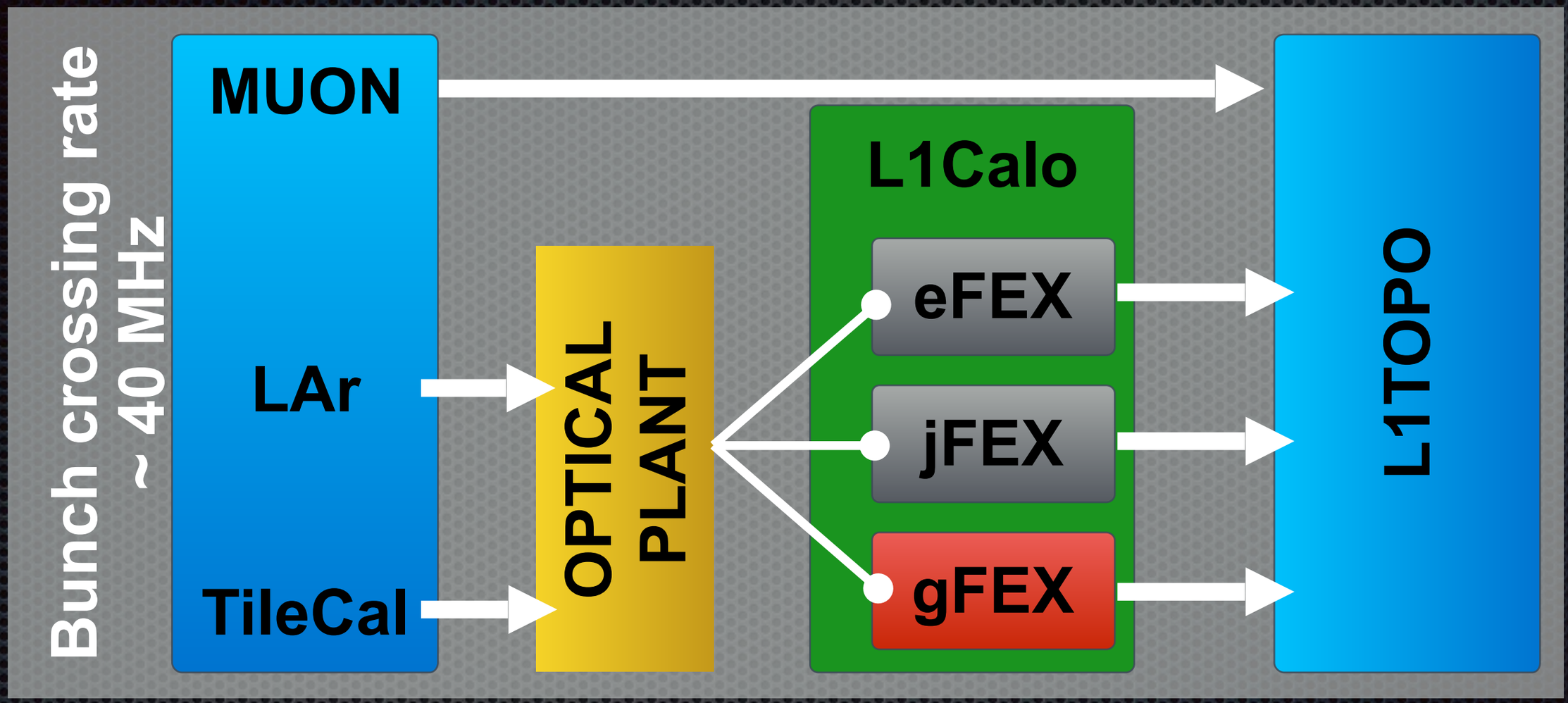

Our Solution: increase the RoI and processing speed, but some loss in angular resolution

- **algorithms run within 5 bunch crossings** (125 ns), not including data input/output

global Feature Extraction

LHC Run 3 — a new feature extraction module

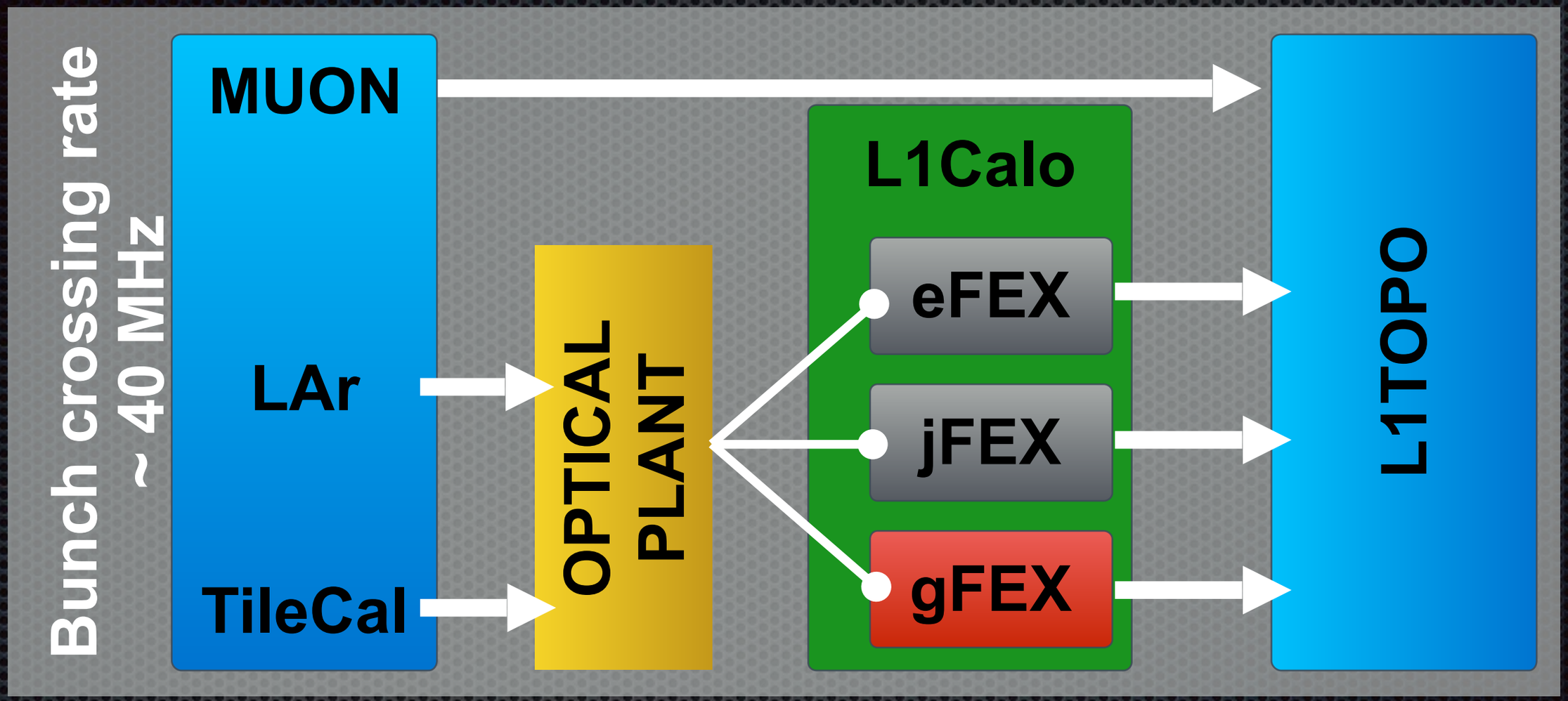

Our Solution: increase the RoI and processing speed, but some loss in angular resolution

- **algorithms run within 5 bunch crossings** (125 ns), not including data input/output
- L1Topo/HLT get info about **jets above a threshold and pileup calculation** for other triggers

global Feature Extraction

LHC Run 3 — a new feature extraction module

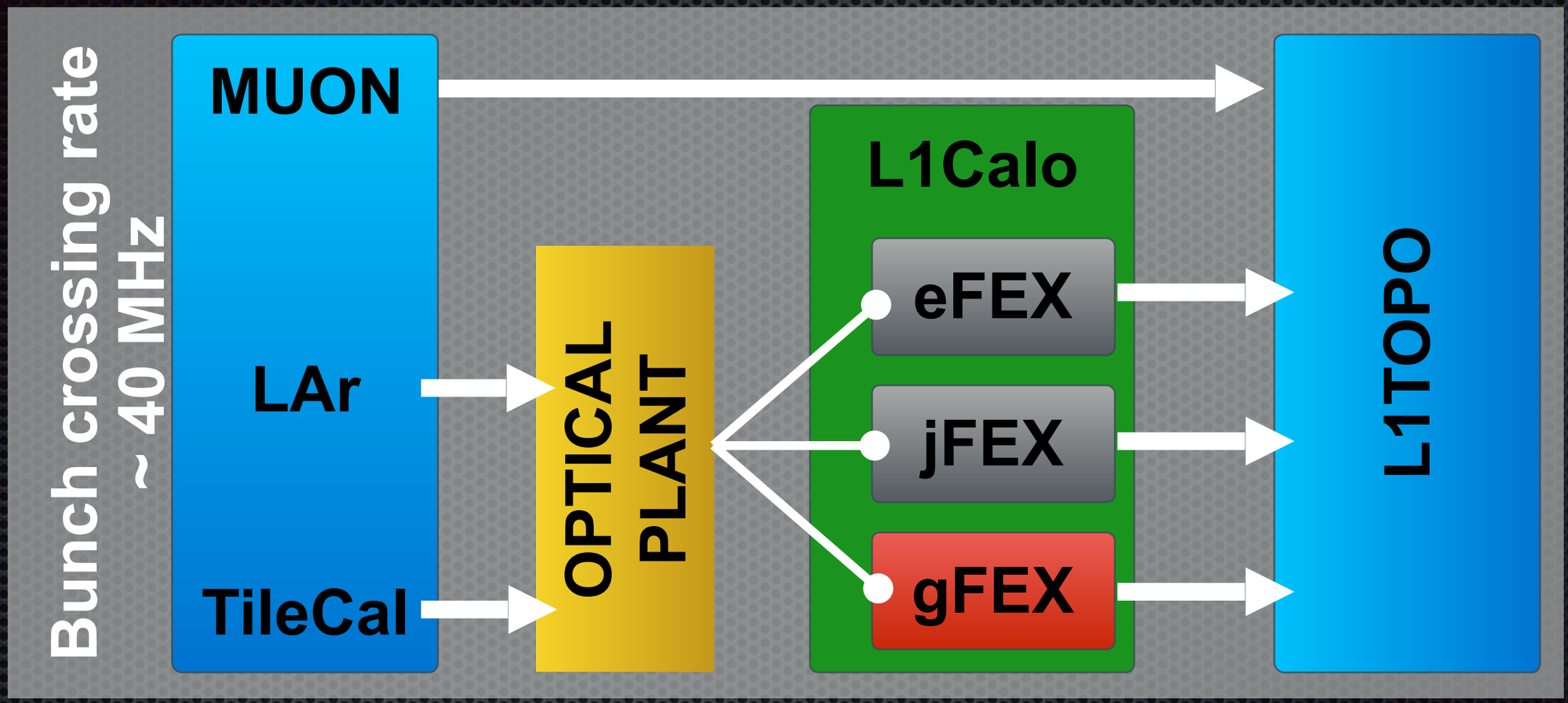

Our Solution: increase the RoI and processing speed, but some loss in angular resolution

- **algorithms run within 5 bunch crossings** (125 ns), not including data input/output
- L1Topo/HLT get info about **jets above a threshold and pileup calculation** for other triggers
- **full calorimeter information on a single board** enables calculation of global event quantities

What's inside?

Algorithms Run On FPGAs

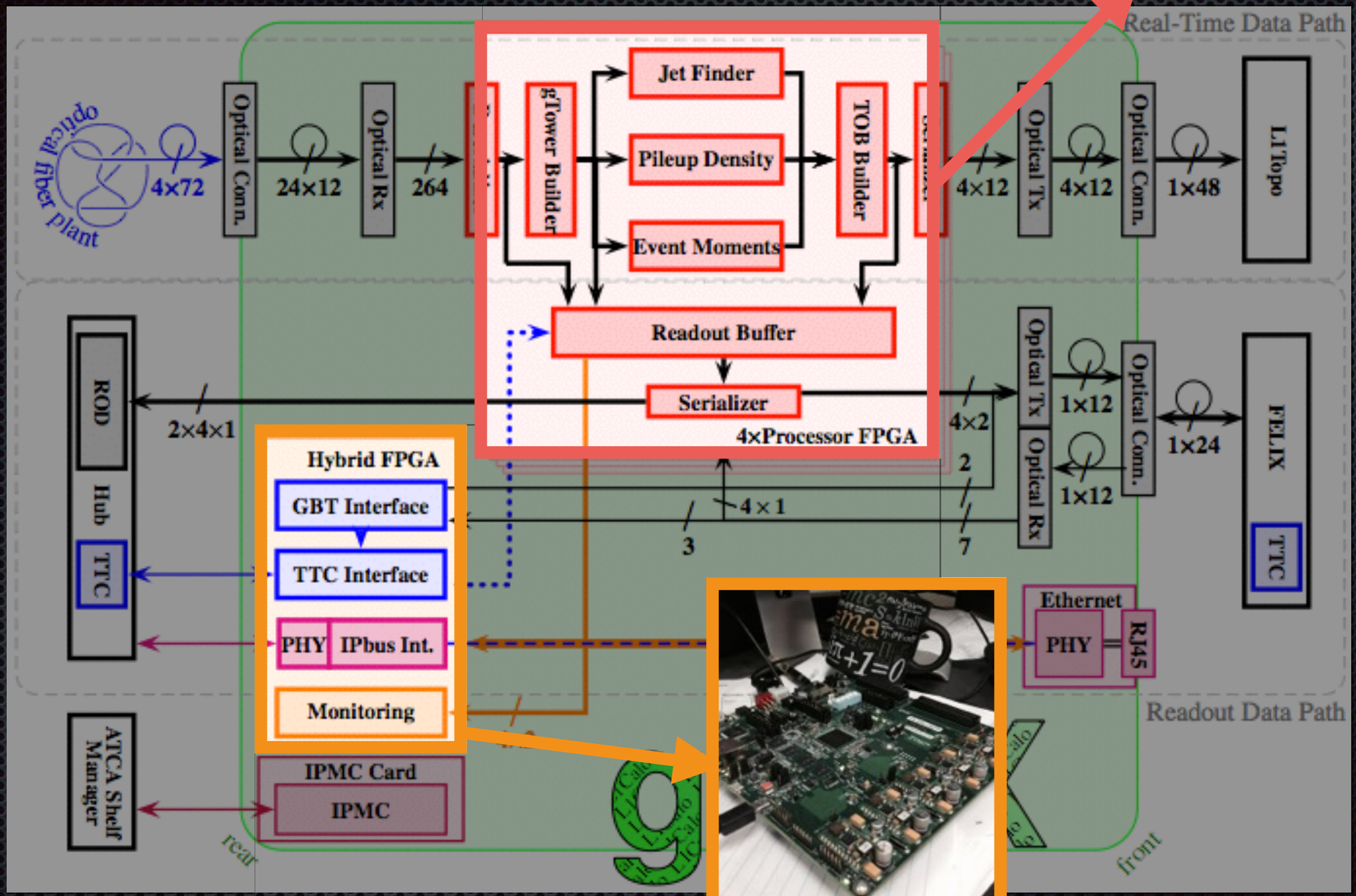

UChicago: Zynq Eval. Board — Slow Control and Monitoring

Pile-up Energy Density Calculations in the gFEX at the Level 1 Trigger

$t\bar{t}$

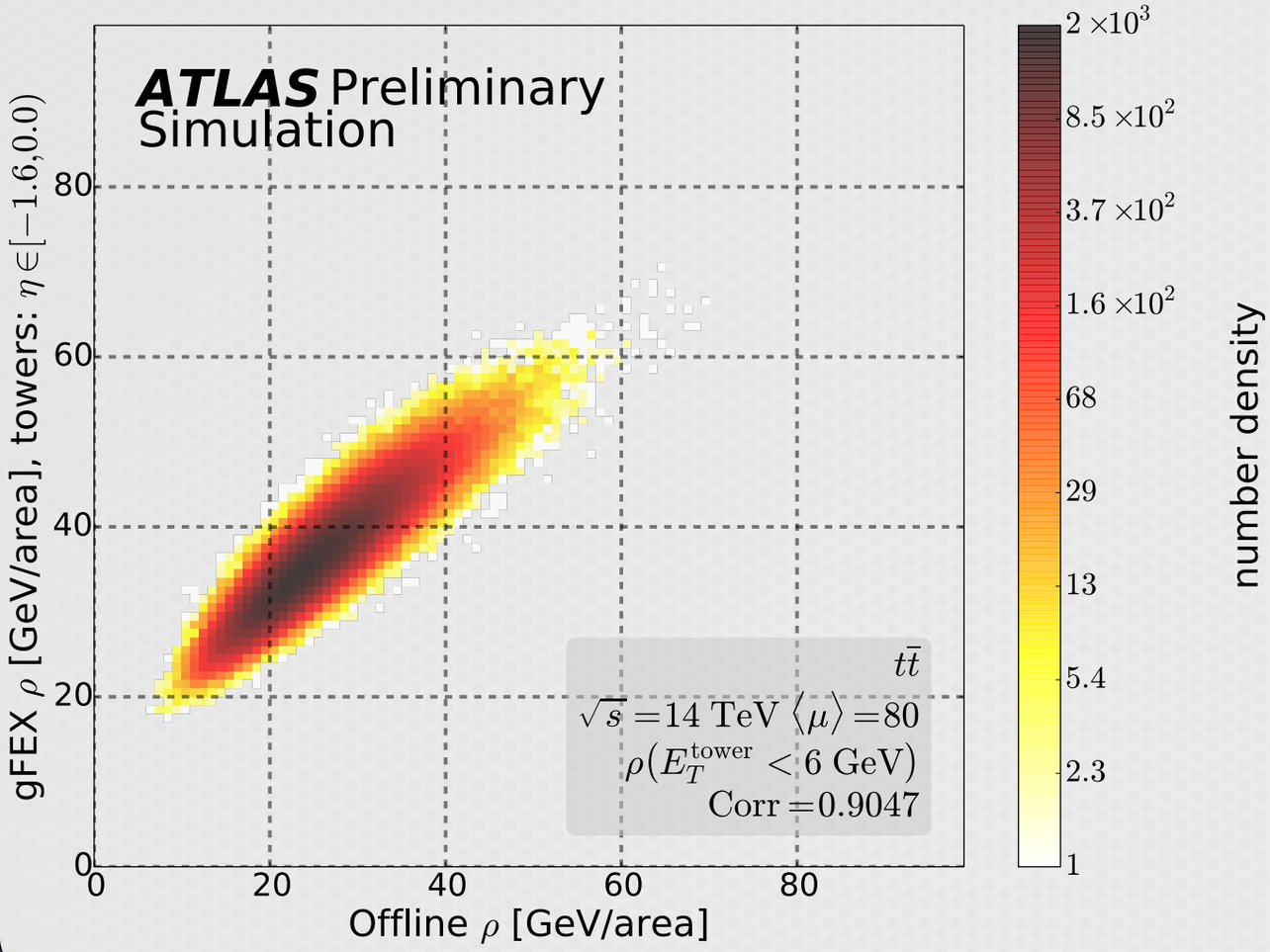

$ZH \rightarrow \nu\nu b\bar{b}$

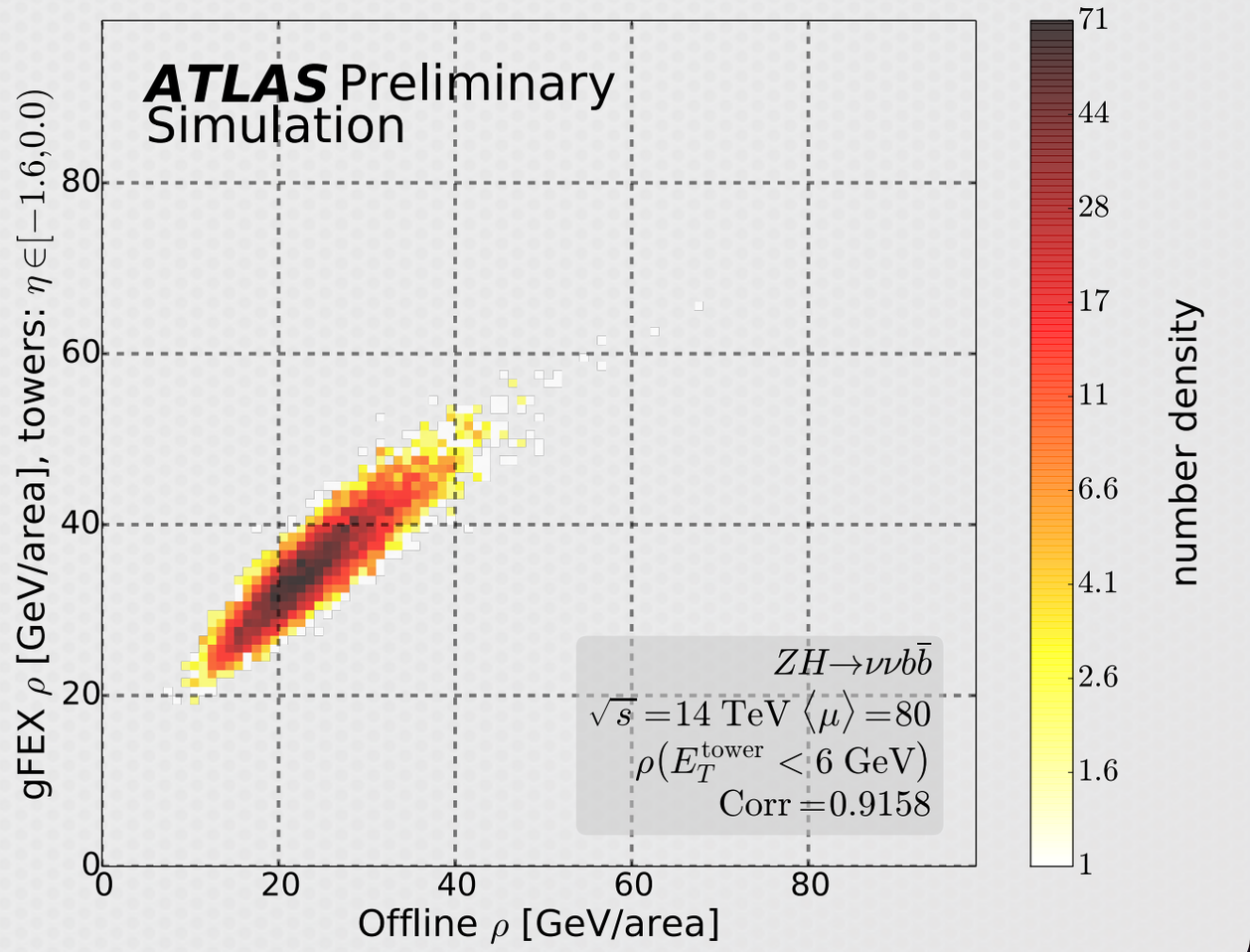

How does our simplified calculation of pileup density match up to the corresponding offline calculation?

The pile-up does not depend on the physics processes we're studying.

Adapted from https://cds.cern.ch/record/1749167

The Takeaway

The Takeaway

- **What are we doing?**
  - Building a large-R jet trigger for Run 3 and beyond
  - Estimating pileup for jet-level corrections

The Takeaway

- **What are we doing?**
  - Building a large-R jet trigger for Run 3 and beyond
  - Estimating pileup for jet-level corrections
- **Why are we doing it?**
  - We expect to see more jets with substructure in the future

The Takeaway

- **What are we doing?**
  - Building a large-R jet trigger for Run 3 and beyond
  - Estimating pileup for jet-level corrections
- **Why are we doing it?**
  - We expect to see more jets with substructure in the future
- **What makes gFEX special?**
  - Full calorimeter on a single board
  - Maintains trigger efficiency for various jet substructures
  - **[ongoing]** 0.2 x 0.2 (η × ϕ) tower region can be used as a proxy for subjets