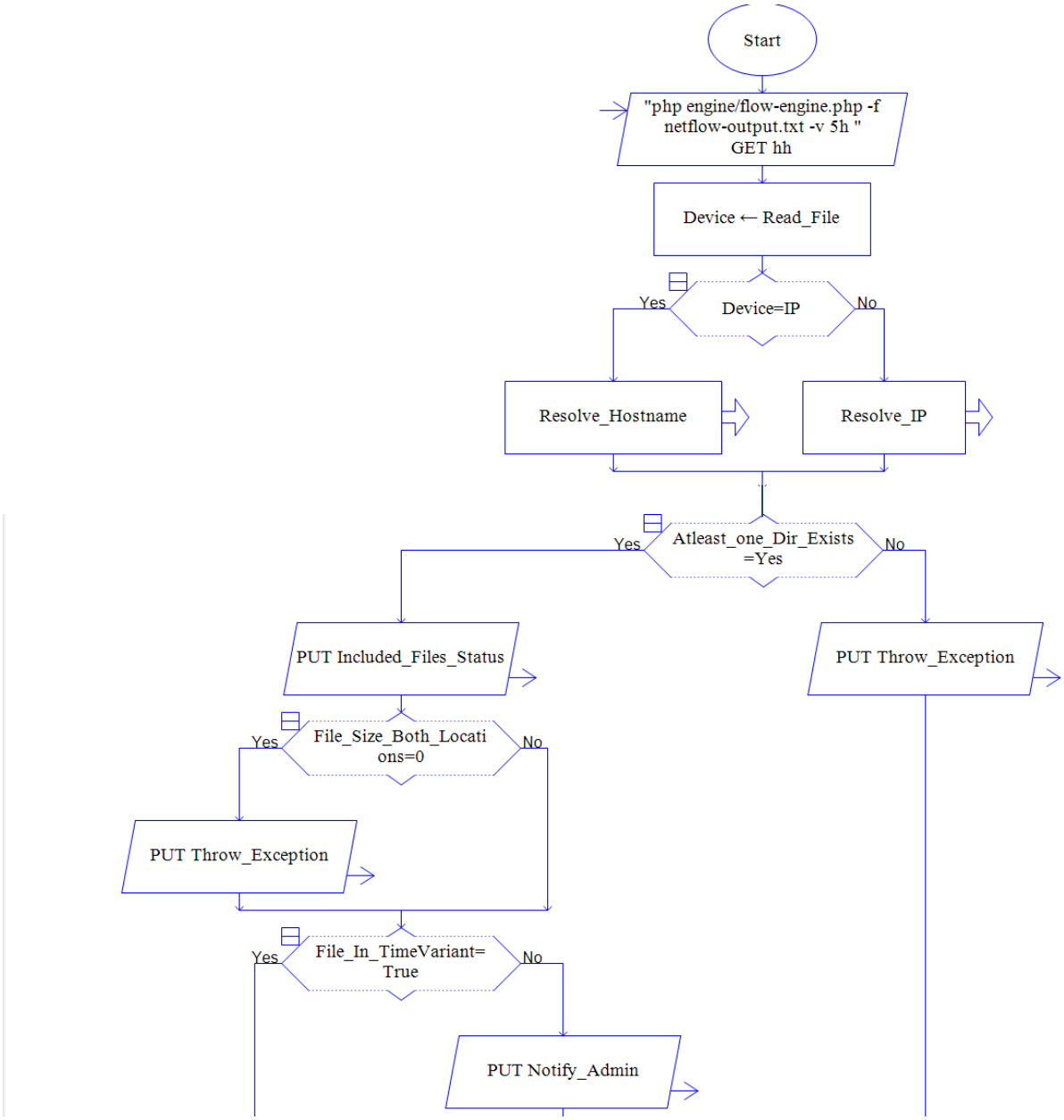
Start
"php engine/flow-engine.php -f netflow-output.txt -v 5h " GET hh
Device ← Read_File
Device=IP
Yes
No
Resolve_Hostname
Resolve_IP
Atleast_one_Dir_Exists =Yes
Yes
No
PUT Included_Files_Status
PUT Throw_Exception
File_Size_Both_Locations=0
Yes
No
PUT Throw_Exception
File_In_TimeVariant= True
Yes
No
PUT Notify_Admin

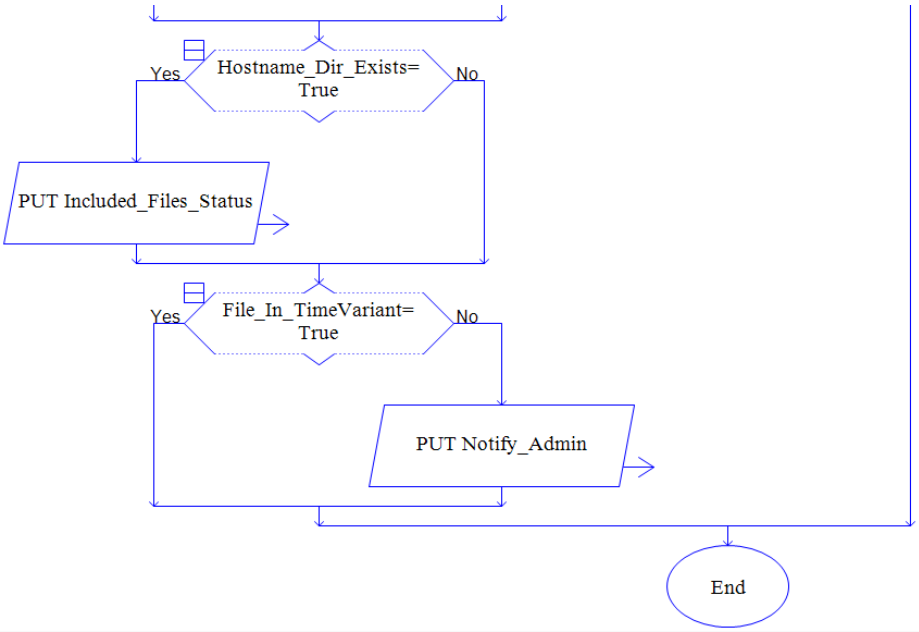
Hostname_Dir_Exists=
True
Yes
No
PUT Included_Files_Status
File_In_TimeVariant=
True
Yes
No
PUT Notify_Admin
End