Investigating antiproton channeling at the Tevatron

Dick Carrigan, Fermilab

- Negative particle physics, dechanneling lengths
- Working with Tevatron antiprotons
- What is an *experiment*?
- Stuff- E0 collimator, BLM at E0, crystal, etc.
- Going forward- study paper? proposal? hardware

Negative particle dechanneling for heavy particles

- Dechanneling –physics directly relates to the interaction of ions in an oriented solid
- Dechanneling is at the heart of channeling collimation
- **Good dechanneling information needed for precision modeling of collimation**
- Negative particle channeling gets a different handle on the independent effects of electron cloud and positive planes of atomic centers. (Likewise for VR, axial, different orientations)
- Little good experimental information on negative case until last year (CERN H4)
- Little theoretical information
- **Again for Tevatron**

  negative channeling dechanneling length is longer

Physics of negative channeling

- Schiott simulated 12 GeV Aarhus/CERN data using BINCOL (Carrigan and Ellison, *Relativistic Channeling*, NATO 165, Plenum (87)). Saw only small effects on order of critical angle.
- Backe model for electrons using diffusion model – Fokker-Planck via Mathematica (Backe, et al., NIM **B266**, 3835 (2008))
- Carrigan ansatz (Fermilab – conf-09-618-AD in press)
- Must worry about negative bending dechanneling

Functional form of planar dechanneling

$$\lambda_D = 1.62 \frac{\psi_{cp}^2}{\left\langle \Theta^2 \right\rangle_c}$$

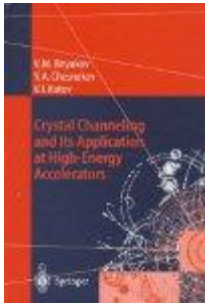

Biryukov
Chesnokov
Kotov

where

ψ_{cp} is planar critical angle

$\langle\theta^2\rangle_c$ is the mean square mult scat angle in channel

(see Feldman & Appleton, PRB8, 935 (1973), Carrigan FN-454, Biryukov, Chesnokov, and Kotov (BCK))

For (+) BCK treatment (1.50) leads to:

$$\lambda_D = \frac{256}{9\pi^2} \frac{pv}{\ln(2m_e c^2 \gamma / I) - 1} \frac{a_{TF} d_p}{Z_i r_e m_e c^2}$$

λ_D= 51 cm for (+) @ 1 TeV (roughly ~ E - note log term, ~20% effect)

Potentials for + and – particles to get ψ_p

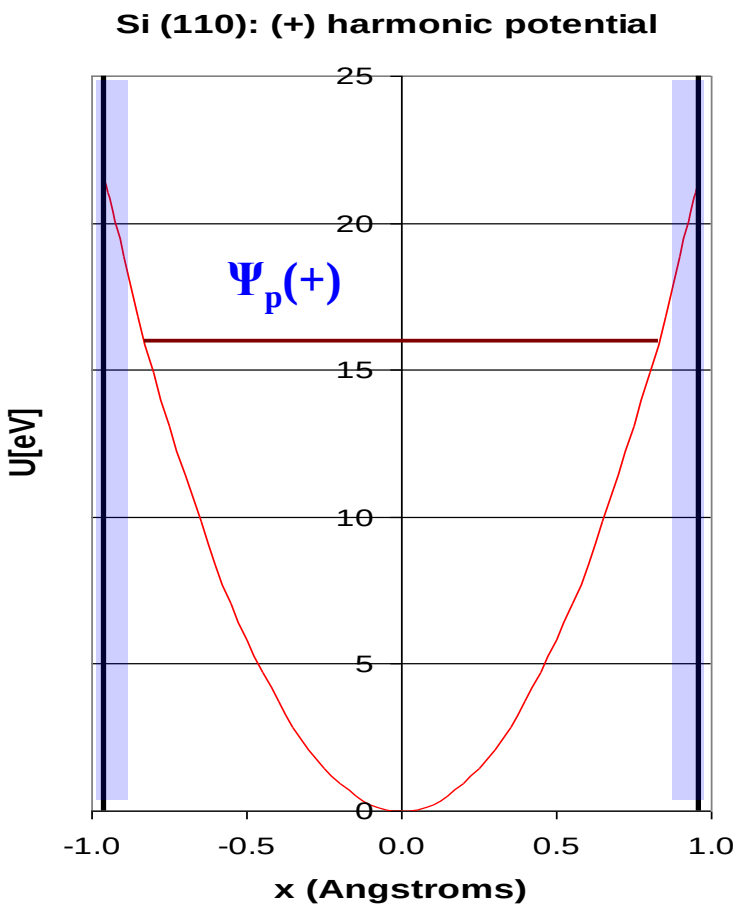

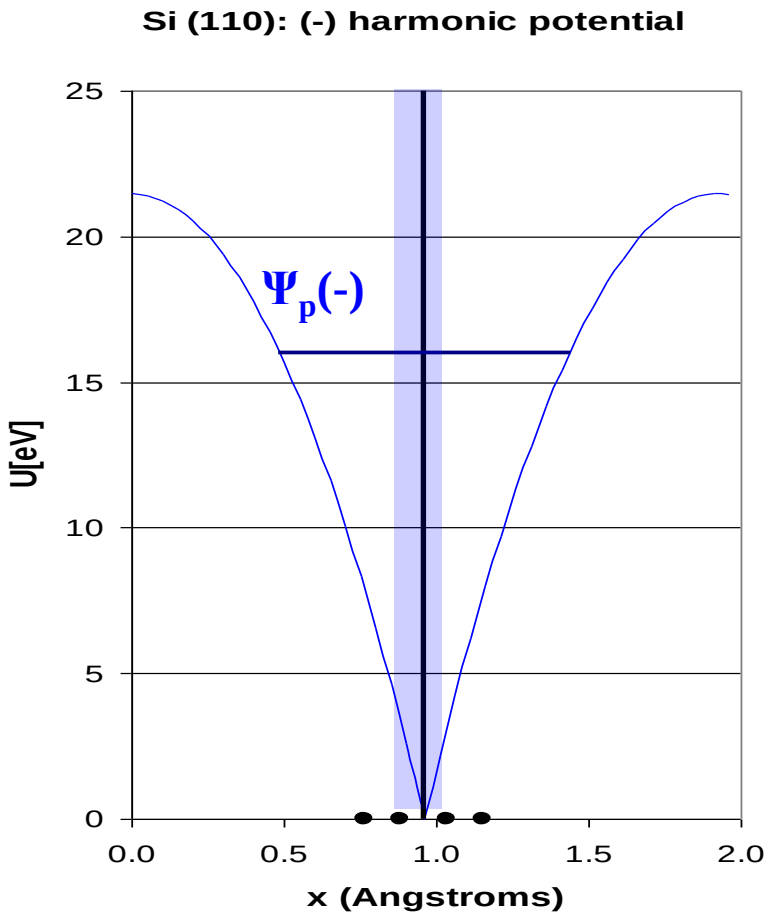

[see, e. g., Taratin and Vorobiev, Phys. Lett A119, 425 (1987)]

Negative hadronic channeling

Then for

$$\lambda_D = 1.62 \frac{\psi_{cp}^2}{\left\langle \Theta^2 \right\rangle_c}$$

Where $\langle\Theta^2\rangle_c$ follows from

$$\frac{\left.\frac{d^2\Omega}{dx}\right|_e}{\left.\frac{d^2\Omega}{dx}\right|_n} = \frac{\left.\frac{d^2\Omega}{dx}\right|_+}{\left.\frac{d^2\Omega}{dx}\right|_-} = \frac{(m_e / 2M_i E)(4\pi e^4 / m_e v^2) NZL_e}{(M_t / M_i E)(4\pi Z^2 e^4 / M_t v^2) NL_n} = \frac{L_e}{2ZL_n}$$

where L_i are the log terms in multiple scat. Set $L_n/L_e = 2$.
Get for 1 TeV as an approximation neglecting details of nuclear density.

$$\lambda_- = \left(\frac{\psi_-}{\psi_+}\right)^2 \frac{\lambda_+}{2Z(L_n/L_e)} = \left(\frac{0.48\ A}{0.83\ A}\right)^2 \frac{51\ cm}{2*14*2} = 3\ mm$$

Localized nuclear density gives 14 mm. **need a good estimate**

Negative planar dechanneling at CERN H4,

Scandale et al Phys. Let B 681 (2009) 233–236 (October)

Secret is short crystals

Planar Channeling

- Quasi-mosaic crystal using {111} plane (PNPI)
- Strip crystal using {110} plane (INFN)

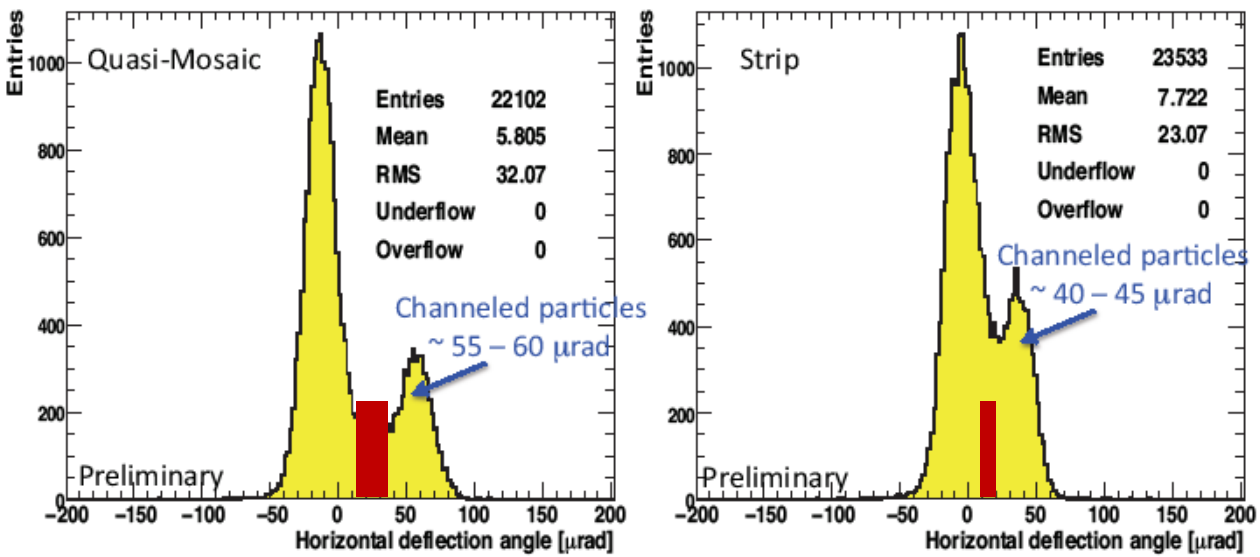

Red is dechanneling region

From Satomi Shiraishi

Crystal Collimation Workshop October '08 11

Simple λd fit

-150 GeV(1/e)

$\lambda_d(111) = 2.2$ mm

$\lambda_d(110) = 2.8$ mm

980 GeV(1/e)

$\lambda_d(111) = 14$ mm

$\lambda_d(110) = 18$ mm

Proton case @ 1 TeV (Scandale)

$\lambda_d(1100) = 500$ mm

(this is the challenge)

Working with antiprotons

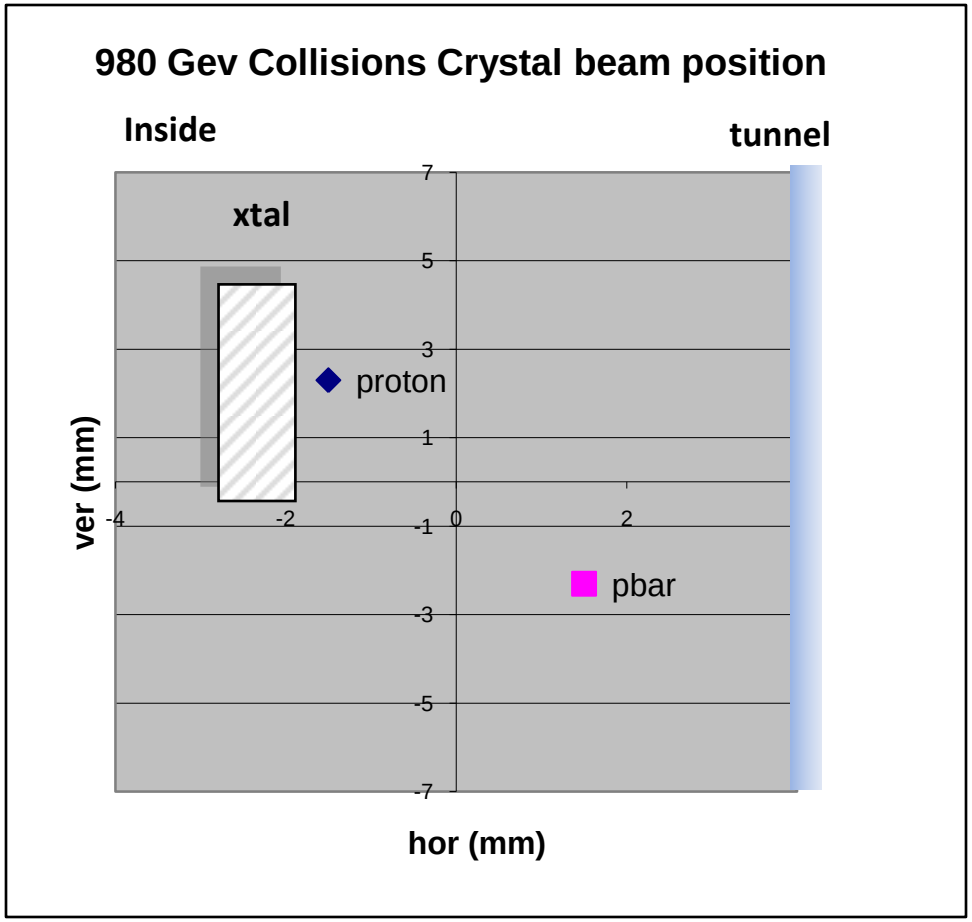

- Accelerate only pbars
- Use 2nd goniometer from below or pbar side
- Local bump at E0
- Shave out protons

New IHEP goniometer

Linear step – 0.1 micron,
angular step 0.2 microrad

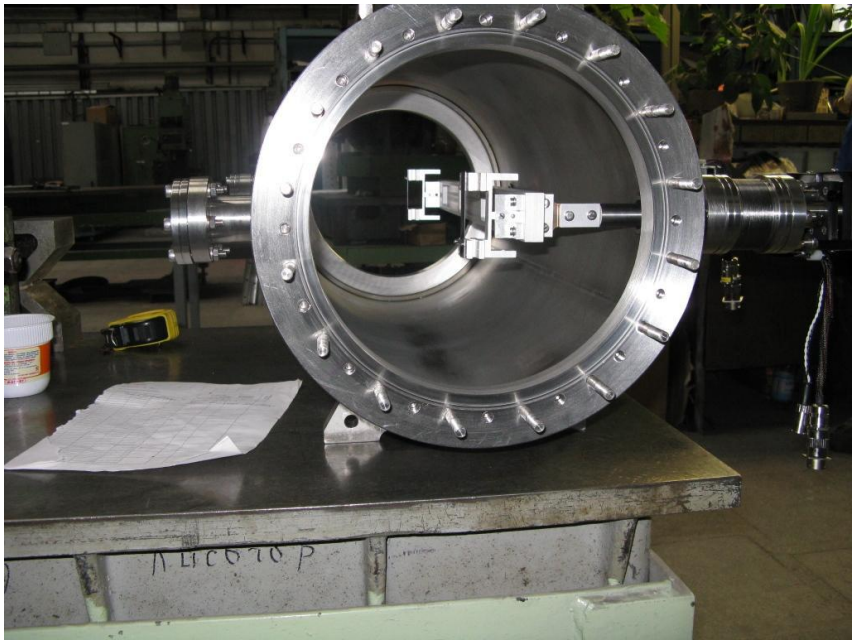

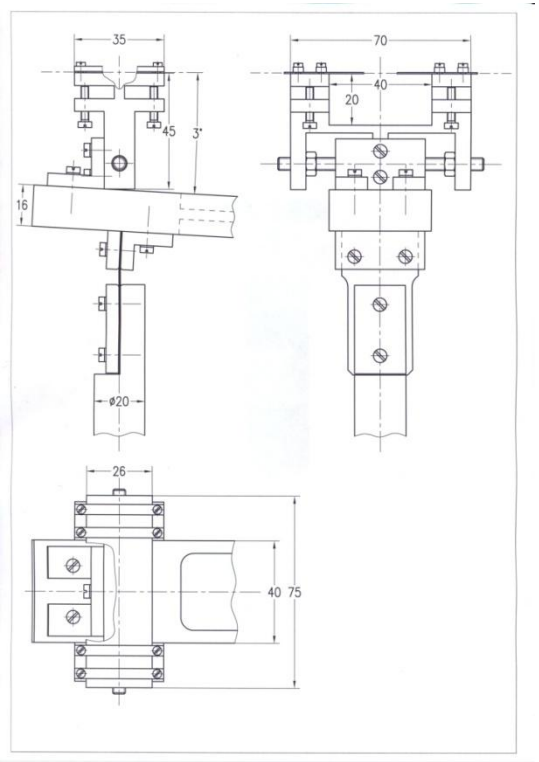

Main purpose – vertical deflection
Can rotate 90 degrees
Miscut situation

E0 layout

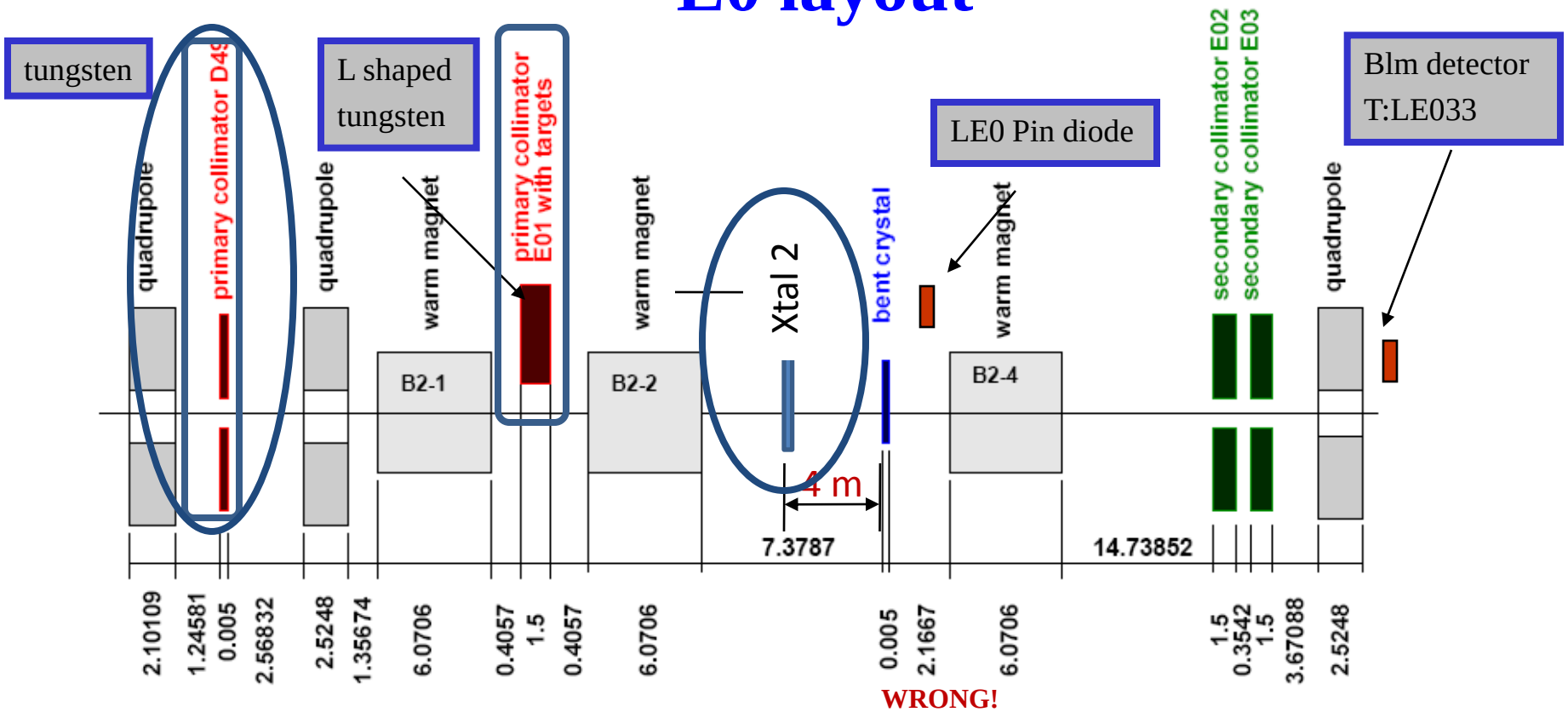

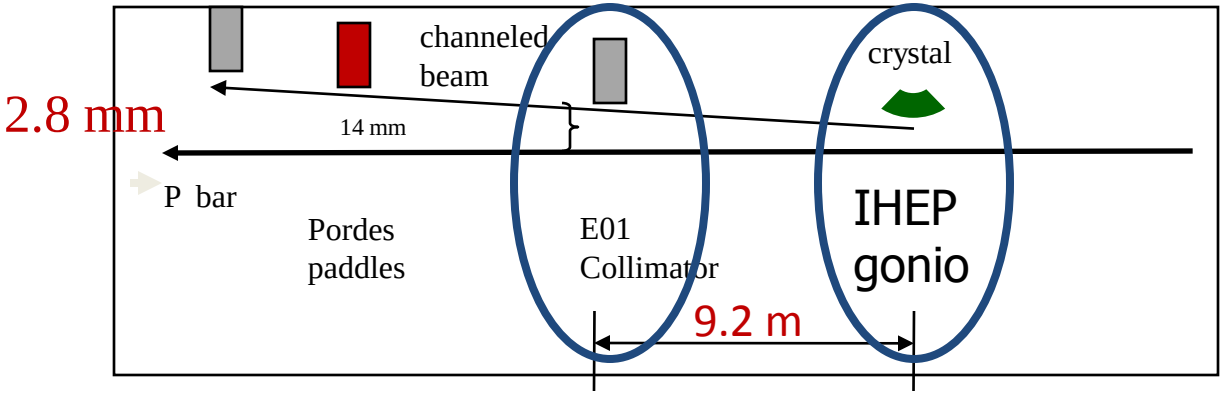

300 µrad nom

Problems:

- **small deflection**
- **W lip on E0 col**
- **detectors**

E0 layout – A. Drozhdin

Collimator scans for different crystal angles
Mokhov-Still

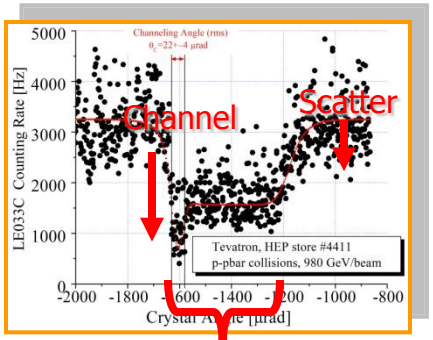

- Channeled beam produces a shoulder 7 + 0.8 mm from the core
- The channeled beam should have been ~10.5 mm from the core.
- First data set suggested the channeled beam was hitting an aperture.
- But on 1/10/2006, after moving the crystal 10mm, new data proved there was no aperture limit. **Measured deflection ~ 325 μrad, not 440 μrad**.

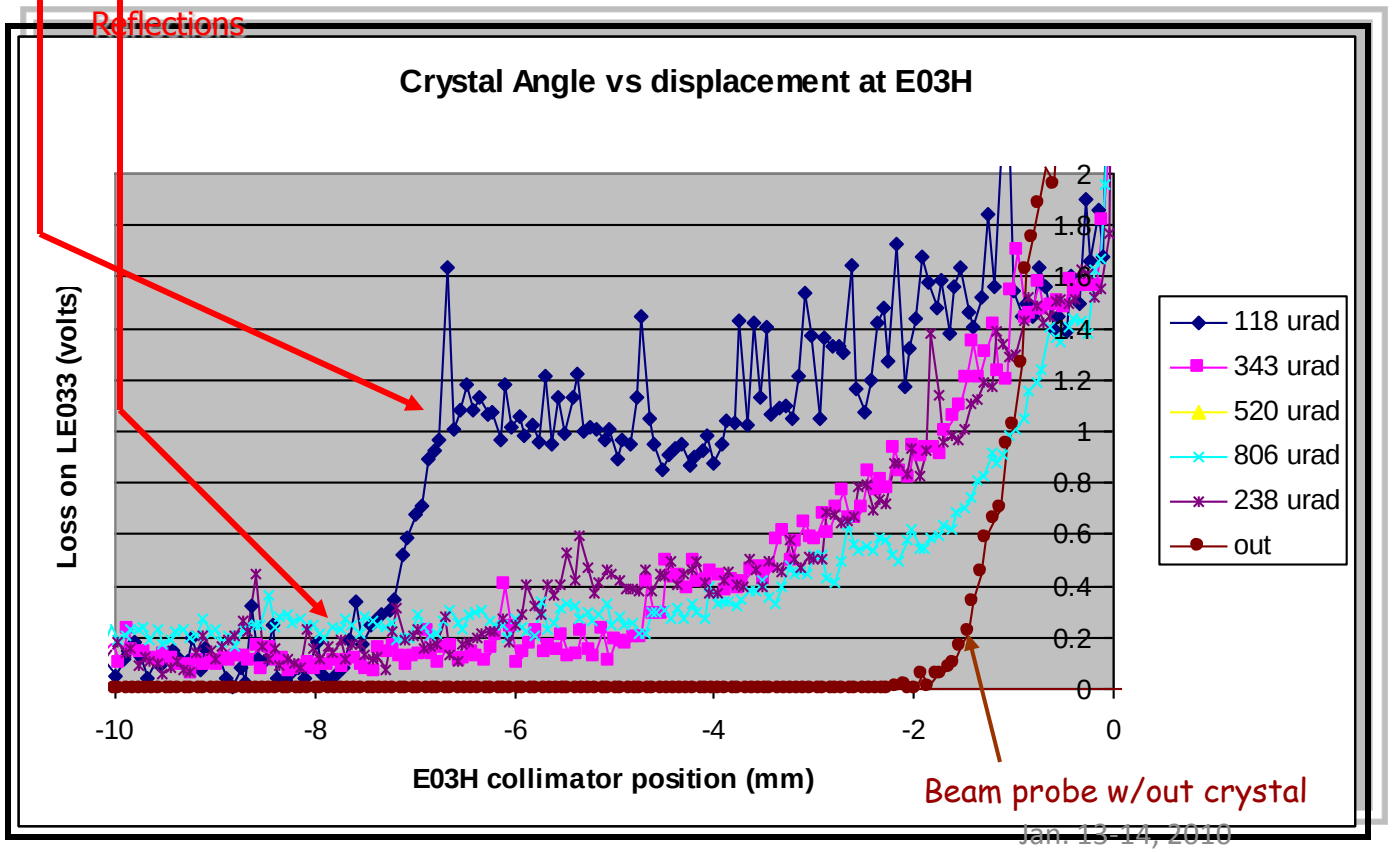

What is a measurement?
E03 data fitted and differentiated

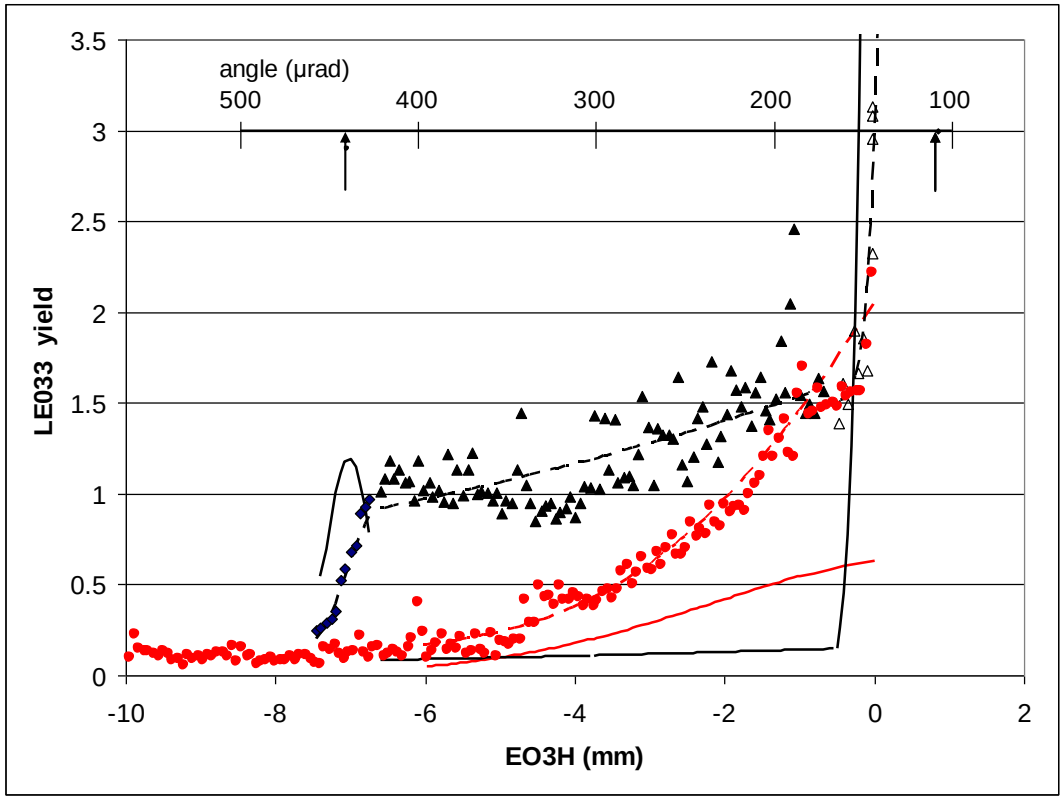

Channeling peak is > 50% of deflected beam. Remainder dechanneling? Sigma is twice critical angle, some due to beam divergence.

An experiment

- Planar dechanneling length
  - Also reanalyze positive data
- Negative planar volume reflection?
- Axial case?

Do we need a new crystal or so?

If so, should characterize them

Going forward

- Positive dechanneling from existing data
- Simulation, diffusion model for negative
- New crystals? (short, good deflection, …)
- Study paper?
- Proposal?