MicroBooNE Experiment

Gina Rameika
Fermilab

DOE Annual Science & Review
July 12-14, 2010

U.S. DEPARTMENT OF ENERGY

Fermilab

Introduction

- MicroBooNE is –
  - A liquid argon Time Projection Chamber (LAr-TPC), situated on the Booster Neutrino Beam.
  - It combines physics and hardware development goals, using both to demonstrate the technology as an option for massive neutrino detectors.
  - The detector design, fabrication and installation is managed as a DOE Project, with financial contributions from NSF
    - Total DOE project cost (TPC) is set to be under $20M

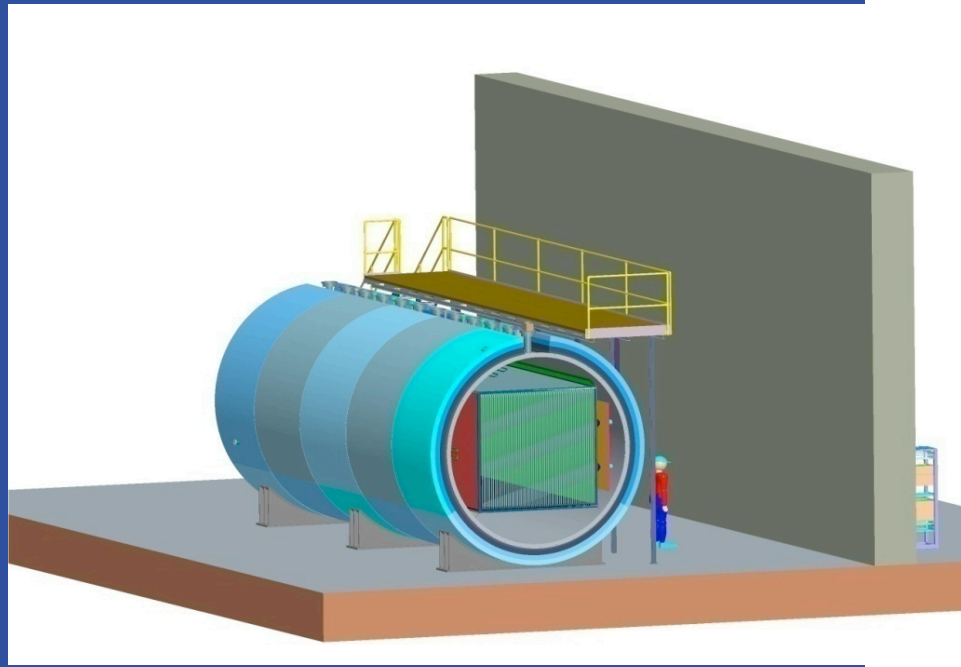

MicroBooNE Collaboration

13 institutions
58 collaborators
NSF funded/DOE funded

- *Brookhaven Lab*: H. Chen, J. Farrell, F. Lanni, D. Lissauer, D. Makowiecji, J. Mead, V. Radeka, S. Rescia, J. Sondericker, C. Thorn, B. Yu
- *Columbia University*: L. Camilleri, C. Mariani, M. Shaevitz, B. Willis**
- *FermiLab*: B. Baller, C. James, S. Pordes, G. Rameika, B. Rebel, D. Schmitz, J. Wu
- *Kansas State University*: T. Bolton, G. Horton-Smith, D. McKee
- *Los Alamos Lab*: G. Garvey, J. Gonzales, B. Louis, C. Mauger, G. Mills, Z. Pavlovic, R. Van de Water, H. White, S. Zeller
- *Massachusetts Institute of Technology*: W. Barletta, L. Bugel, J. Conrad, C. Ignarra, B. Jones, G. Karagiorgi, T. Katori, H. Tanaka
- *Michigan State University*: C. Bromberg, D. Edmunds
- *Princeton University*: K. McDonald, C. Lu, Q. He
- *St. Marys*: P. Nienaber
- *University of California, Los Angelas*: H. Wang
- *University of Cincinnati*: R. Johnson, A. Wickremasinghe
- *University of Texas at Austin*: S. Kopp, K. Lang
- *Yale University*: C. Anderson, B. T. Fleming*, S. Linden, K. Partyka, M. Soderberg, J. Spitz

*=Spokesperson, **=Deputy Spokesperson

Why LAr-TPC

- An attractive detector technology for neutrino physics
  - Fine-grained tracking, and energy deposition information

LAr-TPC detectors produce bubble-chamber like visualization of events

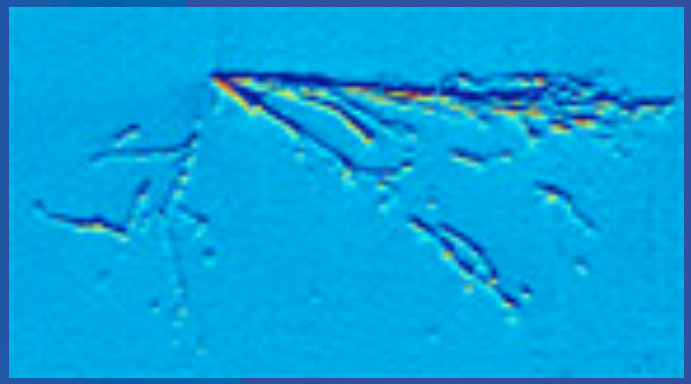

ArgoNeuT anti-neutrino event, 2010

One can have particle ID capability, from dE/dx along a track

In particular, electron-gamma separation

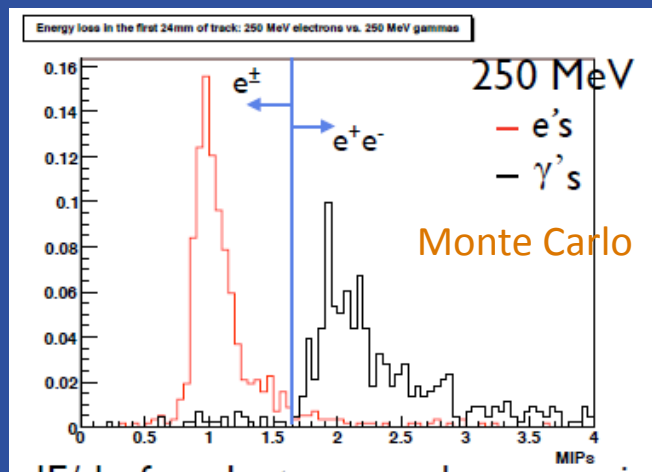

dE/dx for electrons and gammas in first 2.4 cm of track

- Detectors for neutrino appearance experiments need good e-g separation, to identify CC n_e signal events from NC background events

LAr – Water Cherenkov comparison

- Neutrino Oscillation Sensitivities
  - Factor of ~6 in Mass (100kT WC ~ 17kT LAr)

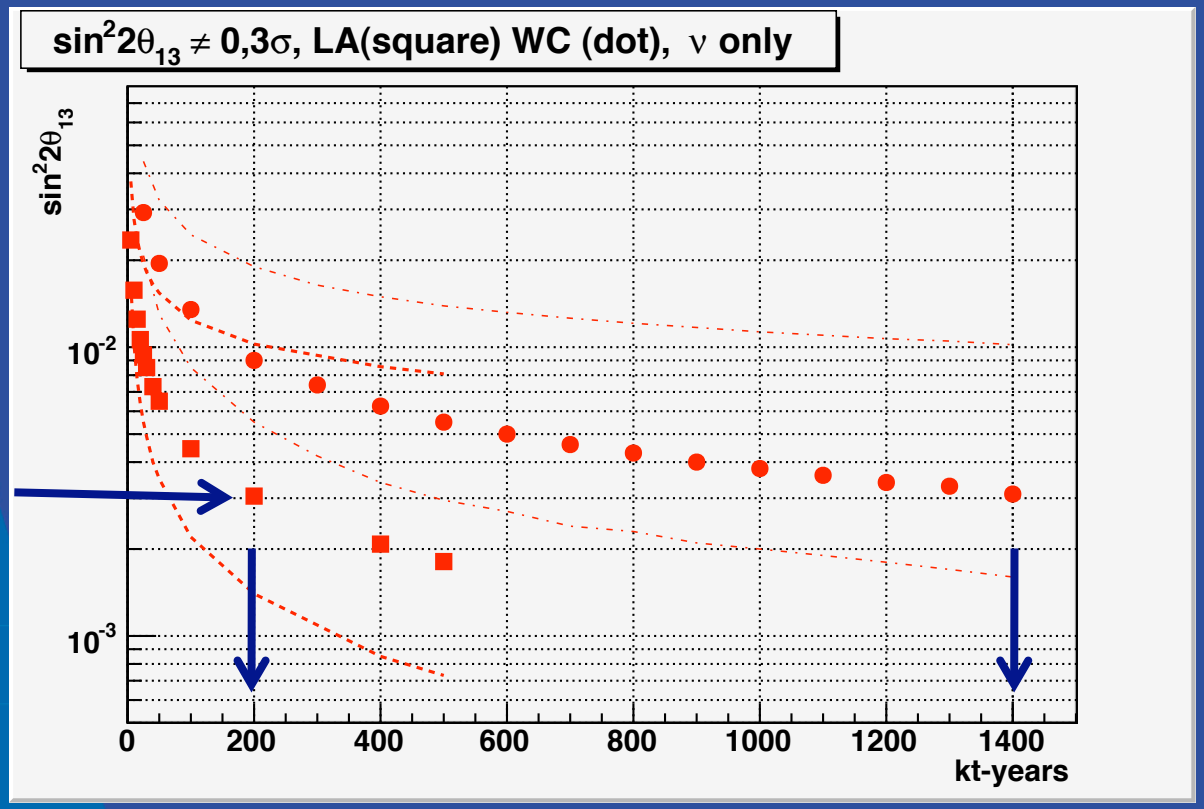

LAr-TPC Development Program at FNAL

- In principle, these detectors are scalable to large sizes
  - Future neutrino experiments will require massive detectors

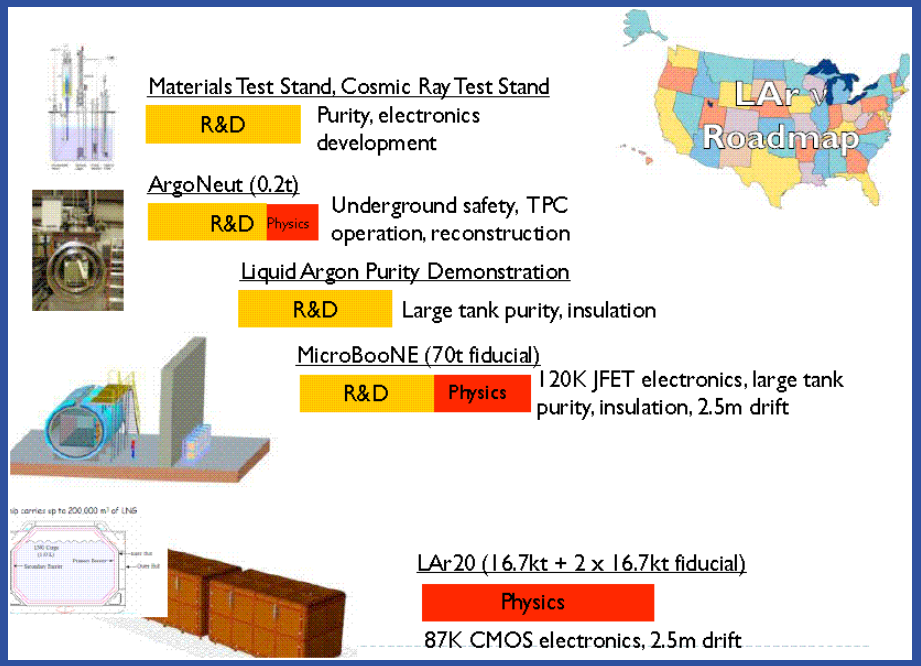

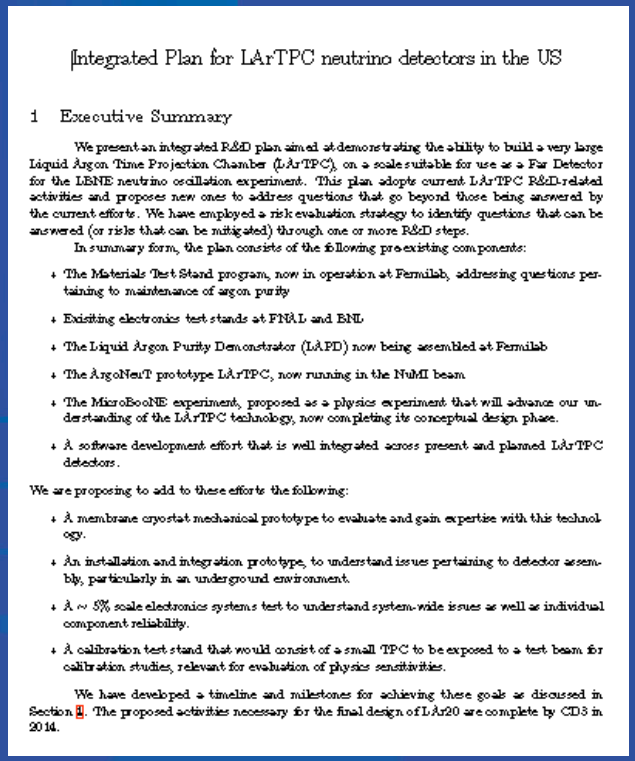

Integrated Plan for LArTPC neutrino detectors in the US

1 Executive Summary

We present an integrated R&D plan aimed at demonstrating the ability to build a very large Liquid Argon Time Projection Chamber (LArTPC), on a scale suitable for use as a Far Detector for the LBNE neutrino oscillation experiment. This plan adopts current LArTPC R&D-related activities and proposes new ones to address questions that go beyond those being answered by the current efforts. We have employed a risk evaluation strategy to identify questions that can be answered (or risks that can be mitigated) through one or more R&D steps.

In summary form, the plan consists of the following pre-existing components:

- The Materials Test Stand program, now in operation at Fermilab, addressing questions pertaining to maintenance of argon purity
- Exisiting electronics test stands at FNAL and BNL
- The Liquid Argon Purity Demonstrator (LAPD) now being assembled at Fermilab
- The ArgoNeuT prototype LArTPC, now running in the NuMI beam
- The MicroBooNE experiment, proposed as a physics experiment that will advance our understanding of the LArTPC technology, now completing its conceptual design phase.
- A software development effort that is well integrated across present and planned LArTPC detectors.

We are proposing to add to these efforts the following:

- A membrane cryostat mechanical prototype to evaluate and gain expertise with this technology.
- An installation and integration prototype, to understand issues pertaining to detector assembly, particularly in an underground environment.
- A ~ 5% scale electronics systems test to understand system-wide issues as well as individual component reliability.
- A calibration test stand that would consist of a small TPC to be exposed to a test beam for calibration studies, relevant for evaluation of physics sensitivities.

We have developed a timeline and milestones for achieving these goals as discussed in Section 4. The proposed activities necessary for the final design of LAr20 are complete by CD3 in 2014.

- "Integrated Plan for LAr-TPC neutrino detectors in the U.S." submitted to DOE in December
  - Produced by a committee of enthusiasts from the Lab and University community
- The MicroBooNE detector is a part of this plan

MicroBooNE Physics Goals

- MiniBooNE low energy neutrino excess
- Suite of low energy cross section measurements
- Oscillation search

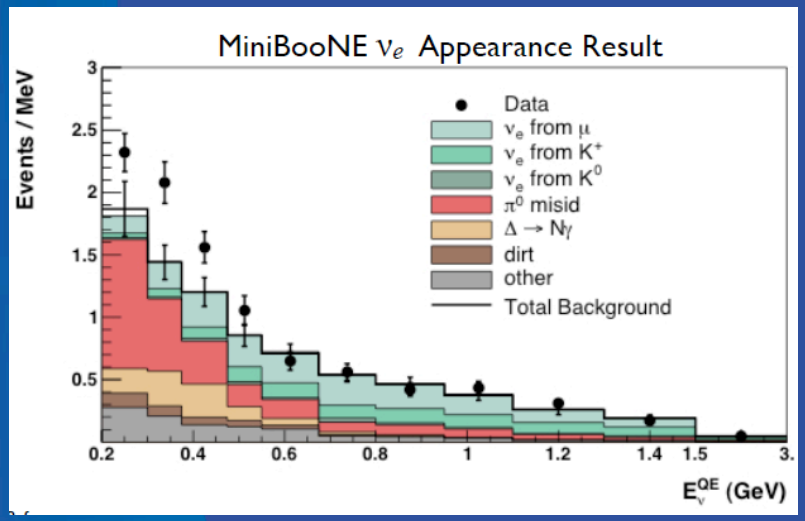

MiniBooNE Neutrino-Mode Excess

200-300MeV: 45.2±26.0 events

300-475MeV: 83.7±24.5 events

MicroBooNE will have >5σ significance for electron-like excess, >3.3σ for photon-like excess.

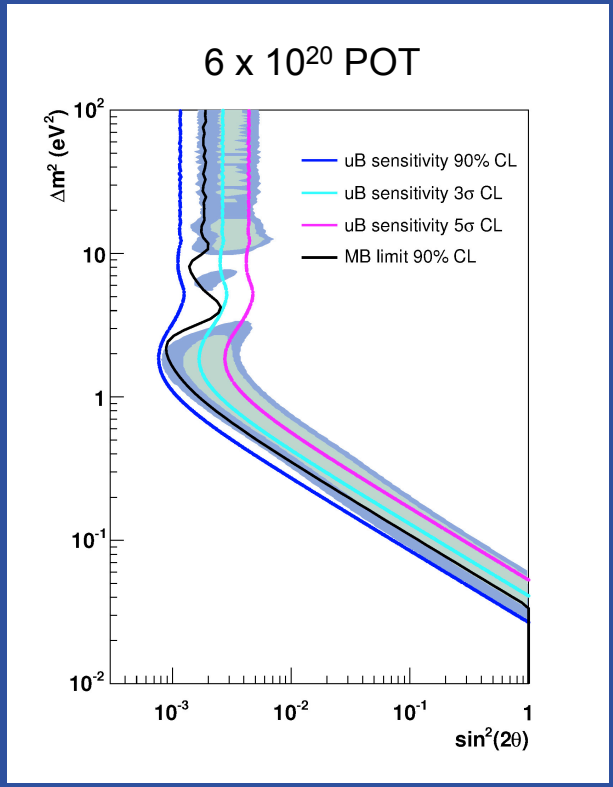

MicroBooNE Detector Development Goals

- Develop tools for analysis
  - Demonstrate photon – electron identification (reconstruction)
  - Refine sensitivity estimates for next generation detectors (analysis)
  - Demonstrate ability to run at shallow depth
- Purity: Test of GAr purge in large, fully instrumented vessel
- Implementation of cold electronics in Gaseous Argon (GAr)
- Collect scaling data for larger detectors (construction costs, operations, etc.)

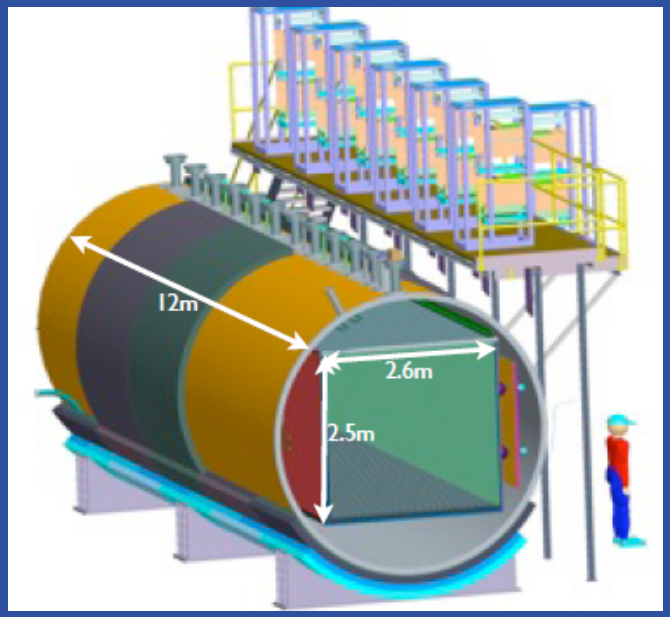

Development Goals: Challenges

- Argon purity – parts per trillion
  - High purity necessary for long drifts
- Electronics
  - Signals are small, so sources of electronic noise must be strictly controlled
  - Wide range of pulse sizes and shapes
  - High sampling rate + many wires = large amount of raw data
- Vacuum & cryogenics environments take special care
  - Every penetration into the cryostat must be leak-tight
  - Every penetration increases the heat load on the system
- Safety issues
  - ODH hazards
  - Pressure vessel – (MicroBooNE is evacuable)

Project Status

- Experiment given Stage 1 approval in July 2008
- Project timeline
  - CD-0 in September 2009
  - Initial Director's Review in November 2009
  - DOE CD-1 Review in March 2010
  - **ESAAB/CD-1 approval : July 9, 2010**
  - Baseline Review, CD-2, by early 2011
    - Currently performing internal reviews, assessing costs and schedule
  - Construction 2011-2012
  - Installed and running in 2013 – transition to operations
- Collaboration and Project closely linked
  - Collaborators hold management roles
  - Complete participation in the design
  - NSF-funded contributions to the detector

Detector Overview

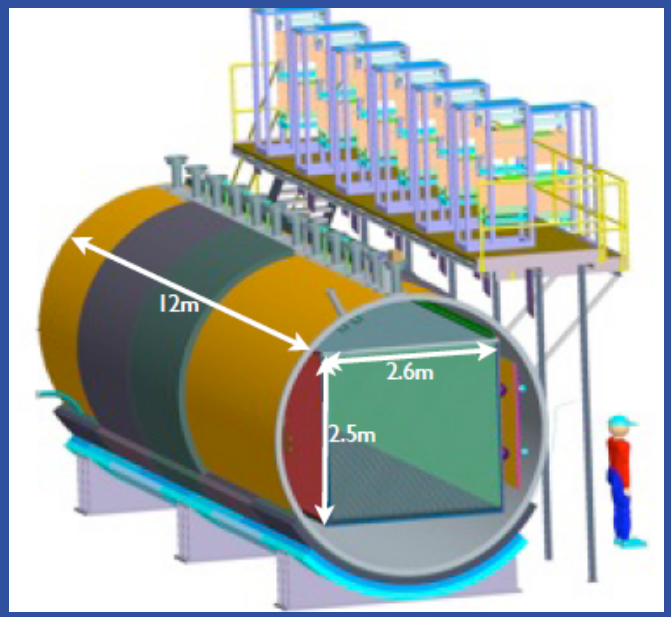

- Single-walled insulated cylindrical vessel ~10 m long, ~3.5m diameter
- Holds ~150 tons of liquid argon
- ~70 ton fiducial volume, inside the TPC
- 2.6m drift (500 V/cm E-field =1.6 ms drift time
- 3 readout planes (+/-30 degrees, vertical)
- ~8000 channels
- pre-amplifiers, sitting in cold argon gas, above TPC; digitizing electronics located outside the vessel
- ~30 PMTs for trigger
- Cryogenic system for purification and recirculation

The WBS Dictionary describes the scope of each

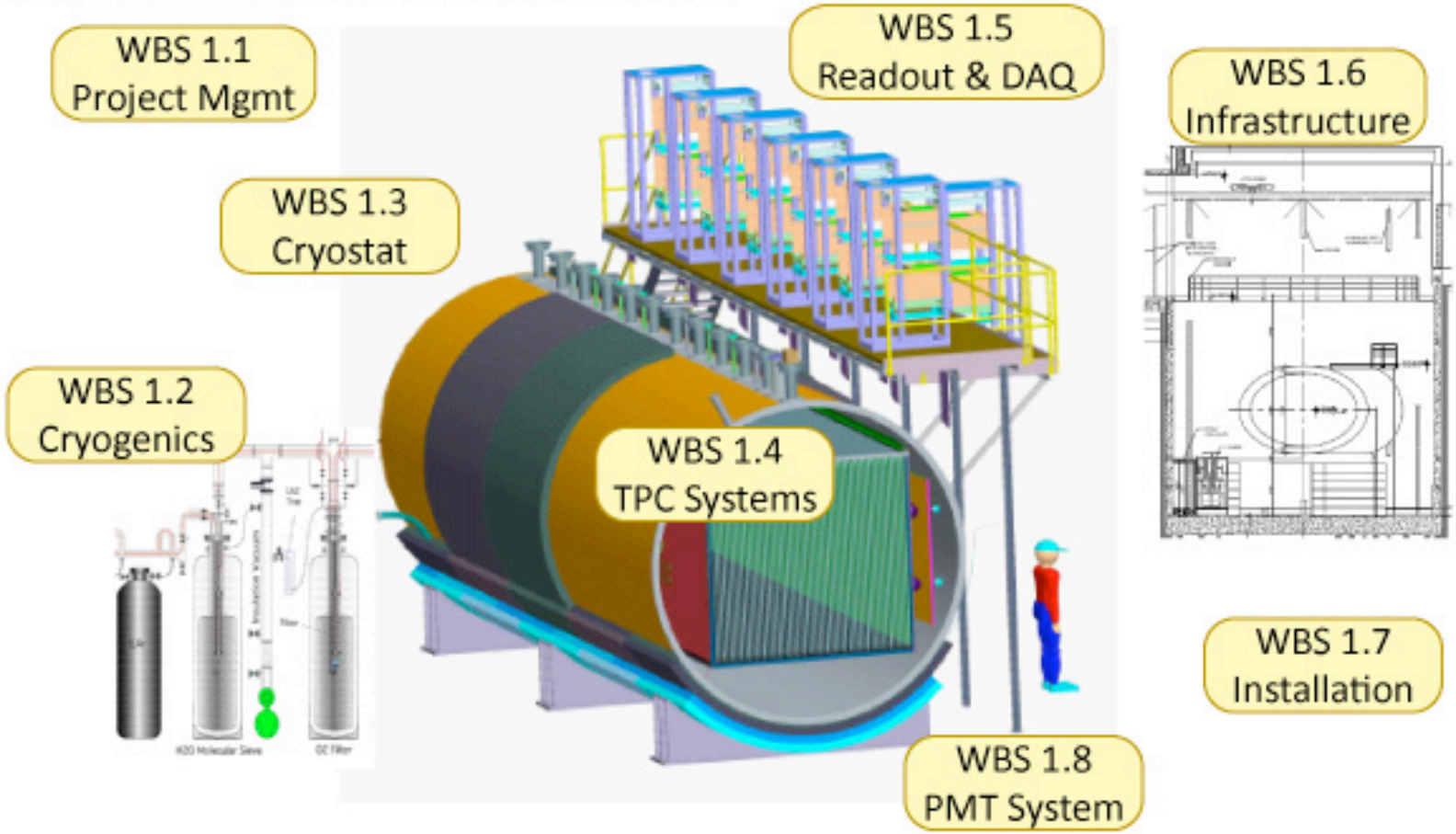

Project Work Breakdown Structure

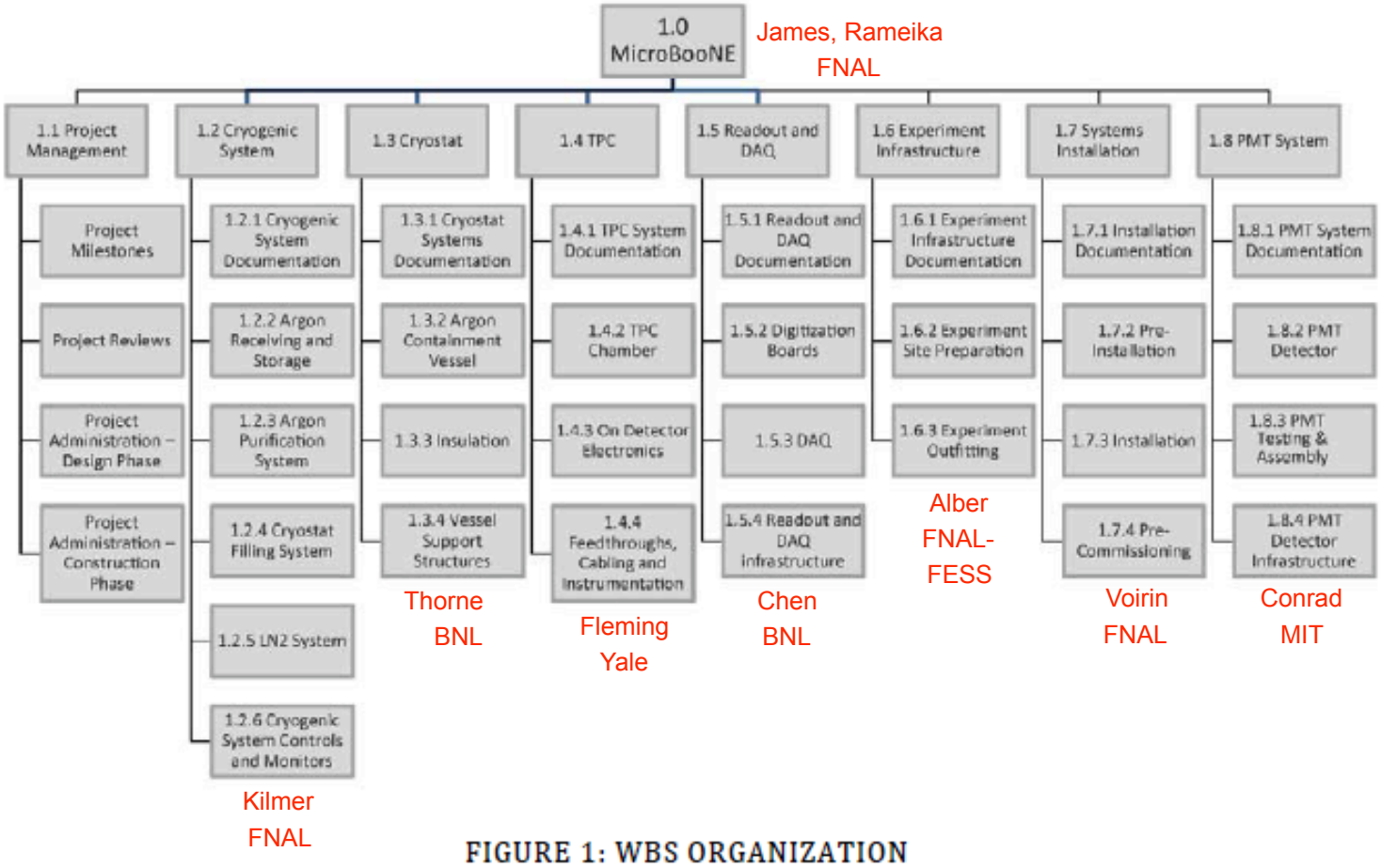

FIGURE 1: WBS ORGANIZATION

Reworking the WBS to incorporate more Project Management and Integration Tasks

Project Work Breakdown Structure

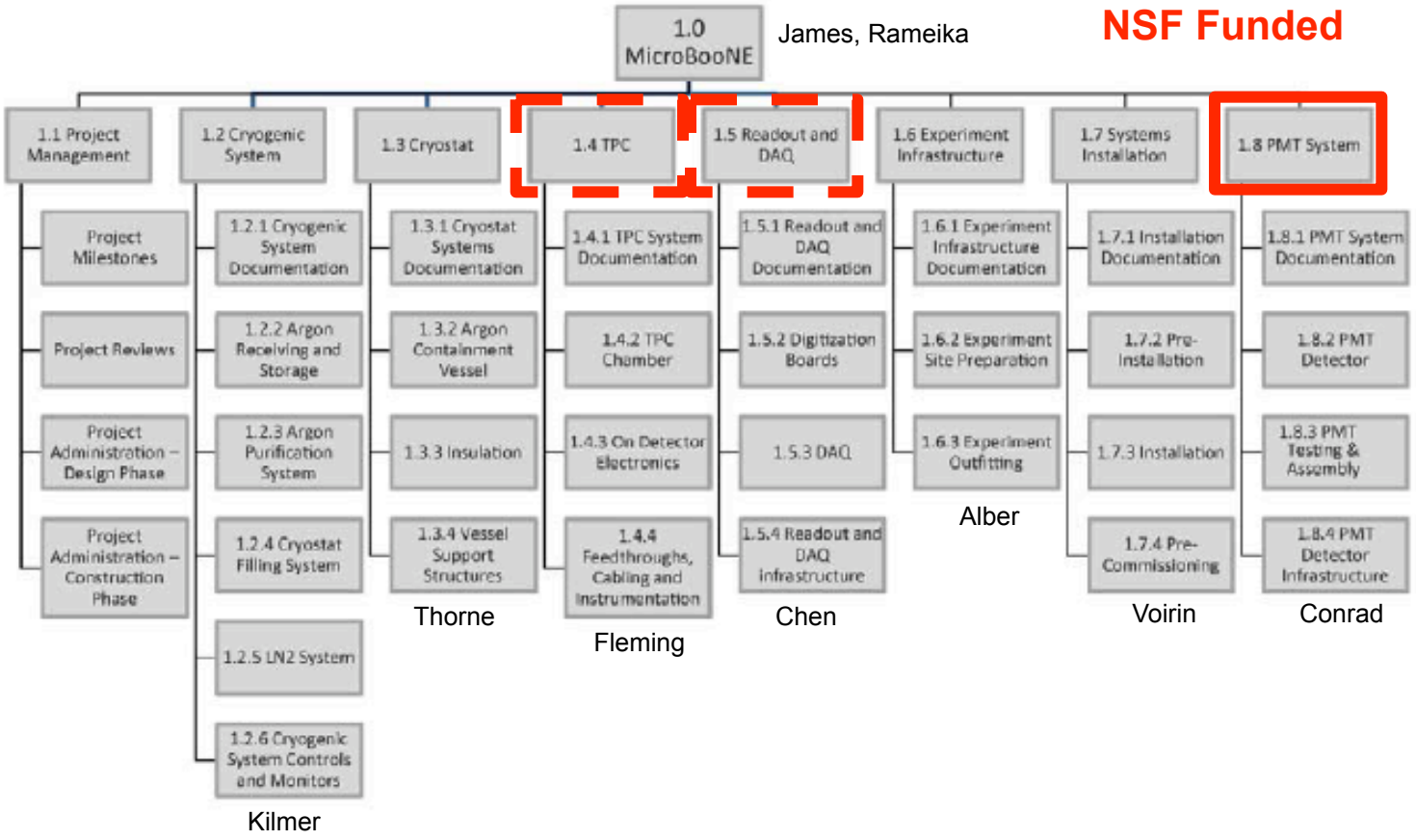

FIGURE 1: WBS ORGANIZATION

Reworking the WBS to incorporate more Project Management and Integration Tasks

Current Work

- Cryogenics and Vessel
  - System layout design
  - Purification filter tank assemblies
  - Pump assemblies
  - Integrated Vessel design

  - R&D at FNAL (PAB Lab) has produced a good understanding of how impurities get introduced and operating methods to filter them out

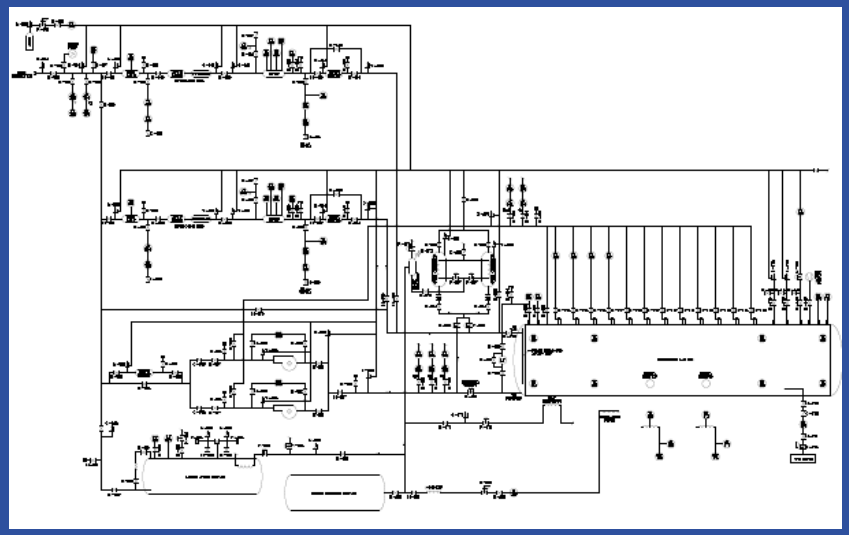

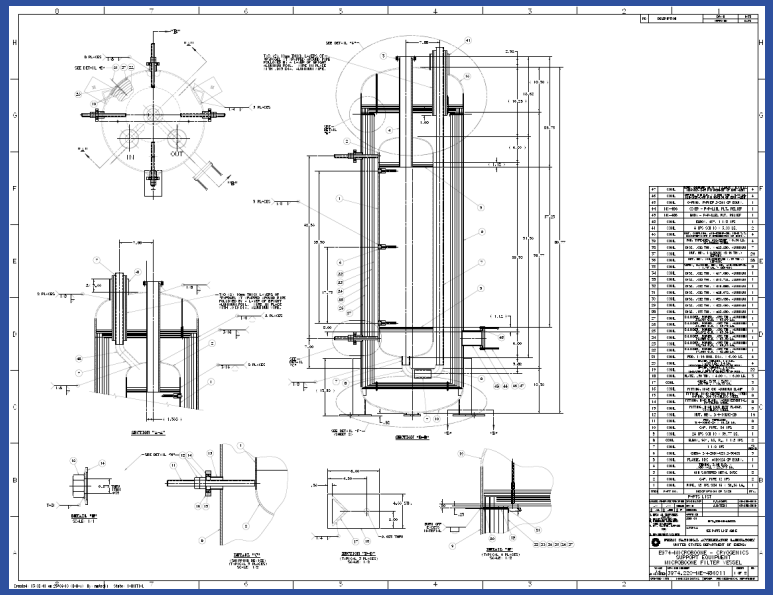

Current Work

- Wire Chamber
  - Detailed design of the wire planes
  - FEA analysis of mechanical structures
  - Development of wire winding machine

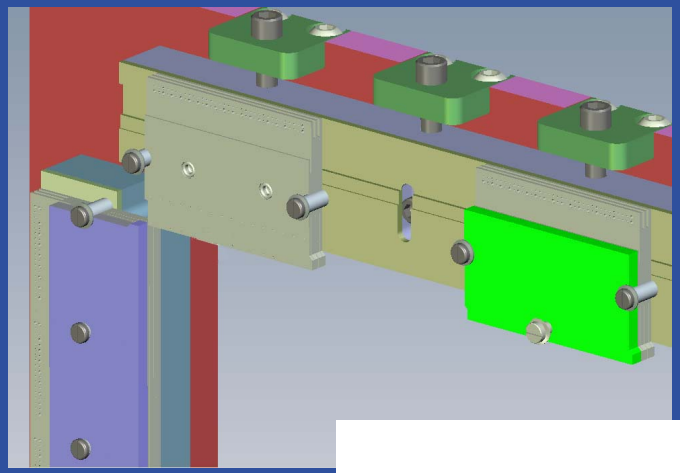

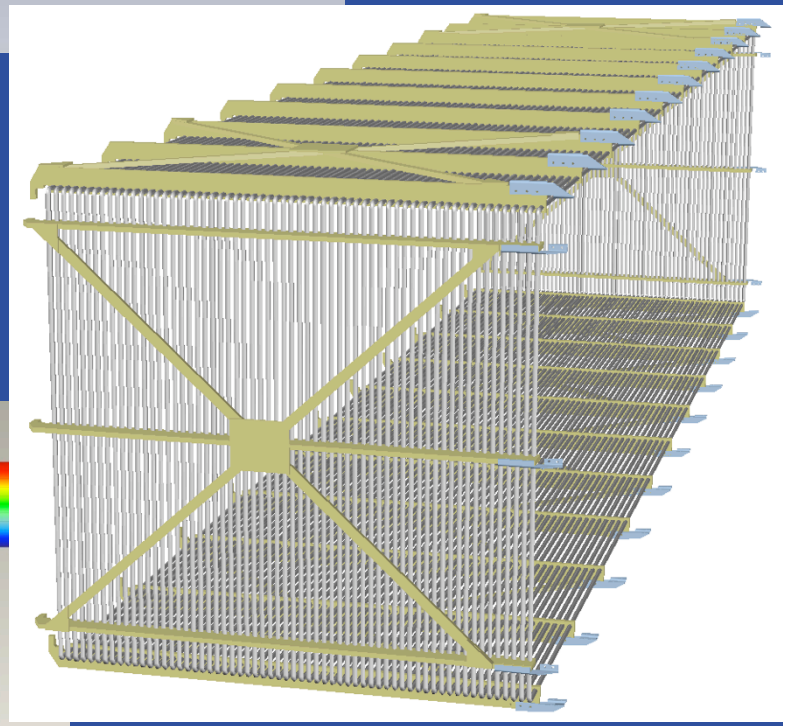

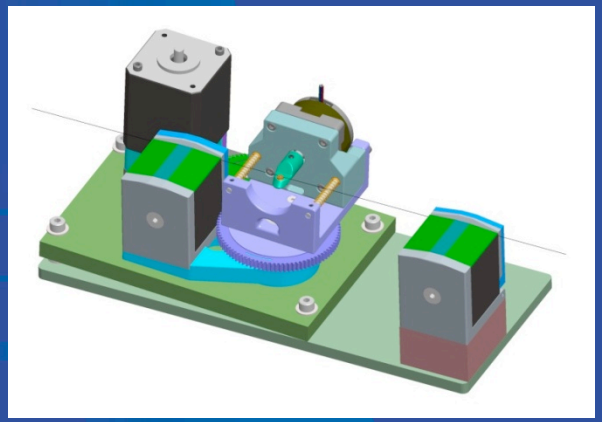

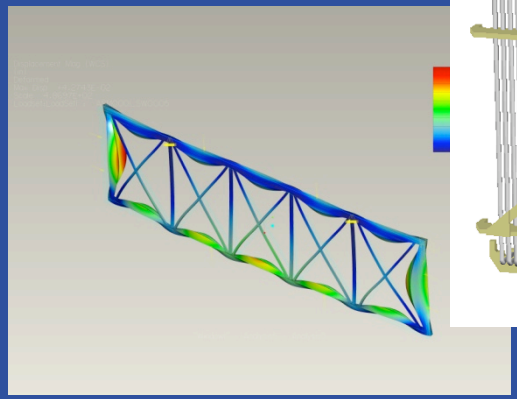

Current Work

- Electronics
  - Constructing prototype boards based on the conceptual design

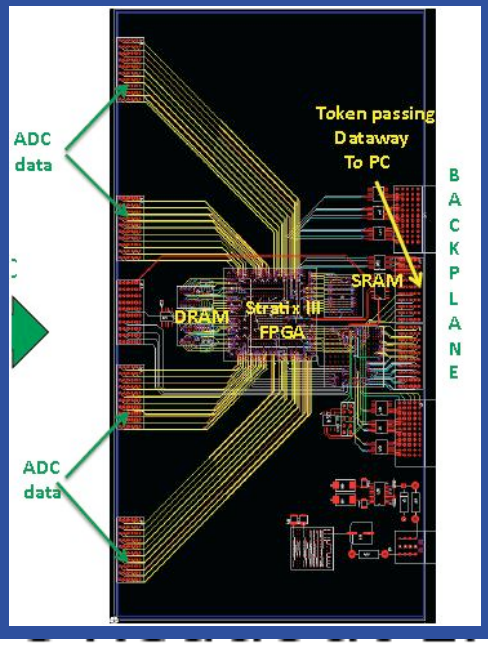

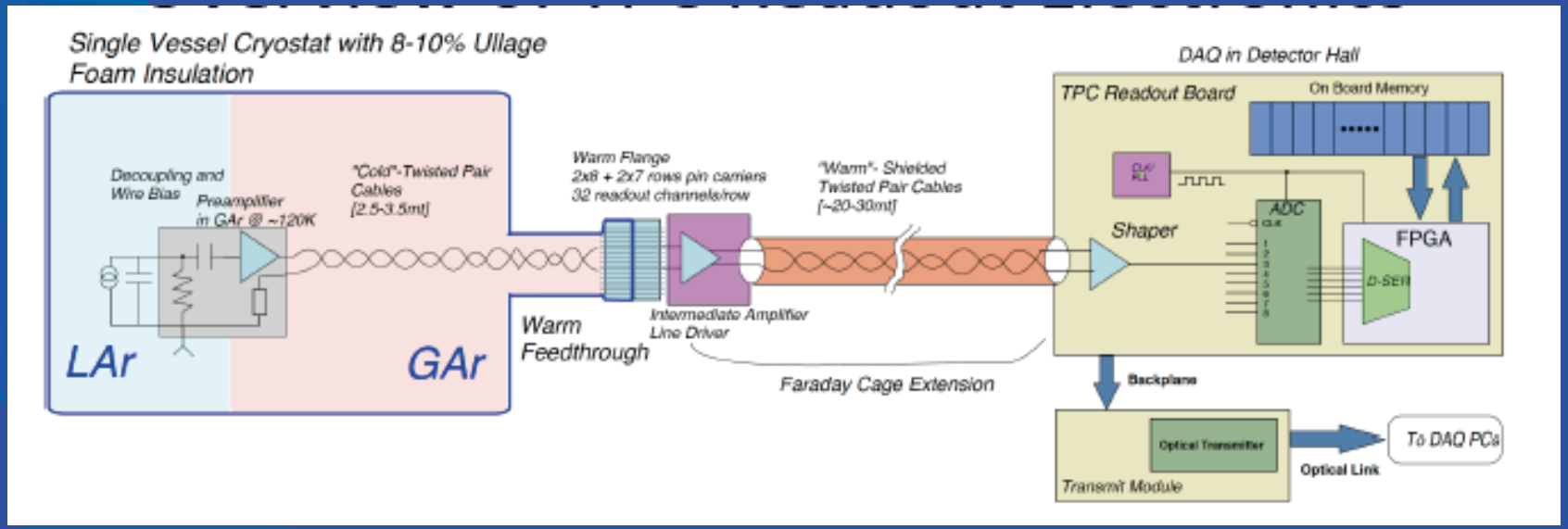

Current Work

- Infrastructure and Installation
  - The assembly of the detector elements inside the vessel will be done at the D-Zero Assembly Bldg
  - Move the assembly into the MiniBooNE enclosure, after D&D and infrastructure updates

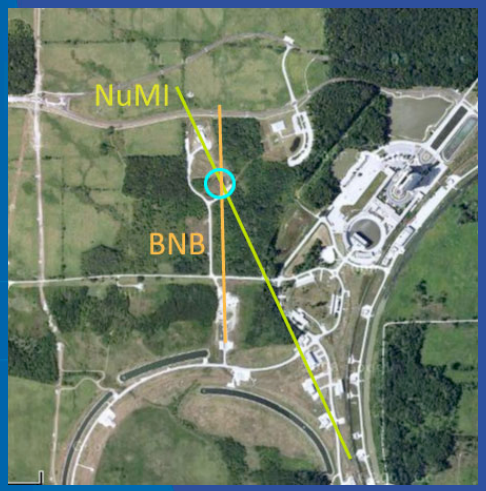

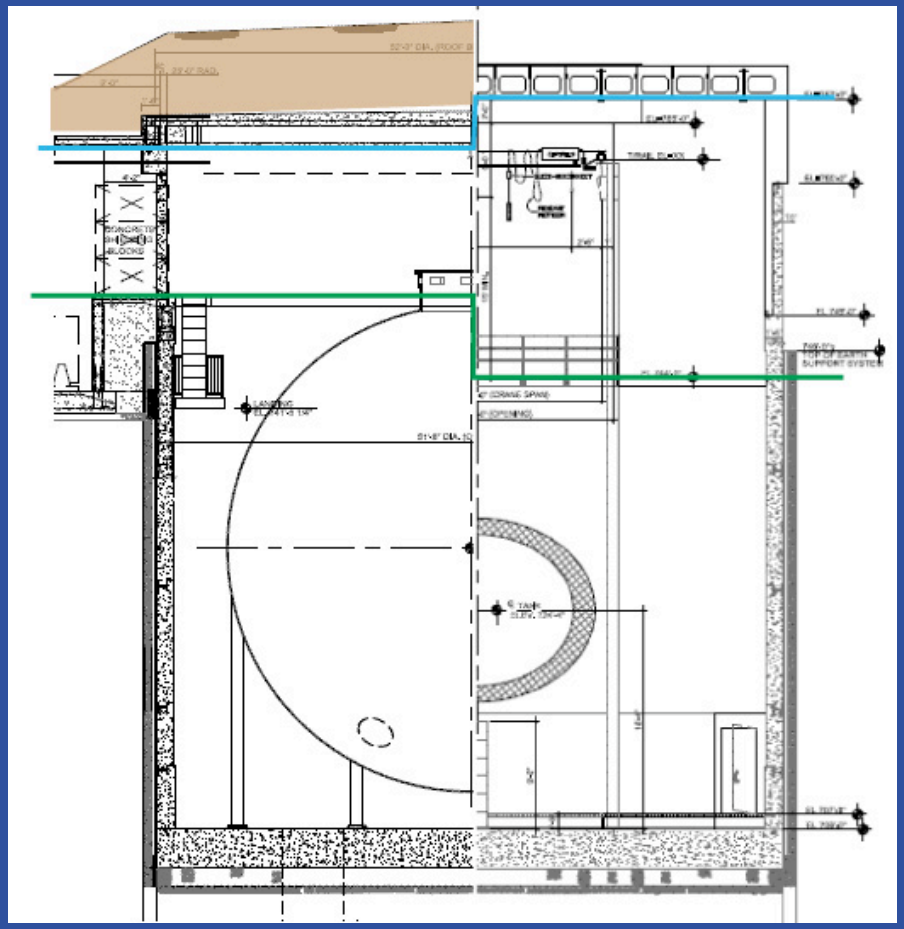

Schedule Analysis – Work in Progress

	Activity Name	Duration (Work Months)	Start Date	Finish Date	Predecessors
1	End MiniBooNE Operations	0.00	6/13/11	6/13/11	
2	MiniBooNE Operations	10.71	7/6/10	5/31/11	
3					
4	MiniBooNE Detector D&D	10.18	6/13/11	4/13/12	
5	Preparation	1.00	6/13/11	7/12/11	1
6	Oil Removal	1.00	7/13/11	8/11/11	5
7	PMT Removal	6.00	8/12/11	2/13/12	6
8	Electronics Removal	2.00	8/13/11	9/11/11	1
9	Tank Removal	1.00	2/14/12	3/14/12	7
10	Clean-up	1.00	3/15/12	4/13/12	9
11					
12	CD3 or 3a (begin construction)	0.00	3/1/11	3/1/11	
13					
14	MicroBooNE Building Preparation	4.06	3/15/12	7/16/12	
15	Remove roof				
16	MB tank removed	1.00	3/15/12	4/13/12	9
17	Prepare pit for vessel	3.00	4/16/12	[illegible]	[illegible]
18	Pit ready for vessel	0.00	7/16/12	[illegible]	11
19					
20	MicroBooNE Vessel	12.10	3/1/11	[illegible]	
21	Design				
22	Procurement	12.00	3/1/11	3/2/12	12
23	Vessel Delivery to FNAL	0.00	3/2/12	3/2/12	22
24					
25	MicroBooNE Detector Assembly	5.00	3/5/12	8/3/12	
26	Prepare vessel	1.00	3/5/12	4/3/12	23
27	Install TPC	2.00	4/4/12	6/4/12	26
28	Install PMTs	1.00	6/5/12	7/4/12	27
29	Close Vessel	1.00	7/5/12	8/3/12	28
30	Vessel ready for installation	0.00	8/3/12	8/3/12	29

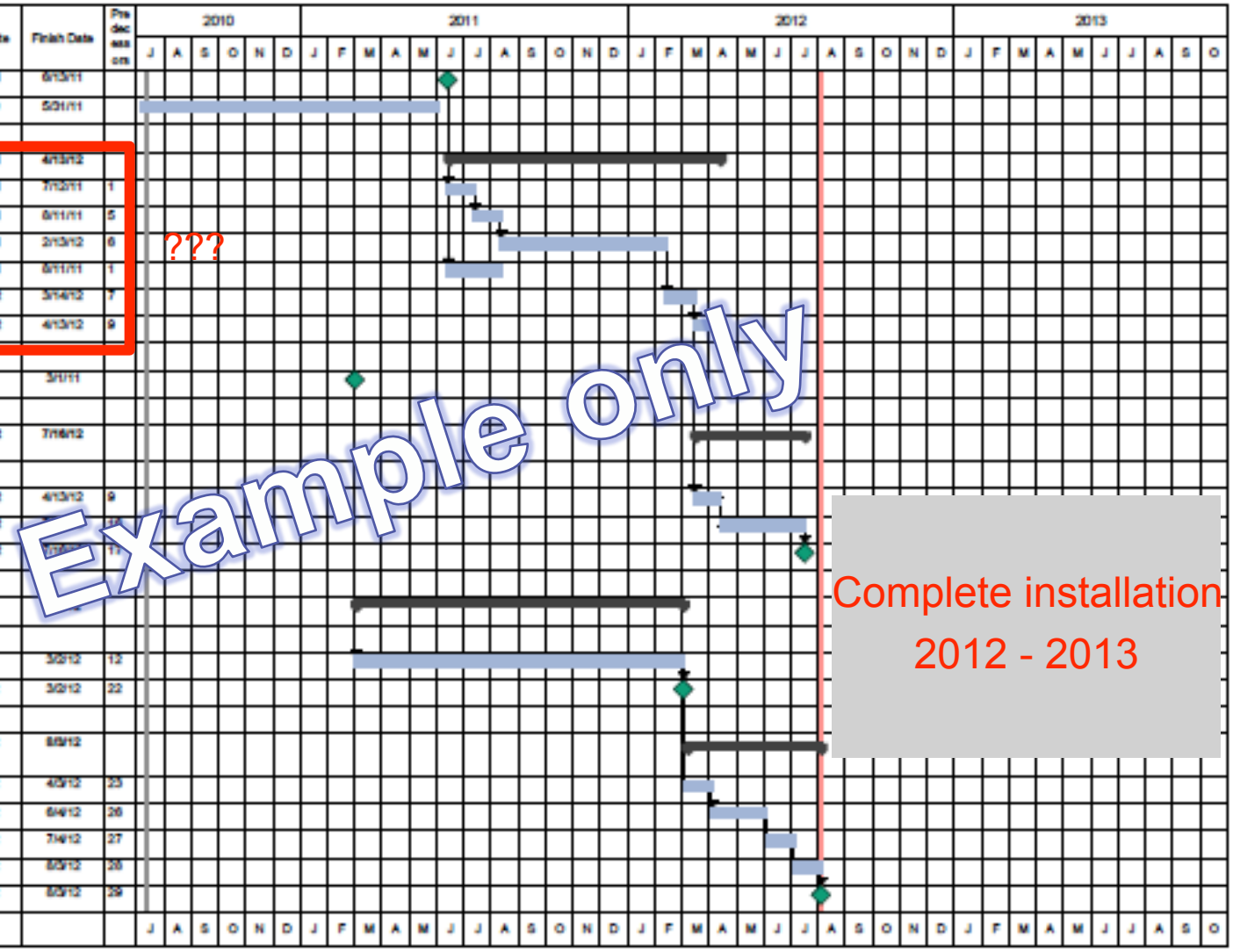

Post-Project Planning – Transition to Operations

- The Project is completed once the detector is installed and approved for operations
  - All operational clearances and safety approvals completed
- Initial filling of the vessel is a test of the ability to perform a gas purge of a large vessel, fully instrumented, with no prior evacuation, and reach a purity level needed to operate within a "reasonable time"
  - The controlled cool-down and purge process may take 3-6 weeks
- Developing estimates for annual operating costs
  - Dominated by maintenance of the cryogenic system
    - Both materials and labor costs

Post-Project Planning – Data Analysis

- LArSoft is a collaborative software development effort, involving members of the ArgoNeuT, MicroBooNE and LBNE collaborations, with Computing Division participation
  - Developing both simulation and reconstruction software packages
  - The ArgoNeut LArTPC collected NuMI neutrino beam interactions when it was operated underground in the MINOS ND Hall for a few months in 2009-2010
    - Have real data to develop reconstruction algorithms on
      - Several graduate students are on the front-lines

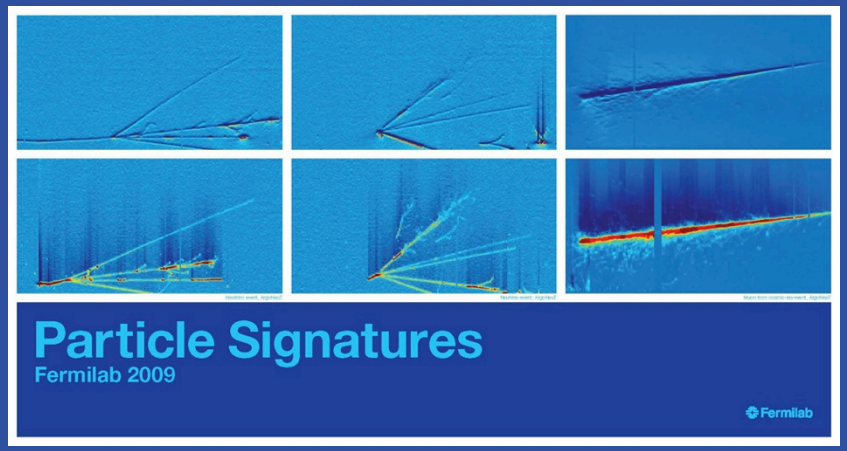

Reconstruction Software Development

Fuzzy event Displays

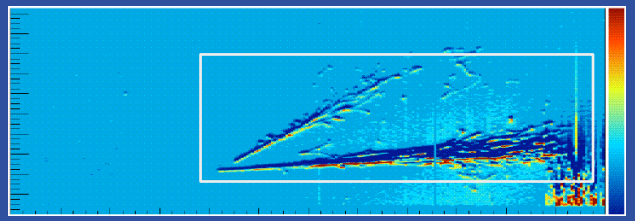

cleaned up - - -

using Computer Vision Software

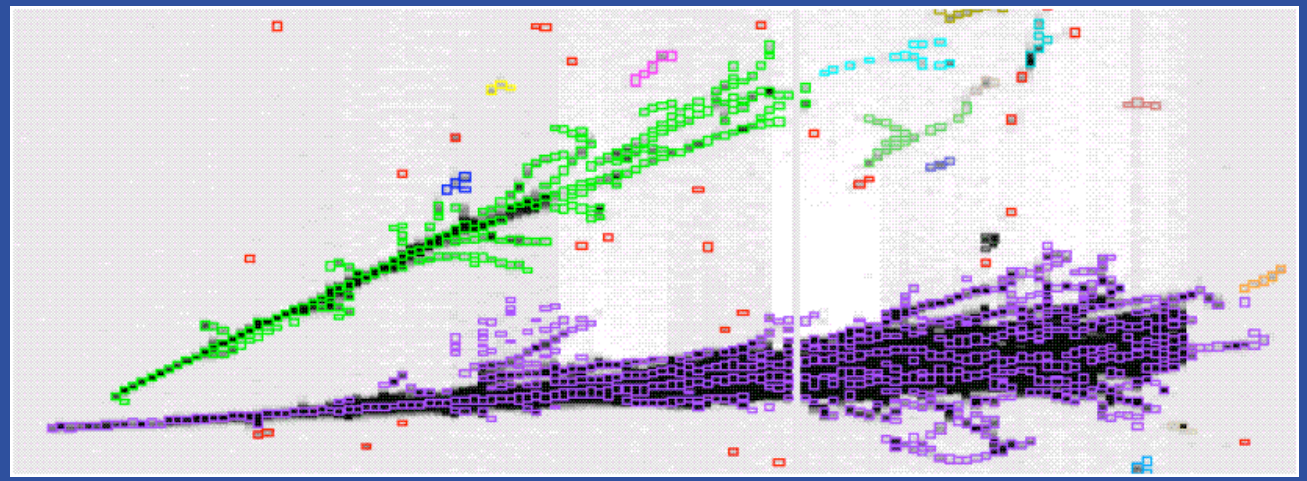

A field in computer science that seeks methods of extracting information from images and video

- Algorithms developed for shape and feature detection, and face recognition
- Open source algorithms

Summary

MicroBooNE combines detector development with physics

- Operating with physics goals in a neutrino beam provides an excellent assessment of the strengths and weaknesses of this detector technology
- Pursues development questions relevant to operation and analysis of massive LArTPC detectors

Integrated Plan Milestones								
	30t LAPD	Argo-NeuT	Micro-BooNE	30t Cryo-stat Proto-type	Installation Mock-up	~5% Elec-tronics Test	LBNE LAr20	Calib-ration Test
FY09Q3	Procurement	Running						
FY09Q4	Installation	Running						
FY10Q1		Running						
FY10Q2		Running	CD1					
FY10Q3	Results							
FY10Q4			CD2/3a	Procurement				
FY11Q1					Procurement			
FY11Q2			CD3b	Installation			CD1	
FY11Q4					Cryostat mock-up complete	Procurement		
FY12						Running	CD2	
FY13			Running		Complete	Complete		
FY14							CD3	
FY15								
FY16								
FY17 FY18							CD4	Running

Fermilab

Backup Slides

ArgoNeuT: NuMI Run

- ArgoNeuT acquired ~1.4E20 Protons On Target (P.O.T.), primarily in anti-neutrino mode
- Data is being used to develop techniques for reconstructing events in 3D
- Measuring dE/dx particle identification effectiveness using this data will be an important result
- We expect to obtain several cross-section measurements (e.g. CCQE)
- Essentially a "shift-free" detector once filled

ArgoNeuT POT delivered and accumulated

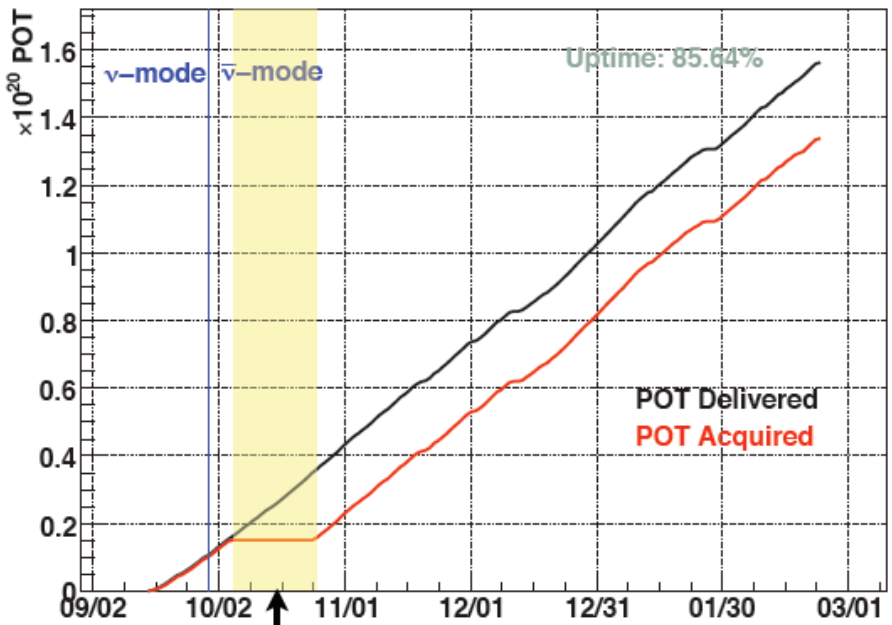

Failure and replacement of off-the-shelf cryocooler.

Installing Underground

Event Type	# in 1.4×10^{20} POT
ν_μ CC	5110
$\overline{\nu_\mu}$ CC	5490
ν_e CC	142
NC	4266

Total Sample

Liquid-Argon Time Projection Chambers

Outlook of R&D Program in the US

		Active Volume
Yale TPC & Bo Yale TPC: Dismantled Bo: Operational		0.00002 kton
		15x
ArgoNeuT Operational Physics: Measure neutrino-argon cross sections		0.0003 kton
		330x
MicroBooNE Construction begins 2010 Physics: Investigate low-energy neutrino interactions		0.1 kton
		4x50x
LAr TPC for LBNE R&D in progress Physics: Measure neutrino oscillations at 1,000+ km		20 kton
Final goal Replicate proven technology Physics: Search for CP violation in neutrino sector	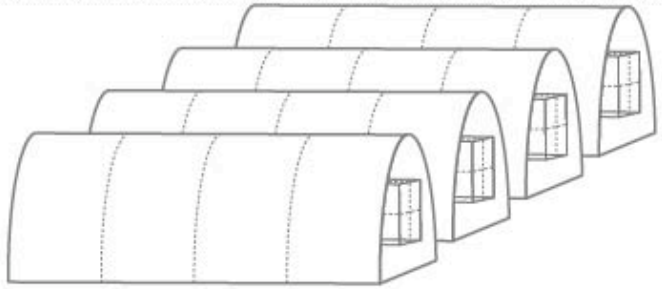	N x 20 kton

Liquid-Argon Time Projection Chambers

Status of R&D Program in the US

The first TPCs in the United States:

Yale TPC

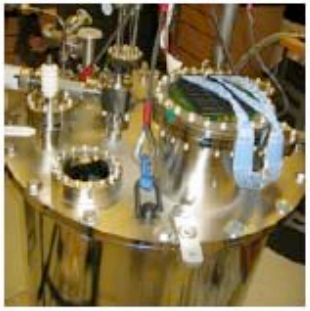

Location: Yale University
Active volume: 0.00002 kton
Year of first tracks: 2007

Bo

Location: Fermilab
Active volume: 0.00002 kton
Year of first tracks: 2008

ArgoNeuT

Location: Fermilab
Active volume: 0.0003 kton
Year of first tracks: 2008
First neutrinos: June 2009

MicroBooNE

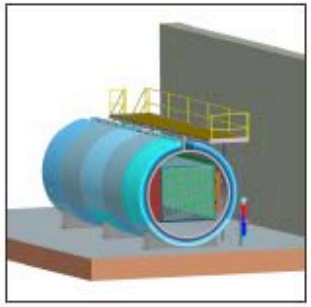

Location: Fermilab
Active volume: 0.1 kton
Start of construction: 2010

Test stands to improve liquid-argon technology:

Luke

Location: Fermilab
Purpose: materials test station
Operational: since 2008

LAPD

Location: Fermilab
Purpose: LAr purity demo
Operational: 2010