Spin and coupling determination of signals with missing energy at the LHC

Chien-Yi Chen
Carnegie Mellon University

In collaboration with Prof. Ayres Freitas,
JHEP 1102,002

Supersymmetry 2011

Outline

- Purpose and setup
- Spin determination
- Coupling determination
- Conclusions

Purpose

- Properties of new heavy particles beyond the standard model.

  e.g.

  - Mass
  - Spin
  - Coupling

- Model independent approach.
- Consider all possible assignments of spins and SU(2) representations of new particles.

Purpose

- Properties of new heavy particles beyond the standard model.

  e.g.

  - Mass
  - Spin ✓
  - Coupling ✓

- Model independent approach.

- Consider all possible assignments of spins and SU(2) representations of new particles.

Setup

$$pp \to Y^+Y^- \to \ell^+\ell^- X^0 \bar{X}^0, \qquad (\ell = e, \mu).$$

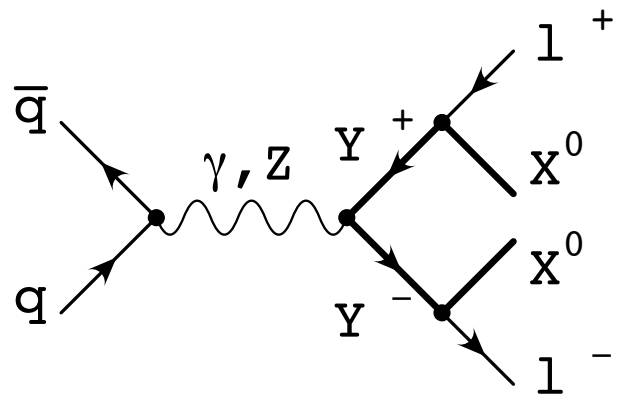

- Y: Charged massive particles.
- X: Missing energy signal; neutral massive particle. It can be a dark matter candidate.

Setup

$$pp \to Y^+Y^- \to \ell^+\ell^- X^0 \bar{X}^0, \qquad (\ell = e, \mu).$$

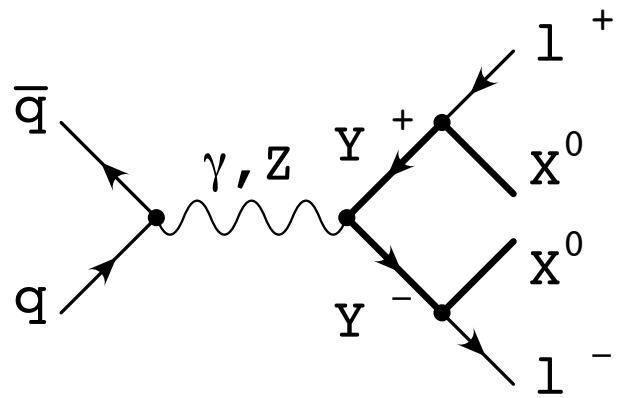

- Y: Charged massive particles.
- X: Missing energy signal; neutral massive particle. It can be a dark matter candidate.
- Assume a discrete symmetry to ensure X is pair produced:

  e.g.

  - R-parity in supersymmetry
  - KK parity in universal extra dimensions

Spins of the X and Y

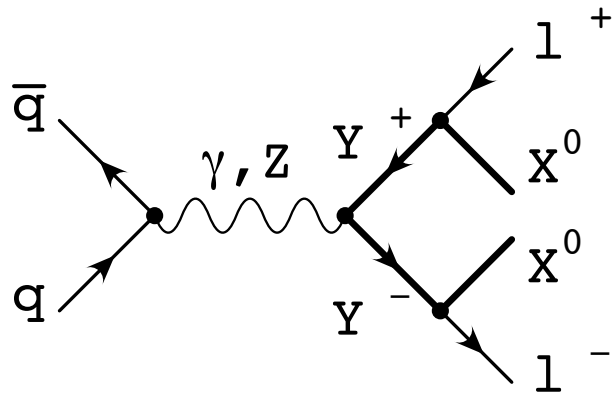

- Angular momentum conservation

Y	0	1/2	1
X	1/2	0 or 1	1/2
L	1/2	1/2	1/2

SU(2) representations of X and Y

- Singlet: **1** e.g. $e_R(x)$
- Doublet: **2** e.g. $L(x) = \begin{pmatrix} \nu_L(x) \\ E_L(x) \end{pmatrix}$
- Triplet (adjoint rep.): **3**, $[T_a, T_b] = i f_{abc} T_c$

  $[T_a]_{bc} = -i f_{abc}$

  e.g. $W^{\pm}$ W^0

[Doublet]$_{1\times2}$	[Doublet]$_{2\times1}$	[Singlet]$_{1\times1}$
[Singlet]$_{1\times1}$	[Singlet]$_{1\times1}$	[Singlet]$_{1\times1}$
[Doublet]$_{1\times2}$	[Triplet]$_{2\times2}$	[Doublet]$_{2\times1}$

	Y $s,\ I_{\mathrm{SU}(2)}$	X $s,\ I_{\mathrm{SU}(2)}$	ℓ $I_{\mathrm{SU}(2)}$	ZYY coupling	$XY\ell$ coupling
1	$0,\ \mathbf{1}$	$\frac{1}{2},\ \mathbf{1}$	$\mathbf{1}$	$Z^\mu Y^* \overleftrightarrow{\partial_\mu} Y$	$\overline{X}\frac{1+\gamma_5}{2}\ell Y^*$
2	$0,\ \mathbf{2}$	$\frac{1}{2},\ \mathbf{1}$	$\mathbf{2}$	$Z^\mu Y^* \overleftrightarrow{\partial_\mu} Y$	$\overline{X}\frac{1-\gamma_5}{2}\ell Y^*$
3	$0,\ \mathbf{3}$	$\frac{1}{2},\ \mathbf{2}$	$\mathbf{2}$	$Z^\mu Y^* \overleftrightarrow{\partial_\mu} Y$	$\overline{X}\frac{1-\gamma_5}{2}\ell Y^*$
4	$\frac{1}{2},\ \mathbf{1}$	$0,\ \mathbf{1}$	$\mathbf{1}$	$\overline{Y}\not{Z}Y$	$\overline{Y}\frac{1+\gamma_5}{2}\ell X$
5	$\frac{1}{2},\ \mathbf{1}$	$0,\ \mathbf{2}$	$\mathbf{2}$	$\overline{Y}\not{Z}Y$	$\overline{Y}\frac{1-\gamma_5}{2}\ell X$
6	$\frac{1}{2},\ \mathbf{1}$	$1,\ \mathbf{1}$	$\mathbf{1}$	$\overline{Y}\not{Z}Y$	$\overline{Y}\not{X}\frac{1+\gamma_5}{2}\ell$
7	$\frac{1}{2},\ \mathbf{2}$	$0,\ \mathbf{1}$	$\mathbf{2}$	$\overline{Y}\not{Z}Y$	$\overline{Y}\frac{1-\gamma_5}{2}\ell X$
8	$\frac{1}{2},\ \mathbf{2}$	$0,\ \mathbf{2}$	$\mathbf{1}$	$\overline{Y}\not{Z}Y$	$\overline{Y}\frac{1+\gamma_5}{2}\ell X$
9	$\frac{1}{2},\ \mathbf{2}$	$1,\ \mathbf{1}$	$\mathbf{2}$	$\overline{Y}\not{Z}Y$	$\overline{Y}\not{X}\frac{1-\gamma_5}{2}\ell$
10	$\frac{1}{2},\ \mathbf{3}$	$0,\ \mathbf{2}$	$\mathbf{2}$	$\overline{Y}\not{Z}Y$	$\overline{Y}\frac{1-\gamma_5}{2}\ell X$
11	$1,\ \mathbf{3}$	$\frac{1}{2},\ \mathbf{2}$	$\mathbf{2}$	$S[Z,Y,Y^*]$	$\overline{X}\not{Y}^*\frac{1-\gamma_5}{2}\ell$

$$A\overleftrightarrow{\partial_\mu}B \equiv A(\partial_\mu B) - (\partial_\mu A)B,$$

$$S[Z,Y,Y^*] \equiv Z_\mu\, Y^*_\nu \overleftrightarrow{\partial^\mu} Y^\nu + Y_\mu\, Z_\nu \overleftrightarrow{\partial^\mu} Y^{*\nu} + Y^*_\mu\, Y_\nu \overleftrightarrow{\partial^\mu} Z^\nu$$

	Y $s,\ I_{\mathrm{SU}(2)}$	X $s,\ I_{\mathrm{SU}(2)}$	ℓ $I_{\mathrm{SU}(2)}$	ZYY coupling	$XY\ell$ coupling
1	$0,\ \mathbf{1}$	$\frac{1}{2},\ \mathbf{1}$	$\mathbf{1}$	$Z^\mu Y^* \overleftrightarrow{\partial_\mu} Y$	$\overline{X}\frac{1+\gamma_5}{2}\ell Y^*$
2	$0,\ \mathbf{2}$	$\frac{1}{2},\ \mathbf{1}$	$\mathbf{2}$	$Z^\mu Y^* \overleftrightarrow{\partial_\mu} Y$	$\overline{X}\frac{1-\gamma_5}{2}\ell Y^*$
3	$0,\ \mathbf{3}$	$\frac{1}{2},\ \mathbf{2}$	$\mathbf{2}$	$Z^\mu Y^* \overleftrightarrow{\partial_\mu} Y$	$\overline{X}\frac{1-\gamma_5}{2}\ell Y^*$
4	$\frac{1}{2},\ \mathbf{1}$	$0,\ \mathbf{1}$	$\mathbf{1}$	$\overline{Y}\not{Z}Y$	$\overline{Y}\frac{1+\gamma_5}{2}\ell X$
5	$\frac{1}{2},\ \mathbf{1}$	$0,\ \mathbf{2}$	$\mathbf{2}$	$\overline{Y}\not{Z}Y$	$\overline{Y}\frac{1-\gamma_5}{2}\ell X$
6	$\frac{1}{2},\ \mathbf{1}$	$1,\ \mathbf{1}$	$\mathbf{1}$	$\overline{Y}\not{Z}Y$	$\overline{Y}\not{X}\frac{1+\gamma_5}{2}\ell$
7	$\frac{1}{2},\ \mathbf{2}$	$0,\ \mathbf{1}$	$\mathbf{2}$	$\overline{Y}\not{Z}Y$	$\overline{Y}\frac{1-\gamma_5}{2}\ell X$
8	$\frac{1}{2},\ \mathbf{2}$	$0,\ \mathbf{2}$	$\mathbf{1}$	$\overline{Y}\not{Z}Y$	$\overline{Y}\frac{1+\gamma_5}{2}\ell X$
9	$\frac{1}{2},\ \mathbf{2}$	$1,\ \mathbf{1}$	$\mathbf{2}$	$\overline{Y}\not{Z}Y$	$\overline{Y}\not{X}\frac{1-\gamma_5}{2}\ell$
10	$\frac{1}{2},\ \mathbf{3}$	$0,\ \mathbf{2}$	$\mathbf{2}$	$\overline{Y}\not{Z}Y$	$\overline{Y}\frac{1-\gamma_5}{2}\ell X$
11	$1,\ \mathbf{3}$	$\frac{1}{2},\ \mathbf{2}$	$\mathbf{2}$	$S[Z,Y,Y^*]$	$\overline{X}\not{Y}^*\frac{1-\gamma_5}{2}\ell$

$$A\overleftrightarrow{\partial_\mu}B \equiv A(\partial_\mu B) - (\partial_\mu A)B,$$

$$S[Z,Y,Y^*] \equiv Z_\mu Y^*_\nu \overleftrightarrow{\partial^\mu} Y^\nu + Y_\mu Z_\nu \overleftrightarrow{\partial^\mu} Y^{*\nu} + Y^*_\mu Y_\nu \overleftrightarrow{\partial^\mu} Z^\nu$$

Example: in supersymmetry

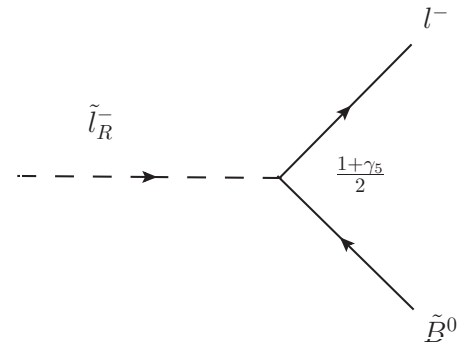

Combination 11

	Y $s,\ I_{\mathrm{SU}(2)}$	X $s,\ I_{\mathrm{SU}(2)}$	ℓ $I_{\mathrm{SU}(2)}$	ZYY coupling	$XY\ell$ coupling	sample model and decay $Y^- \to \ell^- X$
11	$1,\ \mathbf{3}$	$\frac{1}{2},\ \mathbf{2}$	$\mathbf{2}$	$S[Z,Y,Y^*]$	$\overline{X}\not{Y}^* \frac{1-\gamma_5}{2}\ell$	UED $W^-_{\mu,(1)} \to \ell^- \nu_{(1)}$

$$S[Z,Y,Y^*] \equiv Z_\mu\, Y^*_\nu \overleftrightarrow{\partial^\mu} Y^\nu + Y_\mu\, Z_\nu \overleftrightarrow{\partial^\mu} Y^{*\nu} + Y^*_\mu\, Y_\nu \overleftrightarrow{\partial^\mu} Z^\nu$$

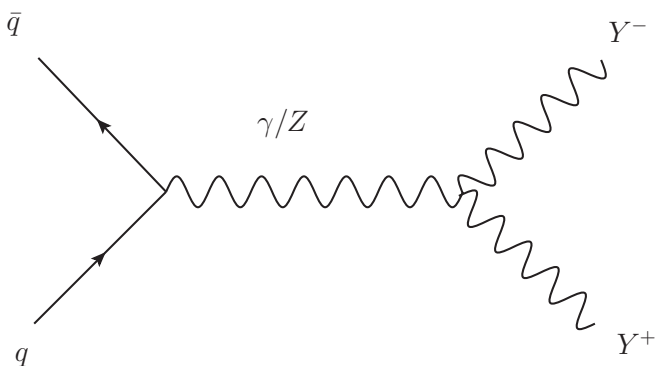

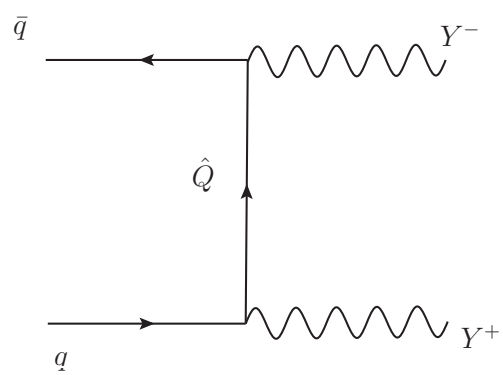

- s-channel contribution alone grows monotonically with the center-of -mass energy. t-channel diagram must be considered due to unitarity.
- s- and t-channel interfere negatively.
- In the t-channel, heavy $\hat{Q}$ for the masses 500GeV and 1000GeV are considered in the simulation.
- If $\hat{Q}$ is light, it has larger cross section and might be observed directly.

Spin determination

Production angular distribution:

SUSY scalar Y (spin 0): $$\frac{d\sigma}{d\cos\theta^*} \propto 1 - \cos^2\theta^*,$$

UED fermion Y (spin $\frac{1}{2}$): $$\frac{d\sigma}{d\cos\theta^*} \propto 2 + \beta_Y^2(\cos^2\theta^* - 1),$$

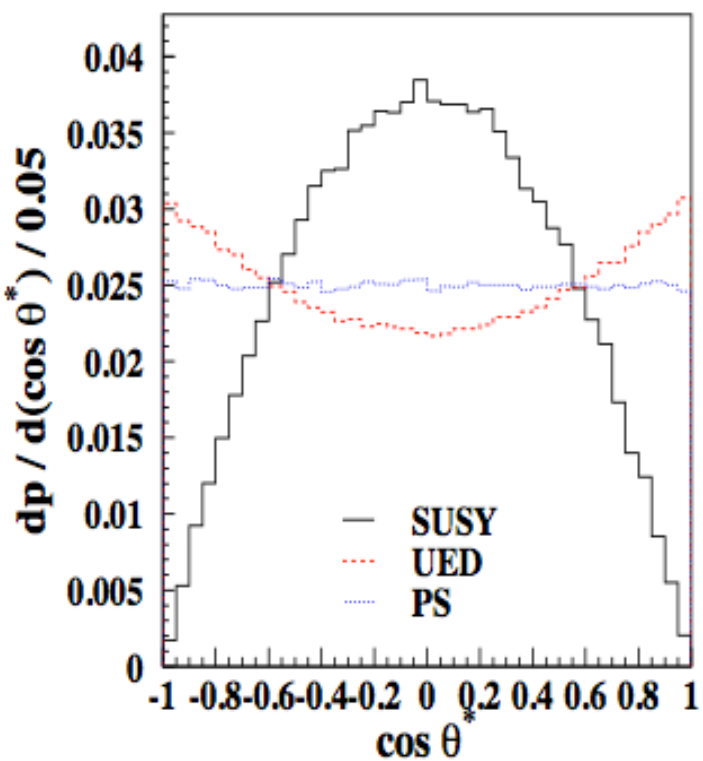

- θ^* stands for the production angle.
- PS stands for phase space.

A. Barr, JHEP 0602, 042(2006)

Variables for spin determination

Effective mass $M_{\rm eff} = p_{{\rm T},\ell^+} + p_{{\rm T},\ell^-} + \not{p}_{\rm T},$

Azimuthal angle difference of the two leptons $\Delta\phi_{\ell\ell} = |(\phi_{\ell^+} - \phi_{\ell^-}) \mod 2\pi|$

Barr's variable $\cos\theta^*_{\ell\ell} = \tanh\frac{|\eta_{\ell^+} - \eta_{\ell^-}|}{2} = \tanh\frac{\Delta\eta_{\ell\ell}}{2}$

A. Barr, JHEP 0602, 042(2006)

- η_{ℓ^-} : The pseudorapidity of the lepton

  Pseudorapidity: $\eta = \frac{1}{2} log\left[\frac{p+p_z}{p-p_z}\right] = -log[tan(\theta/2)]$

- $\theta^*_{\ell\ell}$ is strongly correlated to the production angle.

- They are all Lorentz invariant along the boost direction.

Numerical results for spin determination

	Y $s,\ I_{SU(2)}$	X $s,\ I_{SU(2)}$	ℓ $I_{SU(2)}$	ZYY coupling	$XY\ell$ coupling
3	$0,\ \mathbf{3}$	$\frac{1}{2},\ \mathbf{2}$	$\mathbf{2}$	$Z^\mu Y^* \overleftrightarrow{\partial}_\mu Y$	$\overline{X}\frac{1-\gamma_5}{2}\ell Y^*$
10	$\frac{1}{2},\ \mathbf{3}$	$0,\ \mathbf{2}$	$\mathbf{2}$	$\overline{Y}\not{Z}Y$	$\overline{Y}\frac{1-\gamma_5}{2}\ell X$
11	$1,\ \mathbf{3}$	$\frac{1}{2},\ \mathbf{2}$	$\mathbf{2}$	$S[Z,Y,Y^*]$	$\overline{X}\not{Y}^*\frac{1-\gamma_5}{2}\ell$

$\sqrt{\chi^2}$ value for a 5-bin $\chi^2 -$ test , 5000 parton-level events. $m_Y = 300\ GeV$ and $m_X = 100\ GeV$.

Variable	(model A, model B)				
	(3,10)	(3,11) [$M_{\hat{Q}}$=1 TeV]	(3,11) [$M_{\hat{Q}}$=0.5 TeV]	(10,11) [$M_{\hat{Q}}$=1 TeV]	(10,11) [$M_{\hat{Q}}$=0.5 TeV]
$\tanh(\Delta\eta_{\ell\ell}/2)$	19.0	18.6	26.0	2.4	8.0
$M_{\rm eff}$	37.5	3.9	25.1	30.7	9.5
$\Delta\phi_{\ell\ell}$	16.3	21.4	10.7	41.1	29.0
All combined	37.5	21.4	26.0	41.1	29.0

Coupling determination

- Definition of the charge asymmetry:

$$A_{\ell^+\ell^-} = \frac{N(E_{\ell^-} > E_{\ell^+}) - N(E_{\ell^+} > E_{\ell^-})}{N(E_{\ell^-} > E_{\ell^+}) + N(E_{\ell^+} > E_{\ell^-})}$$

$N(E_{\ell^-} > E_{\ell^+})$ denotes the number of events for which ℓ^- has a larger energy than ℓ^+.

- It is well correlated with the forward and backward asymmetry at the LHC.

Coupling determination

Review of the forward-backward asymmetry:

e.g. $q\bar{q} \to l^+ l^-$

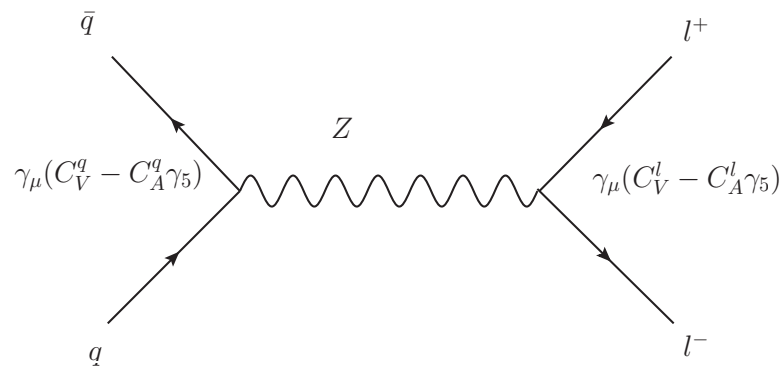

In the center of mass frame:

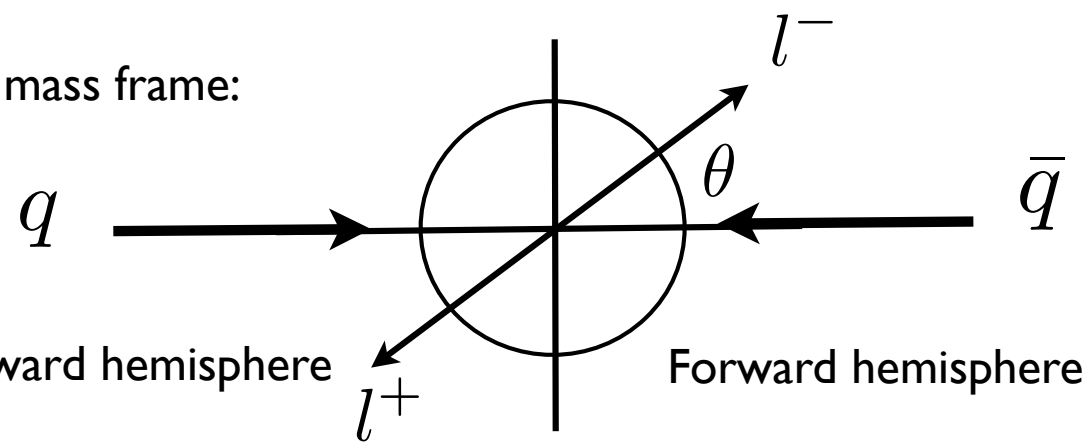

Forward-backward asymmetry

$$\frac{d\sigma}{d\cos\theta} = N_c[(1+\cos^2\theta)F_0(s) + 2\cos\theta F_1(s)]$$, where N_c is the color factor.

$$F_0(s) = \frac{\pi\alpha^2}{2s}(q_q^2 q_l^2 + 2Re\chi(s)q_q q_l C_V^q C_V^l + |\chi(s)|^2((C_V^q)^2 + (C_A^q)^2)((C_V^l)^2 + (C_A^l)^2))$$

$$F_1(s) = \frac{\pi\alpha^2}{2s}(2Re\chi(s)q_q q_l C_A^q C_A^l + |\chi(s)|^2 2C_V^q C_V^l 2C_A^q C_A^l),$$

with

$$\chi(s) = \frac{s}{s - M_Z^2 + is\Gamma_Z/M_Z}$$

- Definition of forward-backward asymmetry:

$$A_{FB} = \frac{N_F - N_B}{N_F + N_B}$$

$$F = \int_0^1 \frac{d\sigma}{d\cos\theta} d\cos\theta, \quad B = \int_{-1}^0 \frac{d\sigma}{d\cos\theta} d\cos\theta$$

Difficult to define forward-backward asymmetry at the LHC

- Hard to define the forward direction
- Center-of-mass energy of quark and anti-quark is unknown
  - The incoming quark are more energetic than incoming anti-quark because the valence quarks are more energetic than sea quarks.

Charge asymmetry

Center of mass frame: $E_{l^-} = \sqrt{m^2 + p_x^2 + p_y^2 + p_z^2} = E_{l^+}$

$$A_{FB} = \frac{N_F - N_B}{N_F + N_B}$$

Laboratory frame:

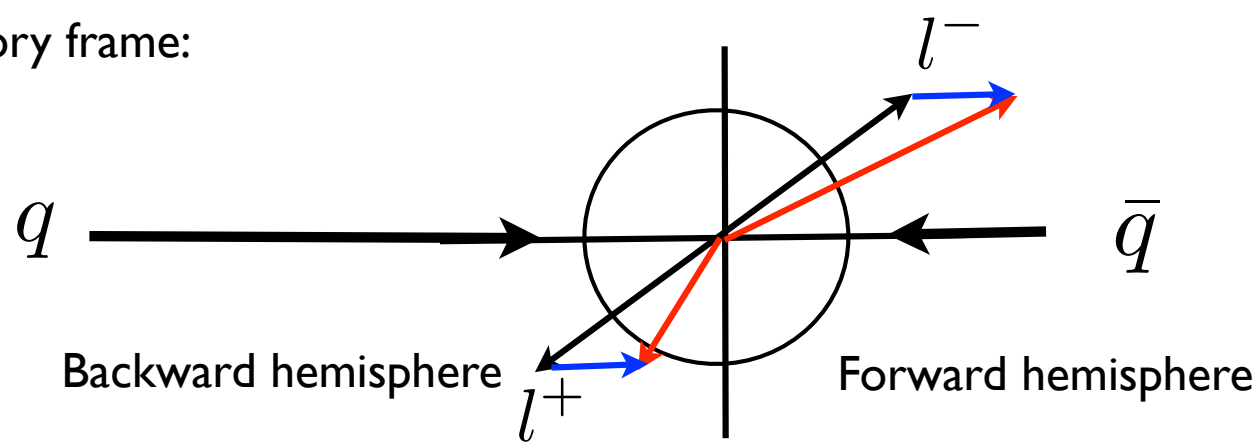

$$E_{l^-} = \sqrt{m^2 + p_x^2 + p_y^2 + (p_z + p'_z)^2}$$

$$E_{l^+} = \sqrt{m^2 + (-p_x)^2 + (-p_y)^2 + (-p_z + p'_z)^2}$$

- Define charge asymmetry:

$$A_{\ell^+\ell^-} = \frac{N(E_{\ell^-} > E_{\ell^+}) - N(E_{\ell^+} > E_{\ell^-})}{N(E_{\ell^-} > E_{\ell^+}) + N(E_{\ell^+} > E_{\ell^-})}$$

$N(E_{\ell^-} > E_{\ell^+})$ denotes the number of events for which ℓ^- has a larger energy than ℓ^+.

Coupling determination

- In the production part : Charge asymmetry is zero.

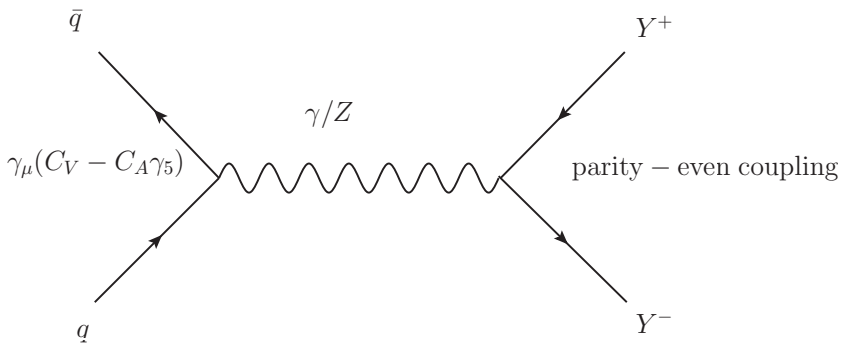

No charge asymmetry

- Charge asymmetry requires further decay:

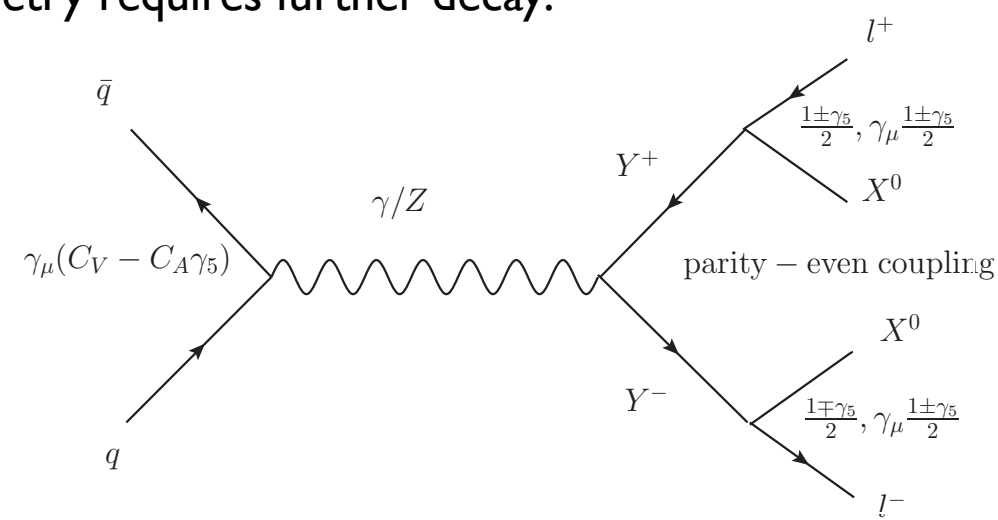

- However, charge asymmetry does not work for scalar Y cases due to the absence of spin correlations between the production and decay parts of the process.
- For fermion Y cases, the V-A structure still exists.

	Y $s,\ I_{\mathrm{SU}(2)}$	X $s,\ I_{\mathrm{SU}(2)}$	ℓ $I_{\mathrm{SU}(2)}$	ZYY coupling	$XY\ell$ coupling
1	$0,\ \mathbf{1}$	$\frac{1}{2},\ \mathbf{1}$	$\mathbf{1}$	$Z^\mu Y^* \overleftrightarrow{\partial}_\mu Y$	$\overline{X}\frac{1+\gamma_5}{2}\ell Y^*$
2	$0,\ \mathbf{2}$	$\frac{1}{2},\ \mathbf{1}$	$\mathbf{2}$	$Z^\mu Y^* \overleftrightarrow{\partial}_\mu Y$	$\overline{X}\frac{1-\gamma_5}{2}\ell Y^*$
3	$0,\ \mathbf{3}$	$\frac{1}{2},\ \mathbf{2}$	$\mathbf{2}$	$Z^\mu Y^* \overleftrightarrow{\partial}_\mu Y$	$\overline{X}\frac{1-\gamma_5}{2}\ell Y^*$
4	$\frac{1}{2},\ \mathbf{1}$	$0,\ \mathbf{1}$	$\mathbf{1}$	$\overline{Y}\not{Z}Y$	$\overline{Y}\frac{1+\gamma_5}{2}\ell X$
5	$\frac{1}{2},\ \mathbf{1}$	$0,\ \mathbf{2}$	$\mathbf{2}$	$\overline{Y}\not{Z}Y$	$\overline{Y}\frac{1-\gamma_5}{2}\ell X$
6	$\frac{1}{2},\ \mathbf{1}$	$1,\ \mathbf{1}$	$\mathbf{1}$	$\overline{Y}\not{Z}Y$	$\overline{Y}\not{X}\frac{1+\gamma_5}{2}\ell$
7	$\frac{1}{2},\ \mathbf{2}$	$0,\ \mathbf{1}$	$\mathbf{2}$	$\overline{Y}\not{Z}Y$	$\overline{Y}\frac{1-\gamma_5}{2}\ell X$
8	$\frac{1}{2},\ \mathbf{2}$	$0,\ \mathbf{2}$	$\mathbf{1}$	$\overline{Y}\not{Z}Y$	$\overline{Y}\frac{1+\gamma_5}{2}\ell X$
9	$\frac{1}{2},\ \mathbf{2}$	$1,\ \mathbf{1}$	$\mathbf{2}$	$\overline{Y}\not{Z}Y$	$\overline{Y}\not{X}\frac{1-\gamma_5}{2}\ell$
10	$\frac{1}{2},\ \mathbf{3}$	$0,\ \mathbf{2}$	$\mathbf{2}$	$\overline{Y}\not{Z}Y$	$\overline{Y}\frac{1-\gamma_5}{2}\ell X$
11	$1,\ \mathbf{3}$	$\frac{1}{2},\ \mathbf{2}$	$\mathbf{2}$	$S[Z,Y,Y^*]$	$\overline{X}\not{Y}^*\frac{1-\gamma_5}{2}\ell$

Indistinguishable by using charge asymmetry.

Most of them are distinguishable by using charge asymmetry!

$$A\overleftrightarrow{\partial}_\mu B \equiv A(\partial_\mu B) - (\partial_\mu A)B,$$

$$S[Z,Y,Y^*] \equiv Z_\mu\, Y^*_\nu \overleftrightarrow{\partial^\mu} Y^\nu + Y_\mu\, Z_\nu \overleftrightarrow{\partial^\mu} Y^{*\nu} + Y^*_\mu\, Y_\nu \overleftrightarrow{\partial^\mu} Z^\nu$$

R_{ZA} : Ratio of ZYY to AYY coupling

$$B_\mu = Cos\theta_w A_\mu - Sin\theta_w Z_\mu$$
$$W^3_\mu = Sin\theta_w A_\mu + Cos\theta_w Z_\mu$$

- Singlet

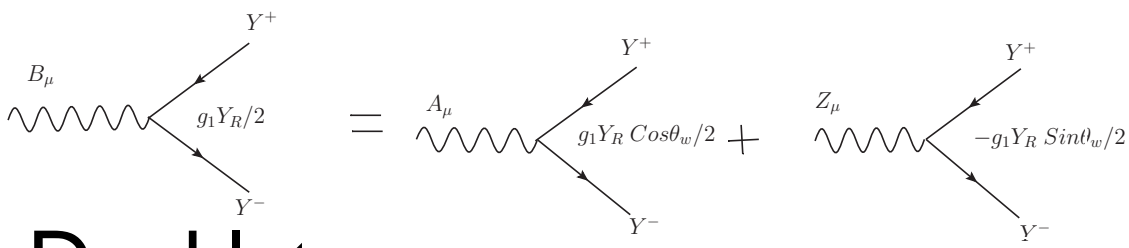

$$R_{ZA} = -tan\theta_w$$

- Doublet

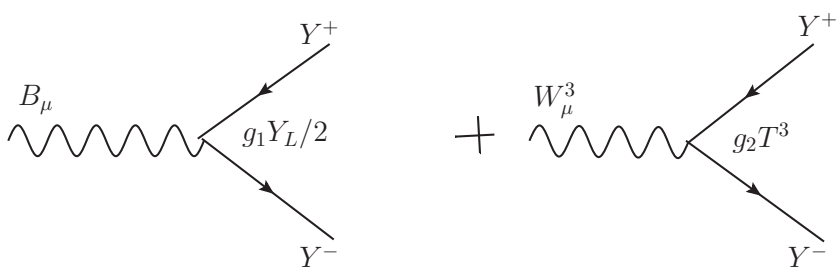

$$Y_R = -2$$
$$Y_L = -1$$
$$T^3 = -\frac{1}{2}$$
$$e = g_1 cos\theta_w = g_2 sin\theta_w$$

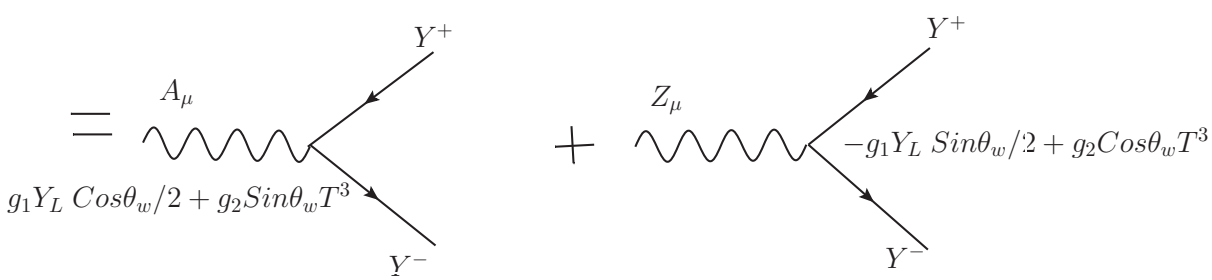

$$R_{ZA} = cot(2\theta_w)$$

- Triplet

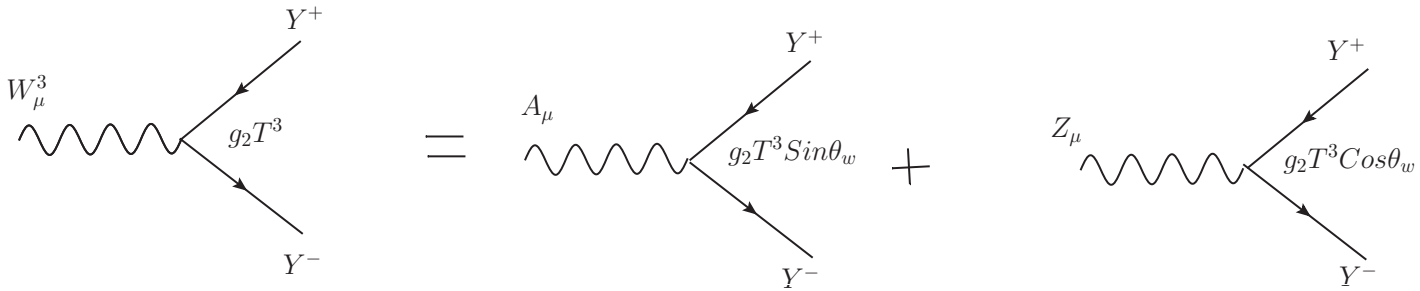

$$R_{ZA} = cot\theta_w$$

$$sin\theta_w = 0.231$$

$I_{SU(2)}$	R_{ZA}
1	$-\tan\theta_W \approx -0.548$
2	$\cot(2\theta_W) \approx 0.638$
3	$\cot\theta_W \approx 1.824$

Coupling determination

- The relative sign of $A_{l^-l^+}$ is connected to the sign of the ratio R_{ZA} and the sign of the γ_5 term in the XYL coupling.

	Y $s,\ I_{\mathrm{SU}(2)}$	X $s,\ I_{\mathrm{SU}(2)}$	ℓ $I_{\mathrm{SU}(2)}$	ZYY coupling	$XY\ell$ coupling
4	$\frac{1}{2}$, **1**	0, **1**	**1**	$\overline{Y}\not{Z}Y$	$\overline{Y}\frac{1+\gamma_5}{2}\ell X$
5	$\frac{1}{2}$, **1**	0, **2**	**2**	$\overline{Y}\not{Z}Y$	$\overline{Y}\frac{1-\gamma_5}{2}\ell X$
6	$\frac{1}{2}$, **1**	1, **1**	**1**	$\overline{Y}\not{Z}Y$	$\overline{Y}\not{X}\frac{1+\gamma_5}{2}\ell$
7	$\frac{1}{2}$, **2**	0, **1**	**2**	$\overline{Y}\not{Z}Y$	$\overline{Y}\frac{1-\gamma_5}{2}\ell X$
8	$\frac{1}{2}$, **2**	0, **2**	**1**	$\overline{Y}\not{Z}Y$	$\overline{Y}\frac{1+\gamma_5}{2}\ell X$
9	$\frac{1}{2}$, **2**	1, **1**	**2**	$\overline{Y}\not{Z}Y$	$\overline{Y}\not{X}\frac{1-\gamma_5}{2}\ell$
10	$\frac{1}{2}$, **3**	0, **2**	**2**	$\overline{Y}\not{Z}Y$	$\overline{Y}\frac{1-\gamma_5}{2}\ell X$

Combination	4	5	6	7	8	9	10
$A_{\ell^+\ell^-}$	0.20	−0.22	0.13	0.17	−0.18	0.10	0.20

$I_{\mathrm{SU}(2)}$	R_{ZA}
1	$-\tan\theta_W \approx -0.548$
2	$\cot(2\theta_W) \approx 0.638$
3	$\cot\theta_W \approx 1.824$

Numerical results for coupling determination

		model A					
		4	5	6	7	8	9
model B	5	**36**					
	6	4.9	**29**				
	7	*1.6*	**33**	2.9			
	8	**32**	3.5	**26**	**29**		
	9	6.7	**27**	*1.5*	4.7	**23**	
	10	*0.3*	**37**	5.8	*2.2*	**33**	7.6

- Statistical significance, in units of standard deviations.
- 5000 parton-level events without cut and detector effects.
- The differential asymmetry $dA_{\ell^+\ell^-}/d\tanh(\Delta\eta_{\ell\ell}/2)$ is used.

Conclusions

- New physics processes with missing energy in the final state are challenging to analyze at the LHC since they offer only few kinematical handles.
- Two new variables for spin determination and one new variables for coupling determination are introduced.
- s_Y = 0: It is generally not possible to discriminate between cases with different couplings.
- s_Y = 1/2, only some pairs cannot achieve a 3 sigma discrimination with a realistic number of a few thousand events.
- Fast detector simulation with selection cuts are performed and we found our conclusion still hold.

Thank you.