MICE Spectrometer Solenoid

Muon Accelerator Program (MAP)

PMG Meeting

January12, 2011

Steve Virostek
Lawrence Berkeley National Lab

Topics

- MICE technical review
- Magnet analyses
- Responses to committee report
- Design modification plan
- Schedule, budget and manpower
- Current Status

MICE Technical Review

- An assessment and analyses of various aspects of the magnet design has been carried out by LBNL
- A preliminary design modification plan was presented to a MICE technical review committee on 10/27/10
- Preliminary comments were received from the committee on 11/22/10
- The committee's final report with recommendations was issued on 12/14/10

Heat Load Analysis

- The heat leaks due to the dominant static sources have been re-evaluated
- The focus of the calculations was the heat leaks into the 4.2K cold mass as these directly relate to the issue of LHe boil-off during operation
- Other aspects of magnet thermal performance including heat loads on the shield and vacuum insulation have also been considered
- The dynamic heat loads that occur during cooldown or current ramp-up when the magnet system is not in equilibrium have been ignored as they are negligible during long-term operation

Electromagnetic Calculations

- The design of the passive magnet protection system is being reviewed and analyzed under the various operational regimes
- The areas covered include
  - Peak voltages to ground and inter-layer
  - A more clear understanding of coupling between coils during various quench scenarios
  - A detailed estimate of the current decay and current seen by the shunt resistors, and feedback on possible improvements to the selected resistance values
  - An estimate of the role of quenchback from the aluminum mandrel
- The suitability of the existing passive quench protection system and the possible need for an active system is being assessed

Responses to Committee Report

- The committee report includes a series of recommendations for the Spectrometer Solenoid team
- The LBNL team has reviewed the recommendations and has prepared responses that are detailed in a separate document
- The committee recommended that an active quench and lead protection system be implemented on the magnets
- LBNL is conducting a series of analyses to determine whether or not an active system will be necessary
- Other recommendations related to the heat load calculations are currently being undertaken at LBNL

Design Modification Plan

- A preliminary design modification plan has been developed by LBNL. The plan includes the following:
  - reduction of heat leaks to the cold mass
  - the addition of more cryo cooling power
  - assessment of the suitability of the passive quench protection system
  - modification of the LTS leads to prevent burn-out
- The plan has been detailed in a separate document and posted on the website for this meeting

Proposed 5 + 1 Cryocooler Layout

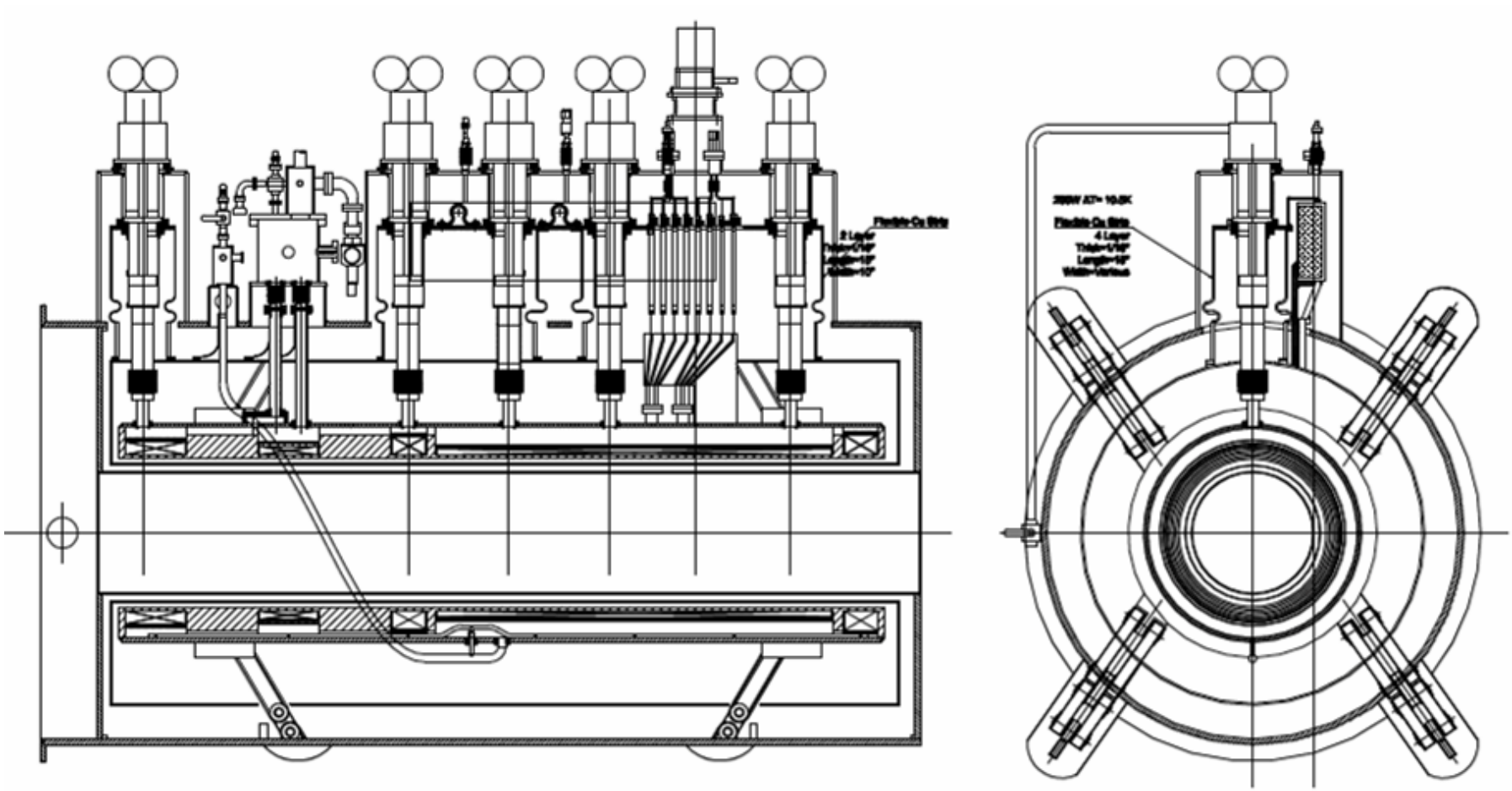

Schedule, Budget and Manpower

- A detailed straw man schedule has been assembled based on LBNL experience that provides a compilation of the tasks with an estimate of the required durations
- A final, resource loaded schedule will be developed with the vendor once the repair plan is complete
- An estimate of the remaining costs to MAP to complete the Spectrometer Solenoids has been compiled, including both manpower and hardware
- Contingency was estimated to account for uncertainties, including the possible need for active quench protection
- Required manpower has been identified and is available

MAP Tech Board

- Preliminary plan presented to MAP TB yesterday
- Several comments arose from the meeting:
  - A coupled quench analysis should be carried out with all MICE magnets in place
  - The effects of stray fields on the coolers (particularly the 1-stage GM) and the need for local shielding needs to be assessed
  - The means for protecting the leads in a power outage needs to be established
- The possible concept for an active quench protection system was questioned
  - A system using heaters may be inadequate
  - A design study will be conducted if an active system is needed

Current Status

- The electromagnetic and heat load analyses are under way and expected to be complete by the end of this month
- The quench and lead protection issue presents a major uncertainty in the completion of the plan
- Upon completion of the analyses and the final modification plan, the Spectrometer Solenoid team will present the plan to the MICE tech board
- LBNL has been meeting with the vendor to ensure the project can restart promptly when the plan is complete