ODU/JLAB PARALLEL-BAR CAVITY DEVELOPMENT

Jean Delayen
Subashini de Silva

Center for Accelerator Science
Old Dominion University
and
Thomas Jefferson National Accelerator Facility

Parallel Bar Cavity Activities at ODU/JLab

- **Deflecting Cavity**
  - Jefferson Lab 12 GeV Upgrade (499 MHz)
    (DOE-NP, ODU-Niowave P1 STTR completed)
  - *Project-X* (365.6 MHz)
    (ODU-Niowave P1 STTR completed, P2 submitted)

- **Crab Cavity**
  - LHC Luminosity Upgrade (400 MHz)
    (LARP, ODU-Niowave P2 STTR)
  - *Electron-ion Collider* (750 MHz)
    (ODU-Niowave P1 STTR completed, P2 submitted)

Parallel-bar Cavity Properties

- Compact design
  - Supports low frequencies
- Fundamental deflecting/crabbing mode has the lowest frequency
  - No LOMs, no need for notch filter in HOM coupler
  - Nearest HOM widely separated (~ 150 MHz)
- Low surface fields and high shunt impedance
- Good balance between peak surface electric and magnetic field
  - Criteria: E_p<35 MV/m, B_p<80 mT

Parallel Bar Cavity Concept

Two Fundamental TEM Modes

- 0 mode :- Accelerating mode
- π mode :- Deflecting or crabbing mode

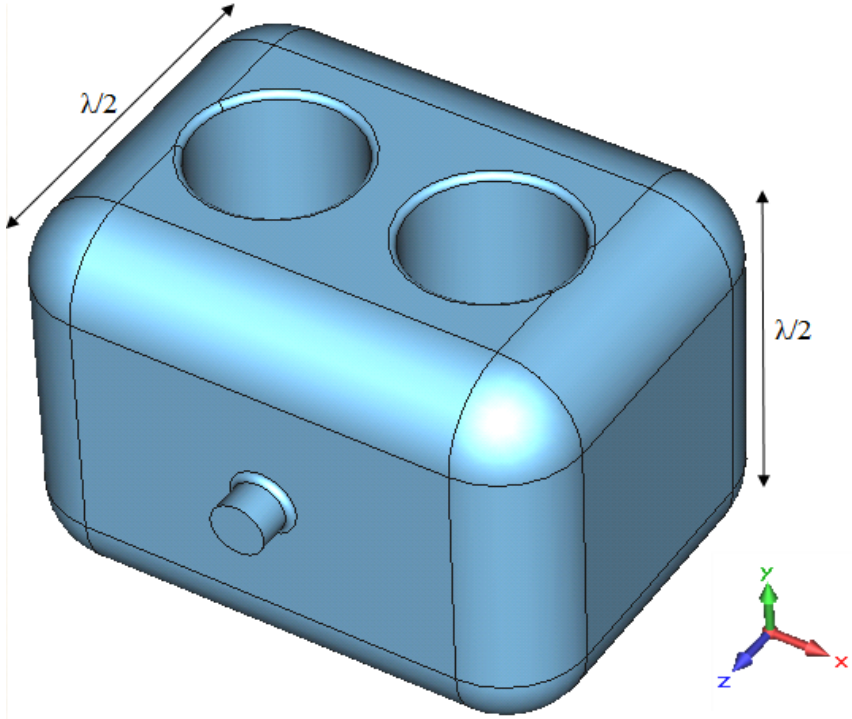

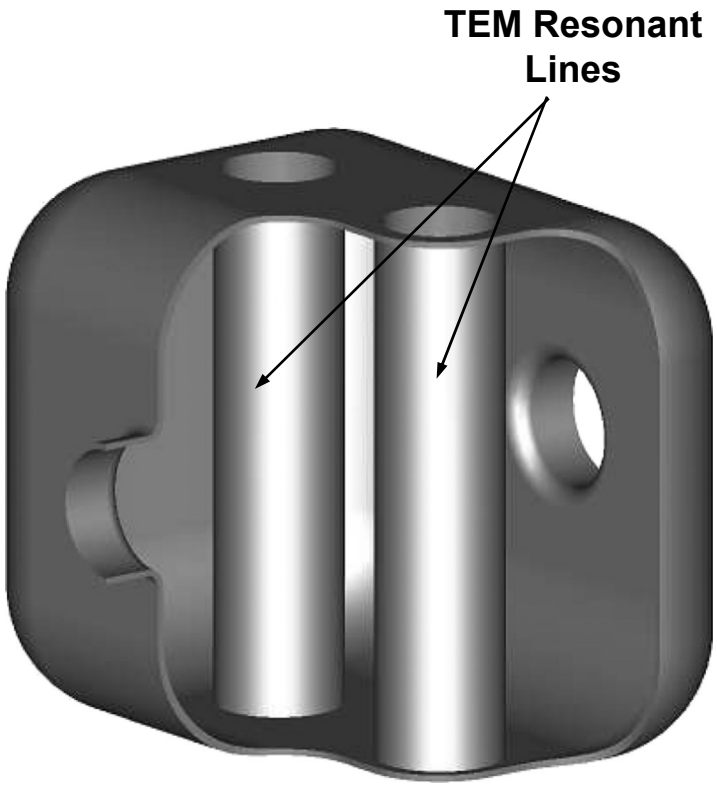

Parallel-bar Cavity Concept

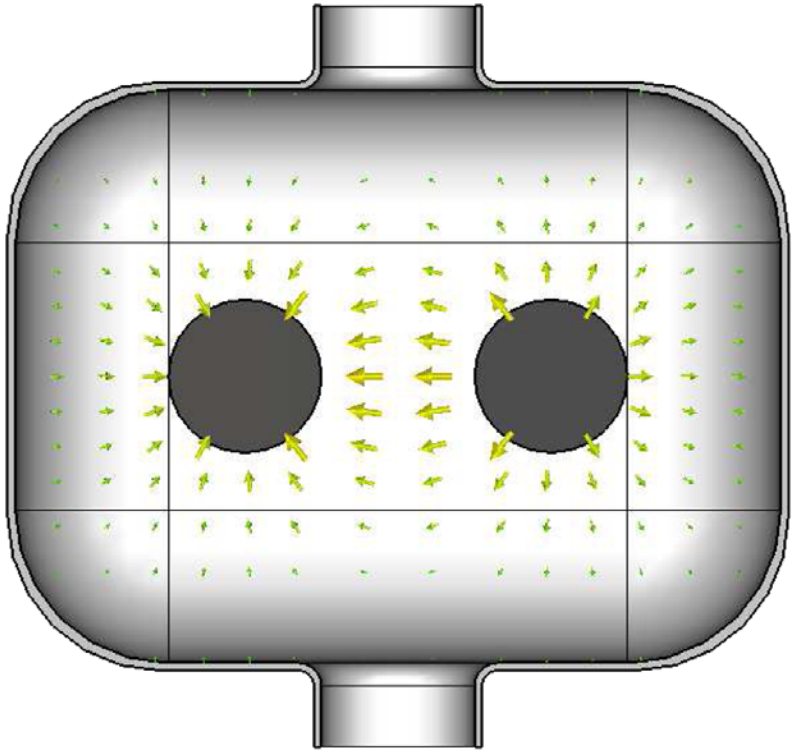

E field on mid plane
(Along the beam line)

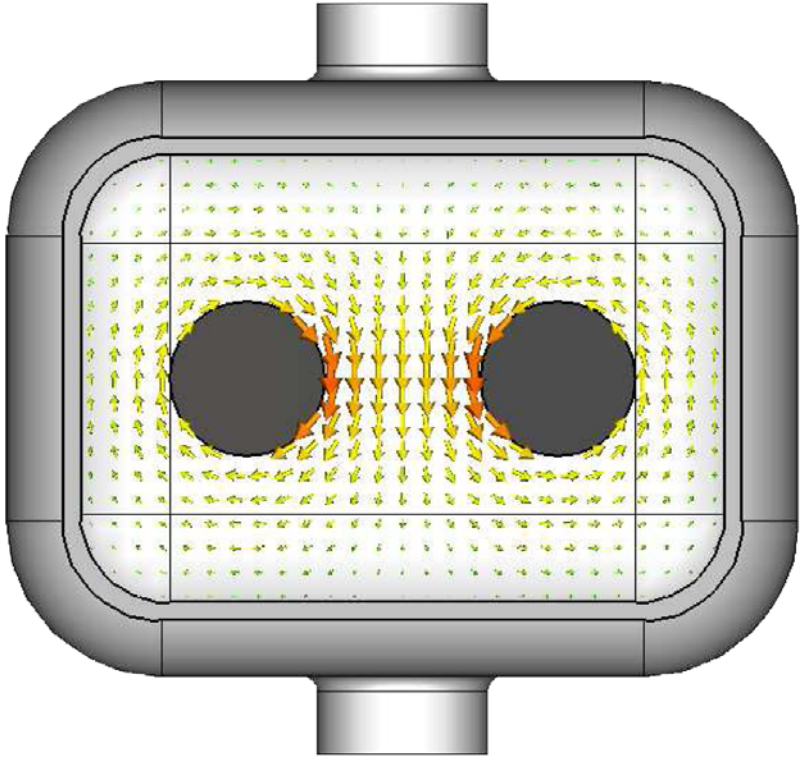

B field on top plane

Deflection is due to the interaction with the Electric Field

Dimensional Constraints

499 MHz Deflecting Cavity for JLab Upgrade

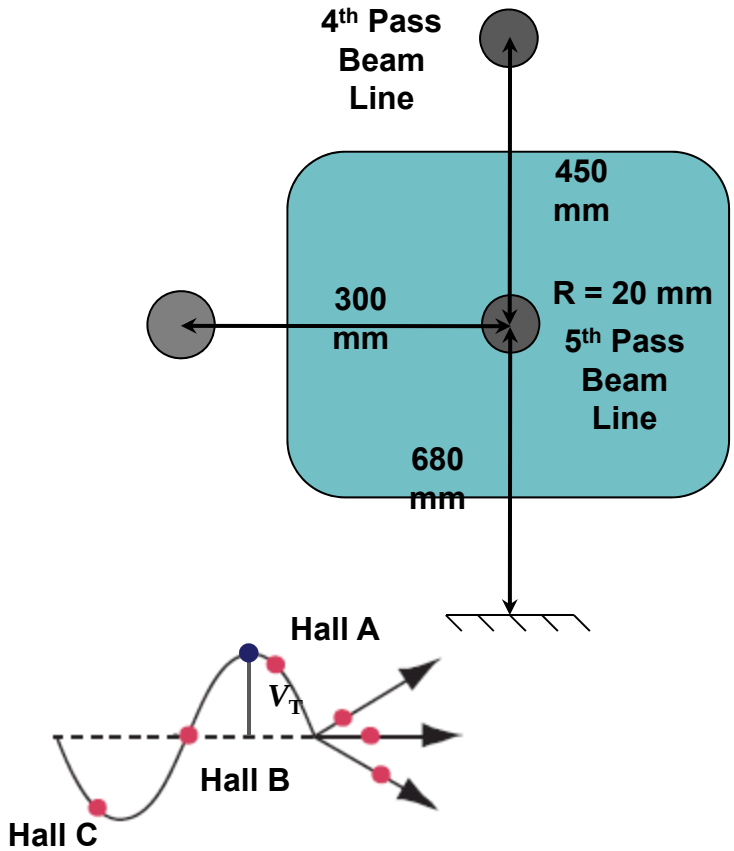

400 MHz Crabbing Cavity for LHC

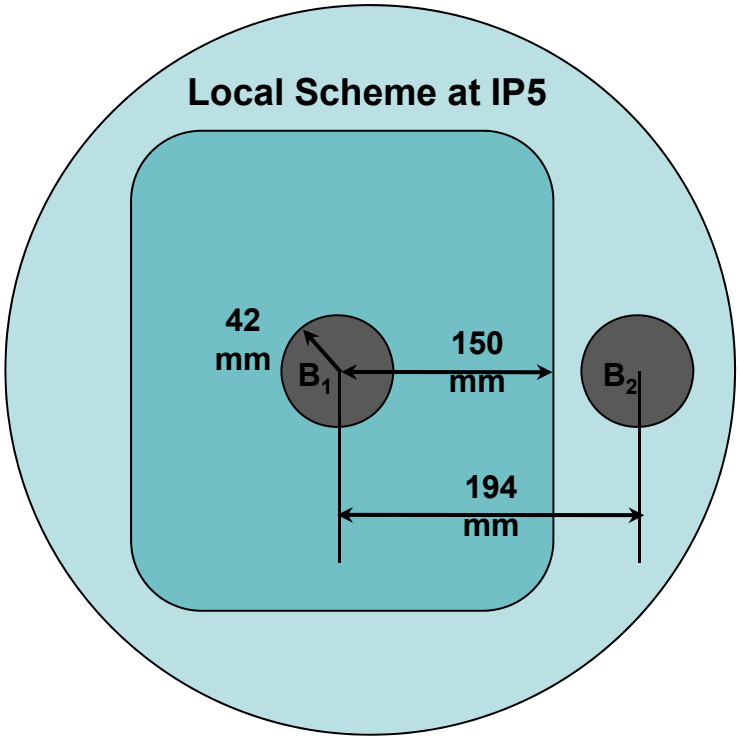

Global scheme :
Separation between beam pipes – 420 mm

No dimensional constraints in Project-X and ELIC deflecting/crabbing designs

Evolution of 499 MHz Designs

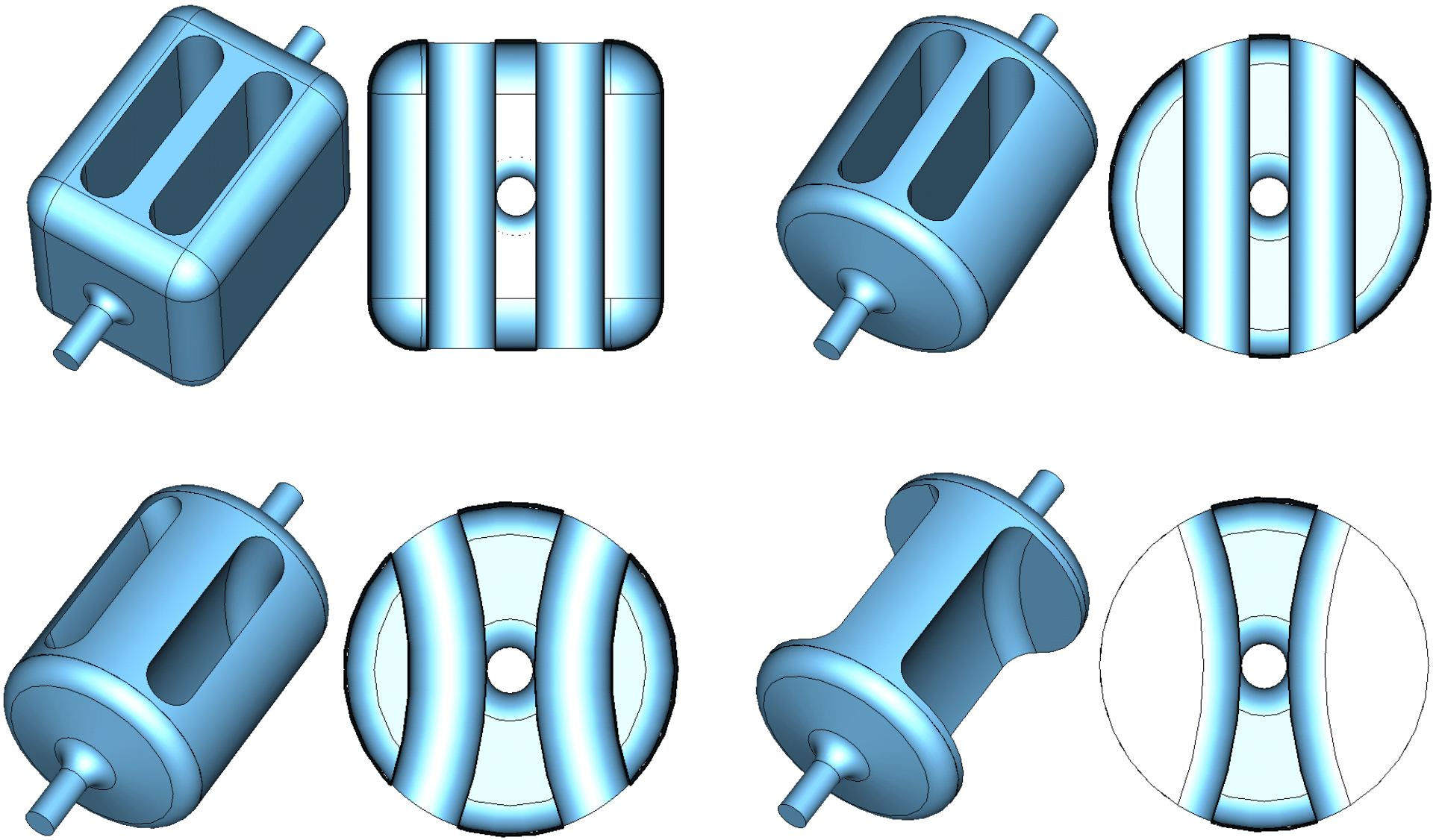

Properties of 499 MHz Designs

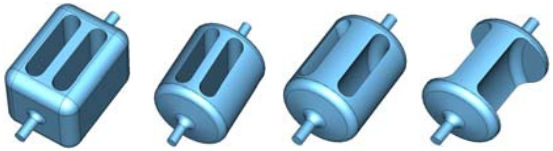

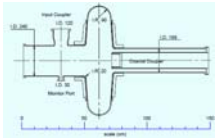

Parameter	(A) Fig. 1	(B) Fig. 3	(C) Fig. 3	(D) Fig. 3	KEK Cavity[2]	Units
Frequency of π mode	499.2	499.0	499.0	499.0	508.9	MHz
λ/2 of π mode	300.4	300.4	300.4	300.4	294.8	mm
Frequency of 0 mode	517.8	622.8	794.0	911.5	-	MHz
Frequency of near neighbour mode	517.8	622.8	736.0	753.1	410.0	MHz
Frequency of lower order mode	-	-	-	-	410.0	MHz
Cavity length	394.4	345.0	345.0	345.0	299.8	mm
Cavity diameter / width	290.0	319.9	281.2	285.2	866.0	mm
Cavity height	304.8	-	-	-	483.0	mm
Bars width at waist	67.0	65.0	65.0	65.0	-	mm
Bars length	284.0	275.0	275.0	275.0	-	mm
Bars height / curved height	304.8	300.0	272.7	275.9	-	
Aperture diameter	40.0	40.0	40.0	40.0	130.0	mm
Deflecting voltage (V_T^*)	0.3	0.3	0.3	0.3	0.3	MV
Peak electric field (E_P^*)	1.85	2.03	2.4	2.63	4.24	MV/m
Peak magnetic field (B_P^*)	6.69	6.33	5.6	5.72	12.23	mT
B_P^* / E_P^*	3.62	3.11	2.31	2.18	2.88	mT/(MV/m)
Energy content (U^*)	0.031	0.033	0.034	0.039	-	J
Geometrical factor	67.96	63.98	83.2	85.5	220	Ω
$[R/Q]_T$	933.98	875.7	839.5	735.6	46.7	Ω
$R_T R_S$	6.3×10^4	5.6×10^4	7.0×10^4	6.3×10^4	1.03×10^4	Ω^2

At $E_T^* = 1$ MV/m

HOM Properties of 499 MHz Designs

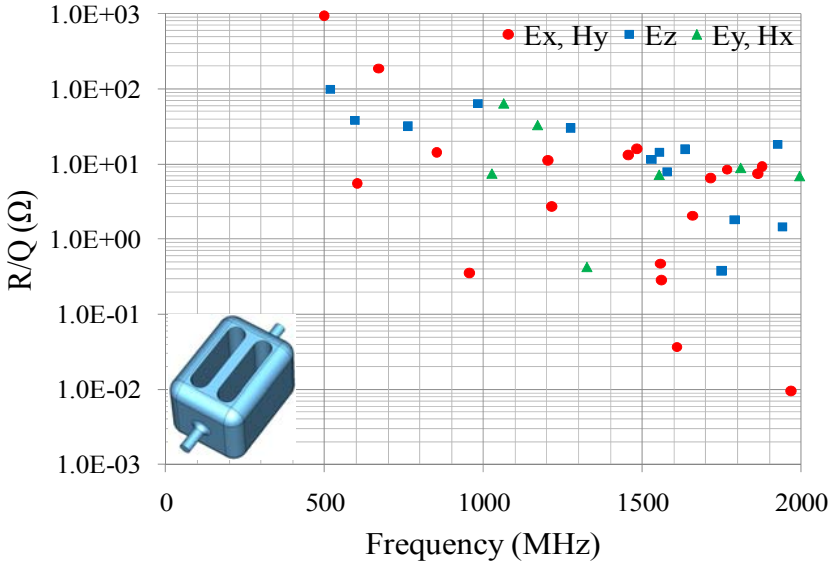

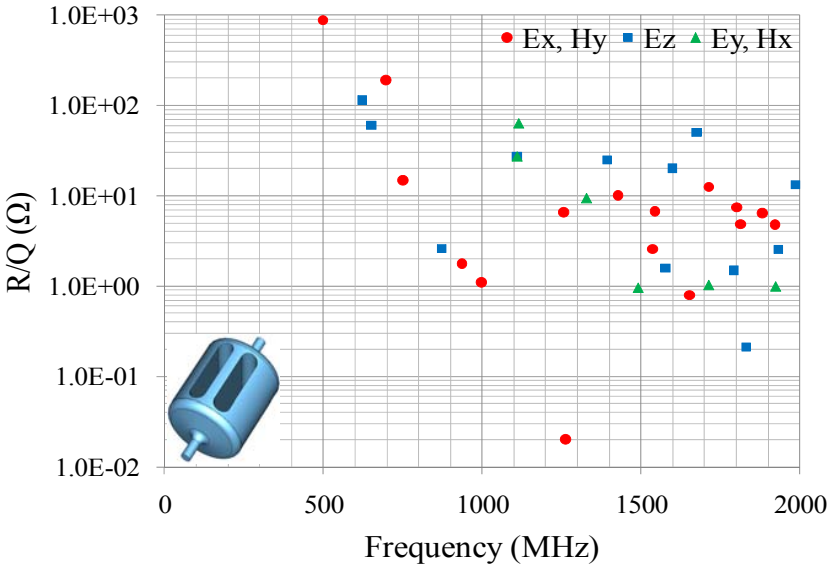

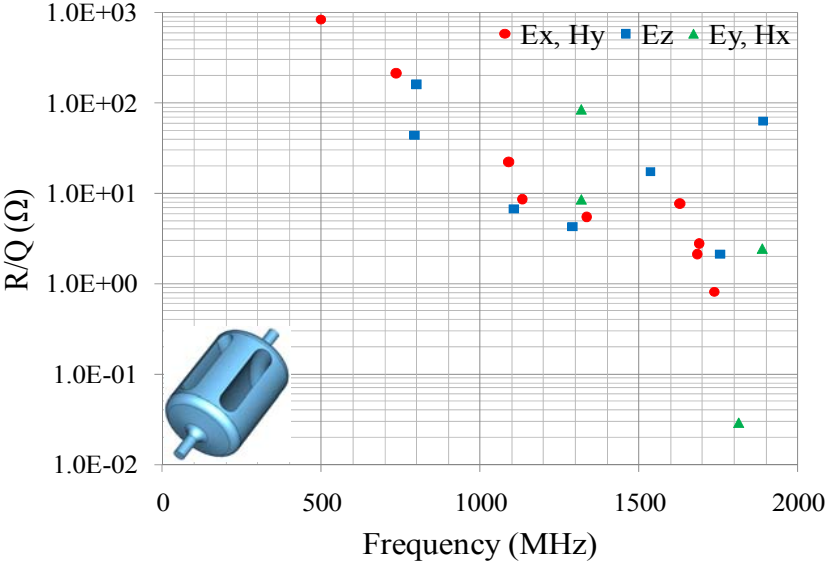

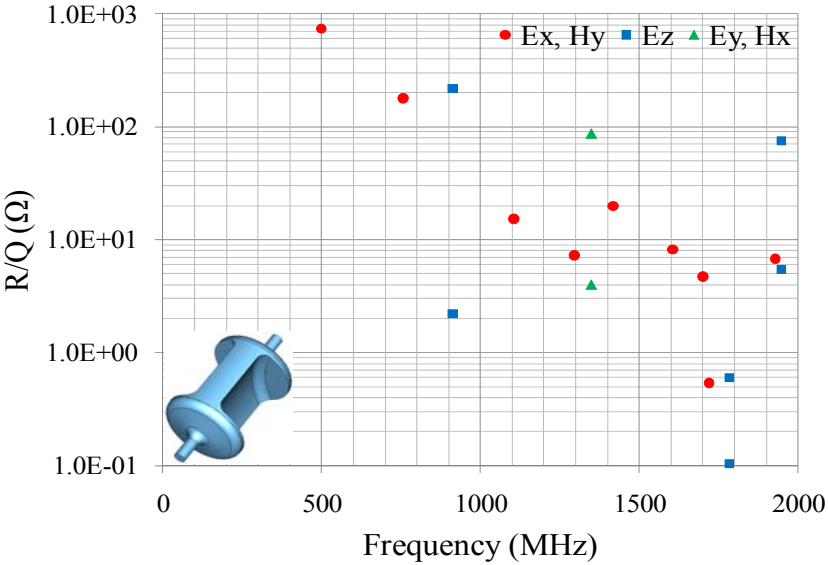

Off Axis Nonlinearities

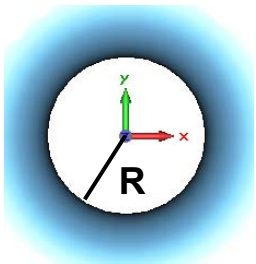

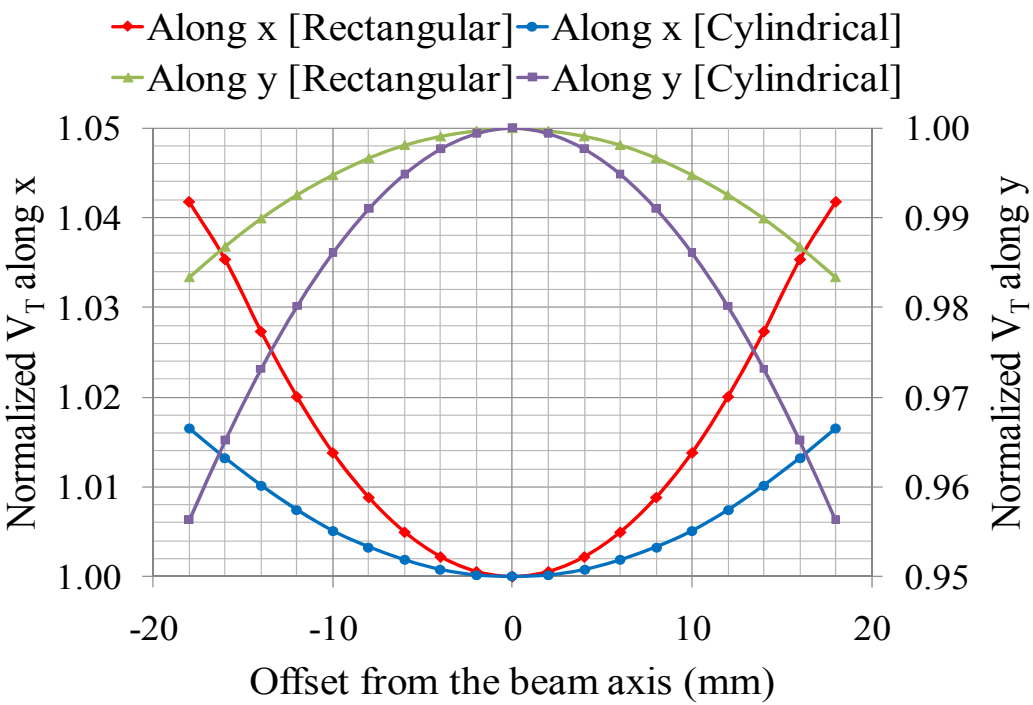

499 MHz Mechanical Study – Stress Analysis

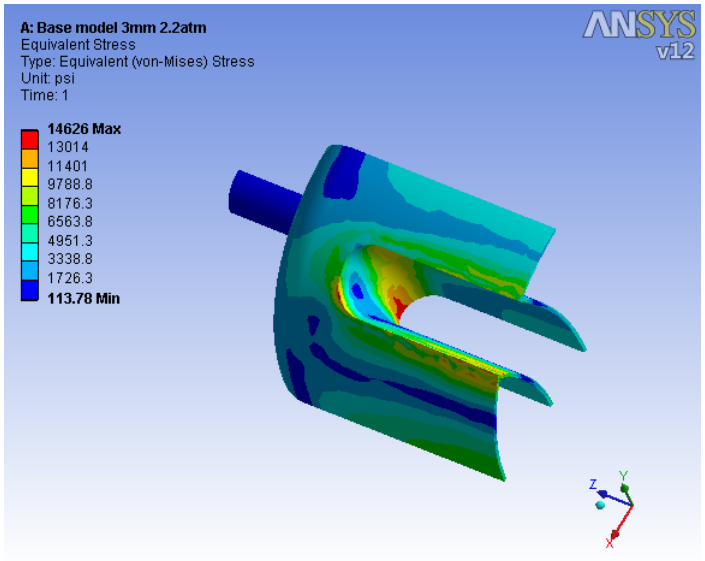

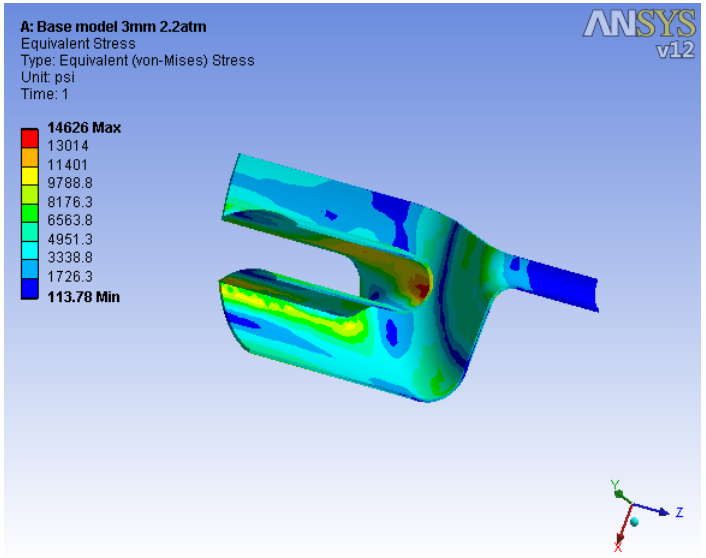

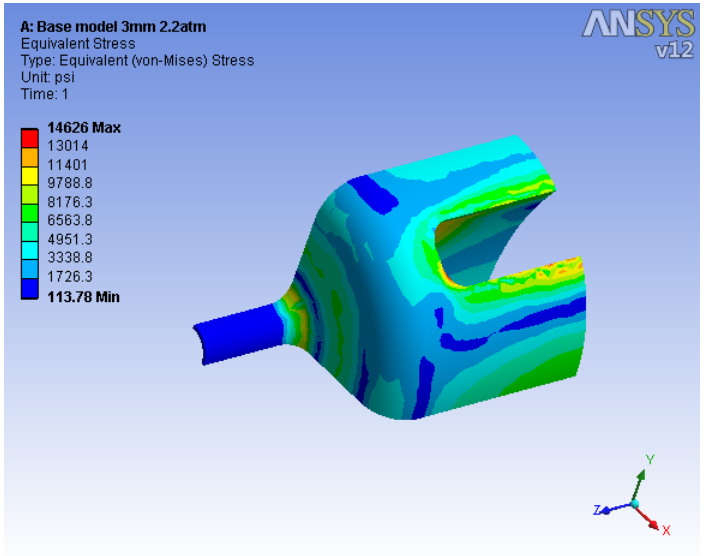

Base model

- **3mm thickness Niobium**
- **room temperature**
- **2.2 atm absolute pressure**

The model shows above 10000 psi in the cylindrical body

499 MHz Mechanical Study – Stress Analysis

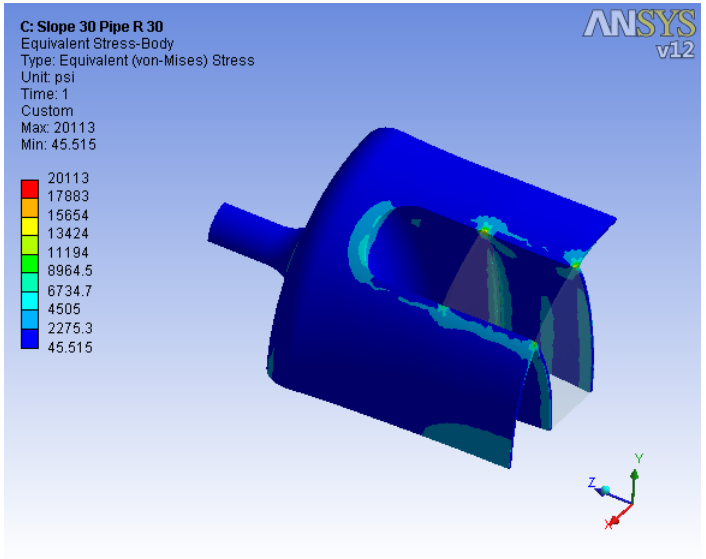

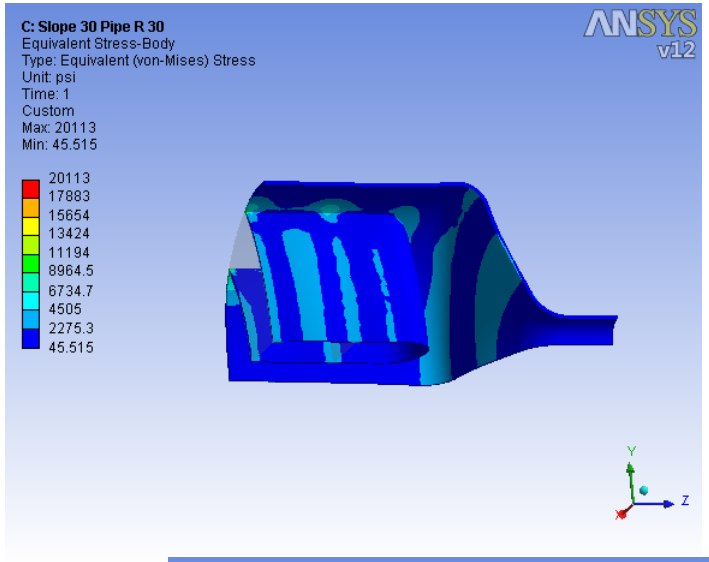

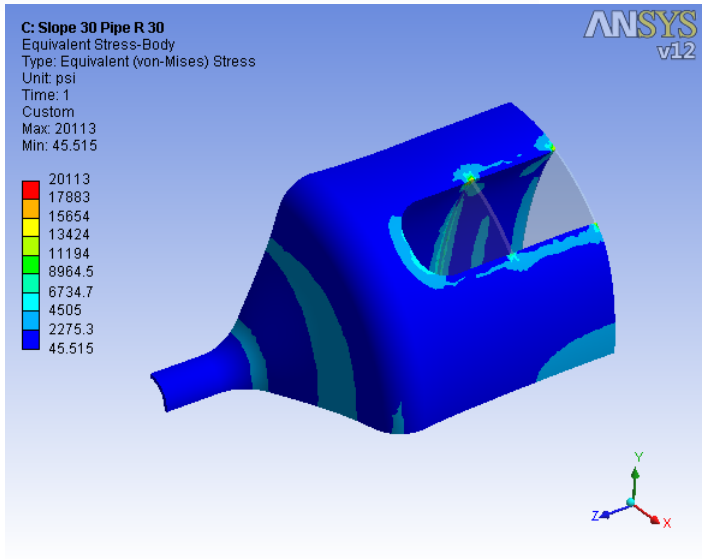

- **The cavity has formed head instead of flat heads**
- **Three reinforcing ribs are added**
- **The stress in main body decreased below 7000 psi**
- **The local high stress was developed at the body and rib joint**
- **These local area will be yielded but it does not greatly affect the cavity shape. (confirm this statement please)**

499 MHz Mechanical Study
Stress and Deformation Analysis

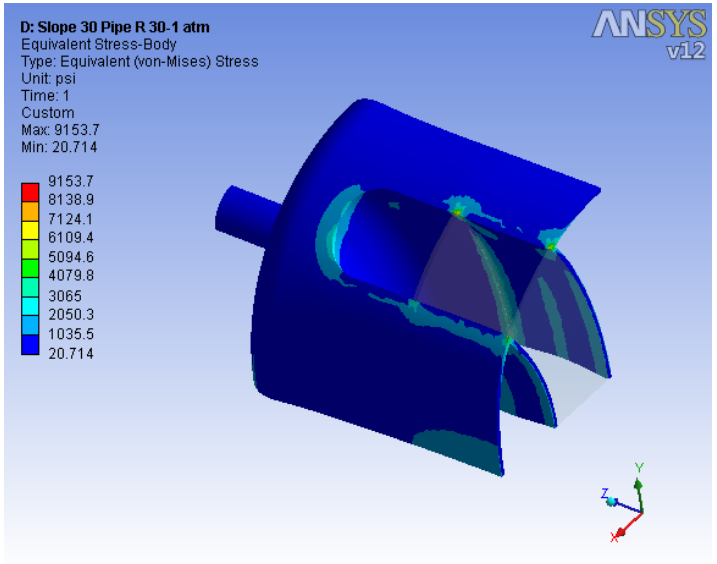

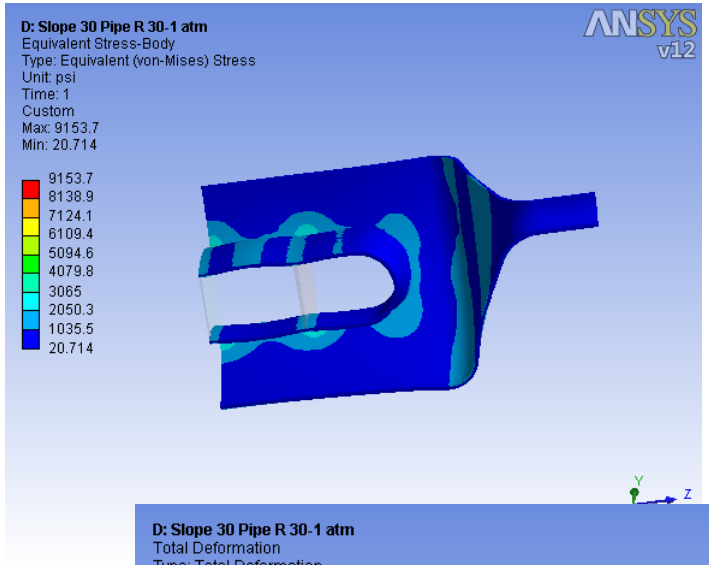

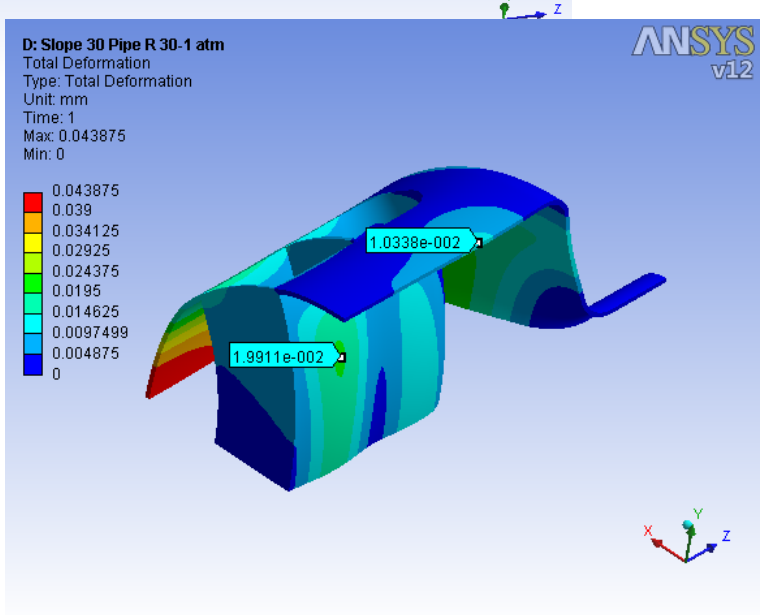

- **Stress under 1 atm (14.7 psi) absolute pressure**
- **After the cool down the cavity will be under less than 1 atm pressure**
- **Again there is the same area showing above 7000 psi but it's limited local where it does not affect much on RF characteristics**
- **Deformation due to the external pressure 1 atm**
- **This deformed model will be (should be) RF studied**

Fabrication Process – 499 MHz Prototype

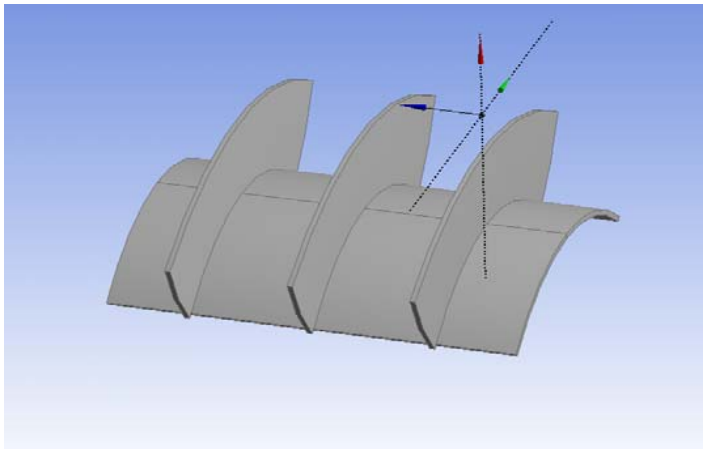

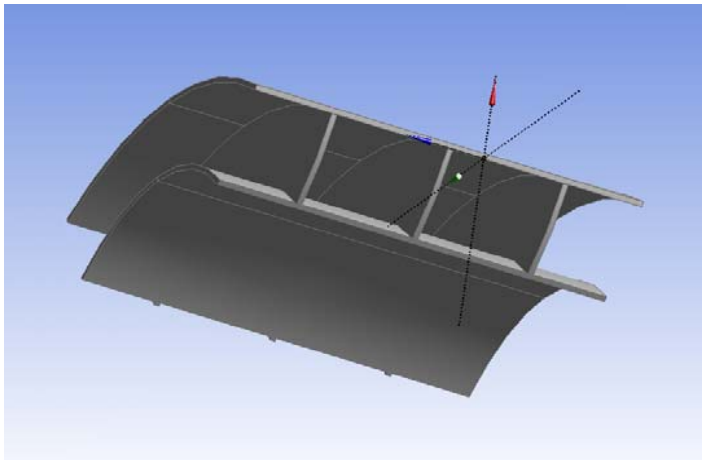

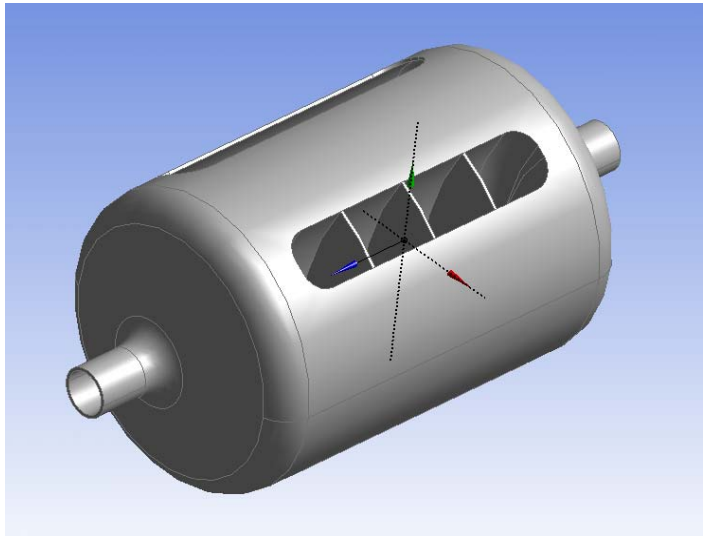

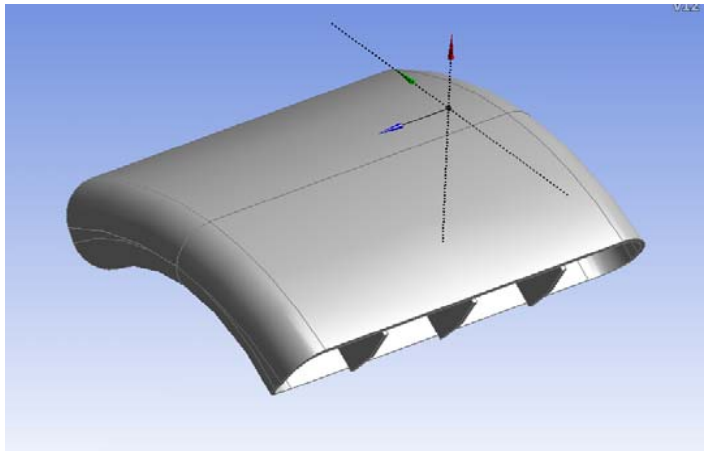

Multipacting Analysis

- Analyzed using Track3P in ACE-3P code suite from SLAC

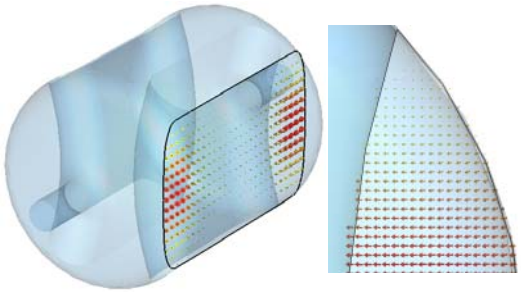

Electric field

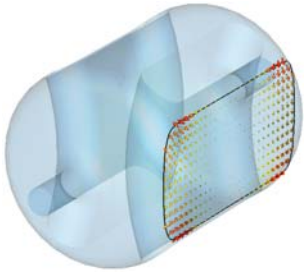

Magnetic field

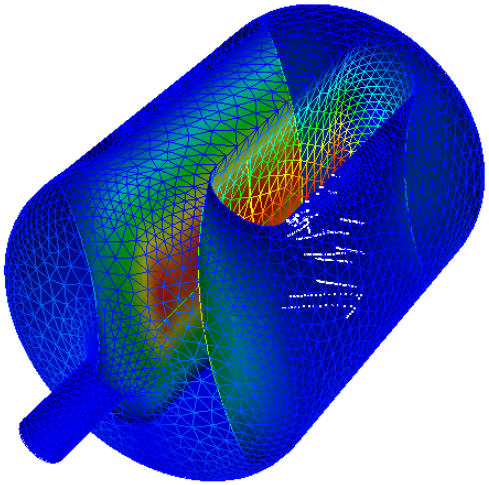

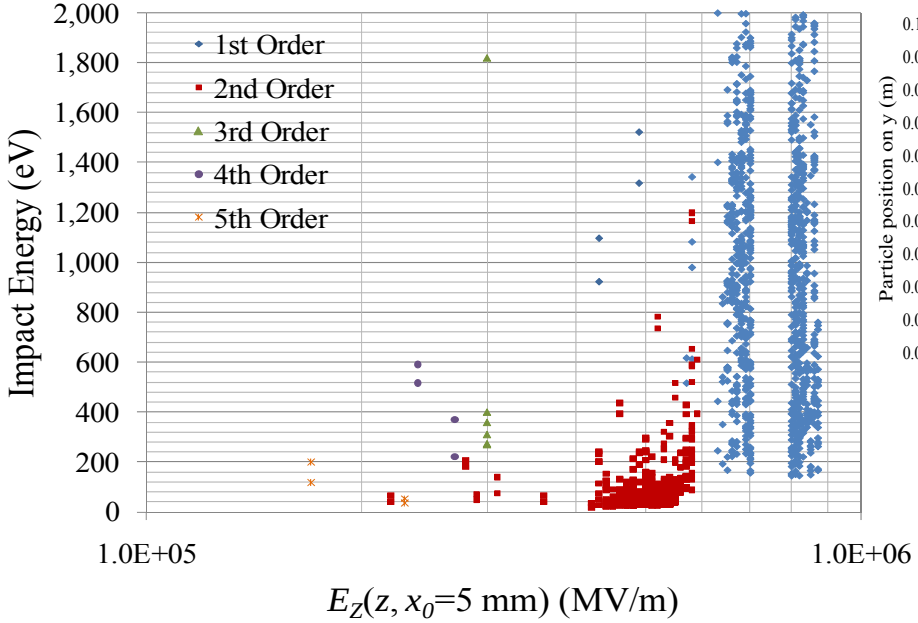

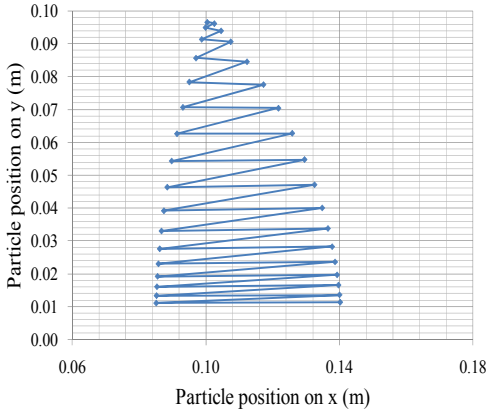

Single Particle Trajectory

- Resonant particles were analyzed over 50 rf cycles for the 499 MHz cylindrical parallel-bar cavity
- At higher rf cycles very few resonant trajectories exist
- The design with bars merged on to the walls eliminates this multipacting condition

Multipacting Analysis

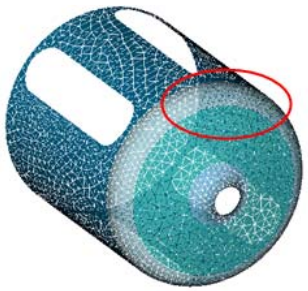

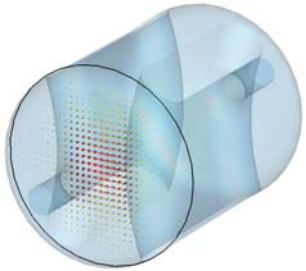

Electric field

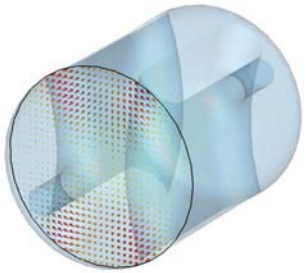

Magnetic field

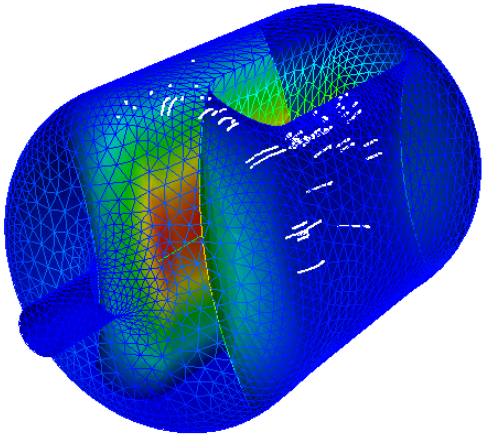

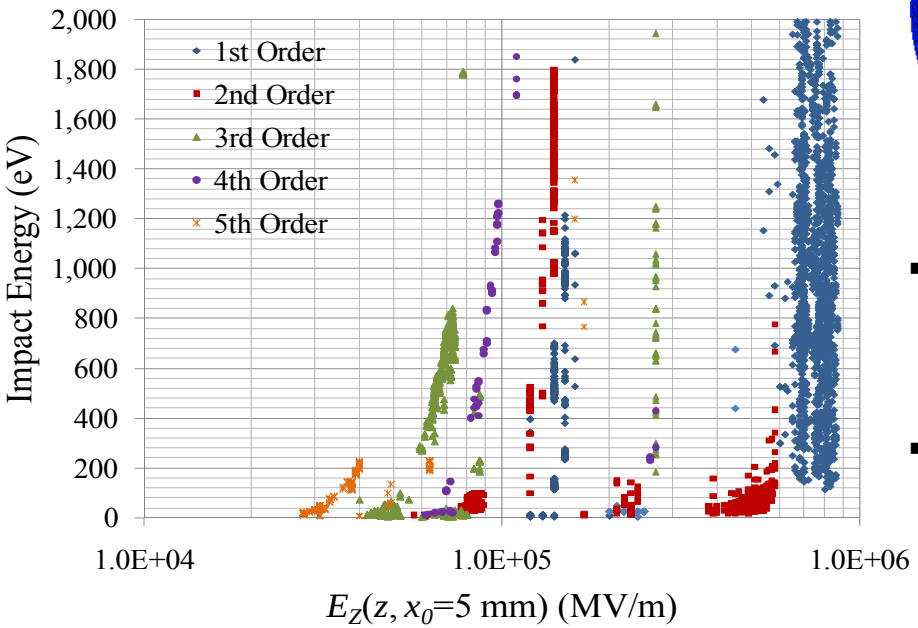

- Higher orders of multipacting exist at lower gradients
- At very high gradients there were considerably large amount of resonant particles of 1st order

Secondary particles had very low impact energies

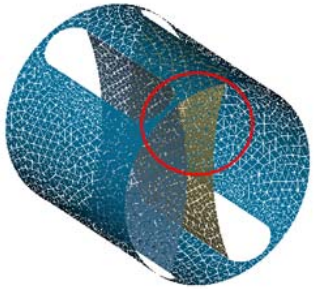

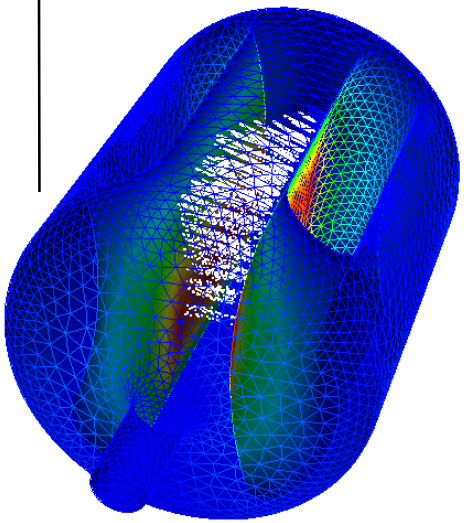

400 MHz Elliptical Parallel-Bar Cavity

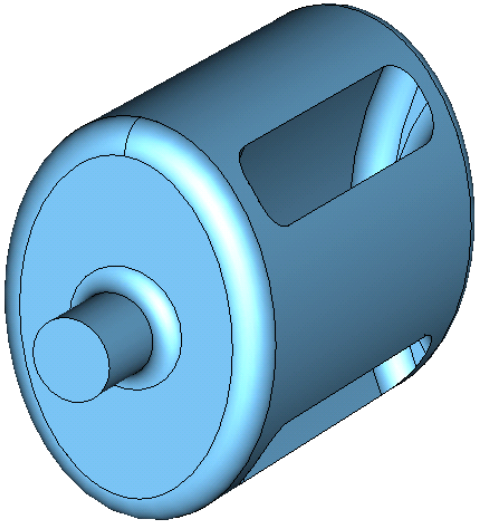

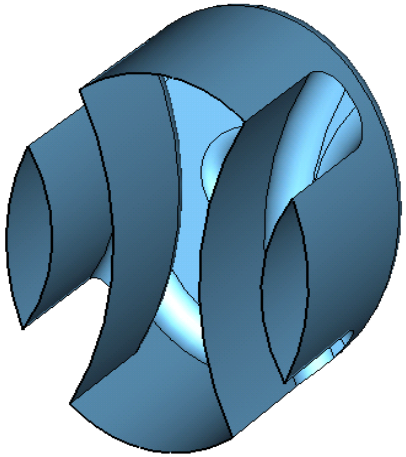

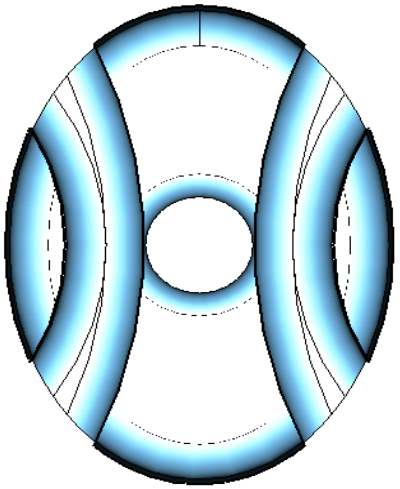

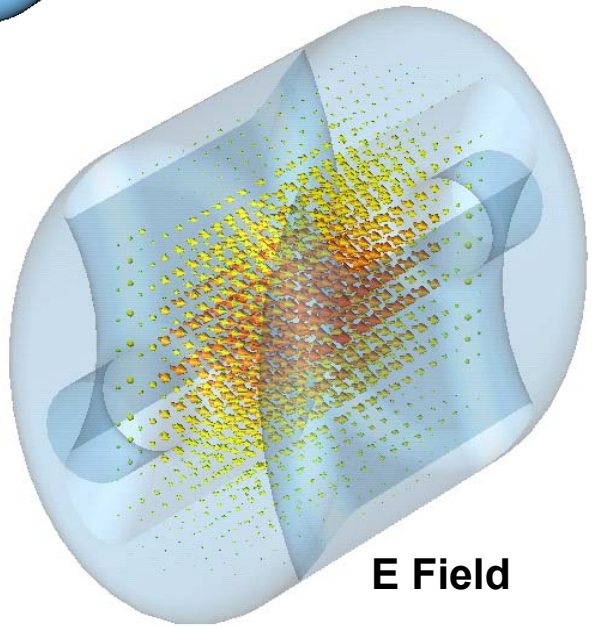

E Field

400 MHz

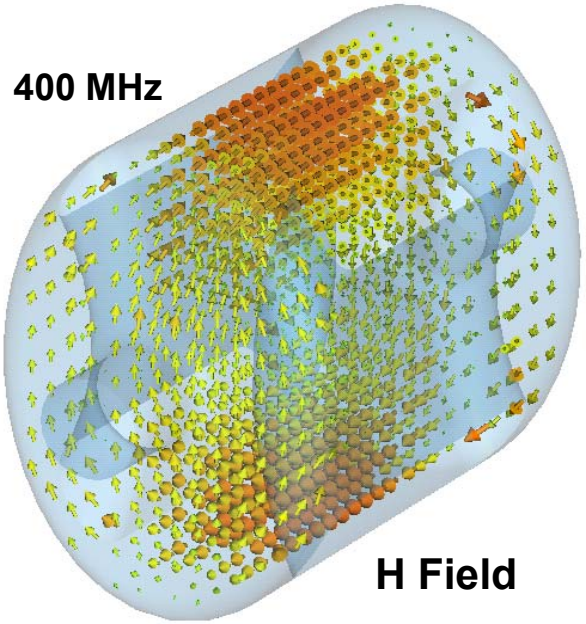

H Field

Cavity Properties – Elliptical Design

Parameter	Rectangular Shaped	Elliptical Shaped	Unit
Frequency of π mode	400.0	400.0	MHz
λ/2 of π mode	374.7	374.7	mm
Frequency of 0 mode	411.0	687.0	MHz
Nearest mode to π mode	411.0	611.6	MHz
Cavity reference length	444.7	445.0	mm
Cavity width / diameter	300.0	290.0	mm
Cavity height	383.2	408.6	mm
Bars length	330.0	330.0	mm
Bars width	55.0	60.0	mm
Aperture diameter	84.0	84.0	mm
Deflecting voltage (V_T^*)	0.375	0.375	MV
Peak electric field (E_P^*)	2.2	3.4	MV/m
Peak magnetic field (B_P^*)	7.9	7.71	mT
B_P^* / E_P^*	3.6	2.27	mT / (MV/m)
Geometrical factor ($G = QR_S$)	74.1	109.4	Ω
$[R/Q]_T$	413.34	255.68	Ω
$R_T R_S$	3.1×10^4	2.8×10^4	Ω^2
At E_T^* = 1 MV/m			

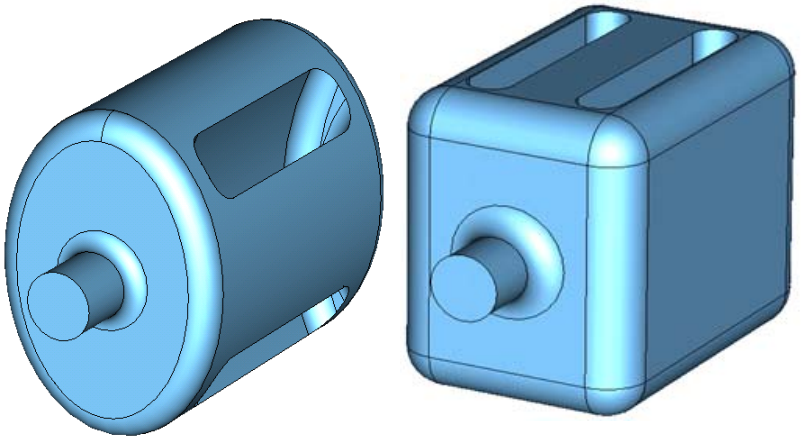

- Frequency separation of the first two modes ~ 211 MHz compared to 11 MHz in the rectangular design
- Reduced cavity width to meet the LHC crab cavity specifications

Higher Order Modes – 400 MHz

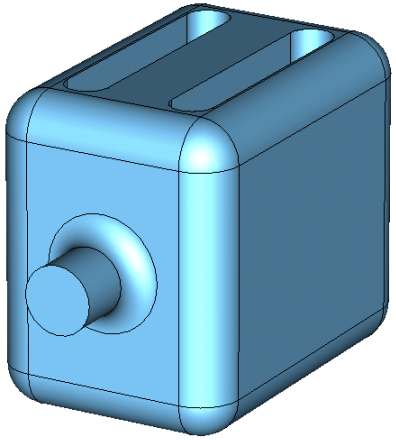

Fewer low frequency modes compared to the rectangular design with larger separation of modes

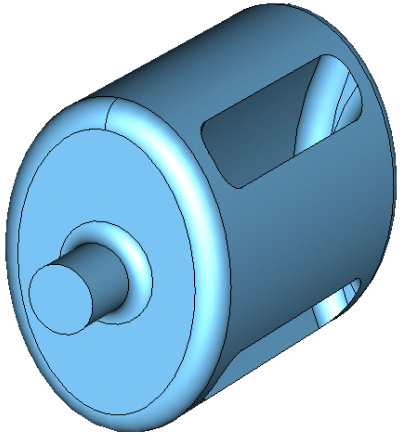

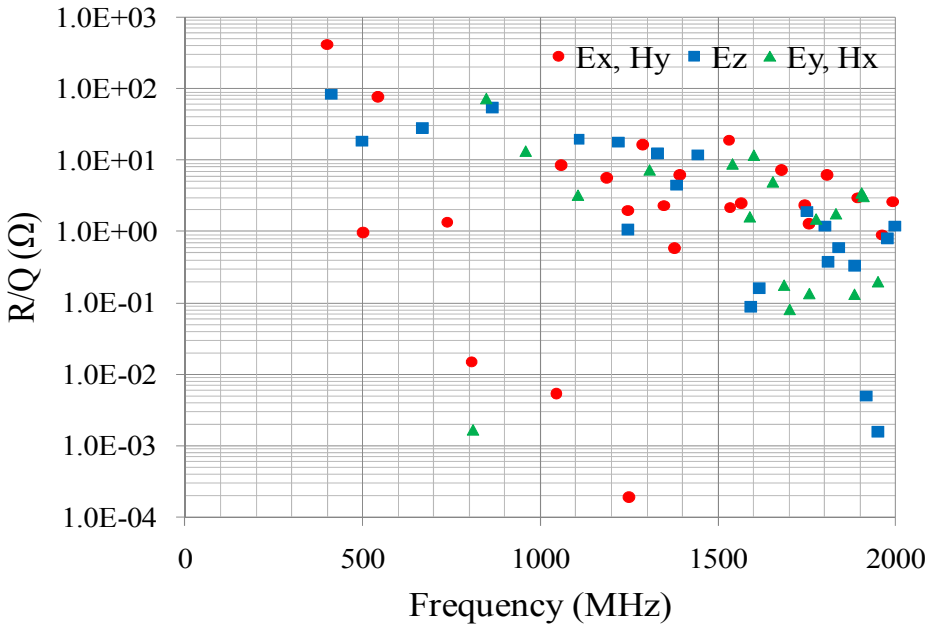

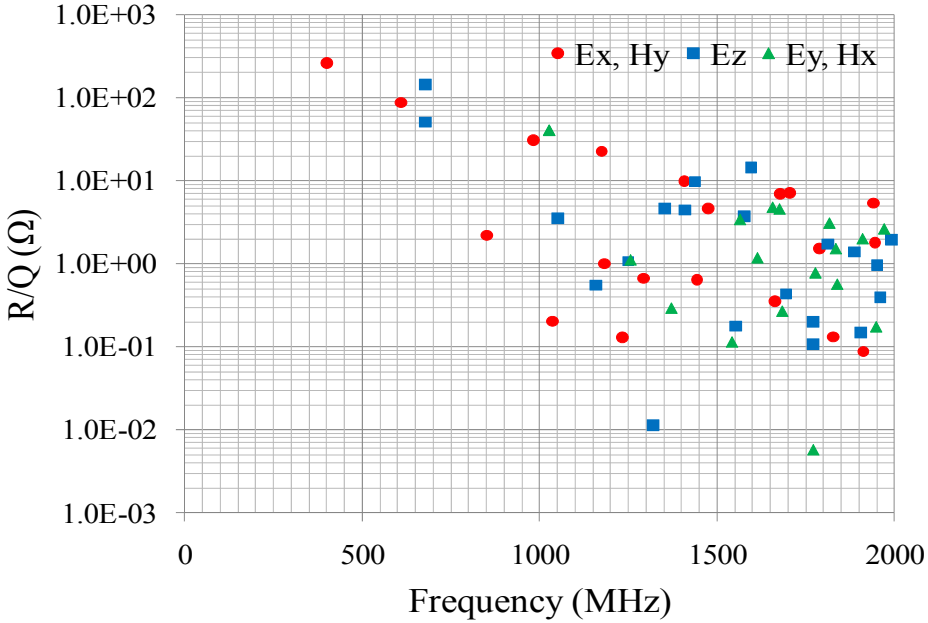

400 MHz LHC Crab Cavity
Present design

NIOWAVE
www.niowaveinc.com

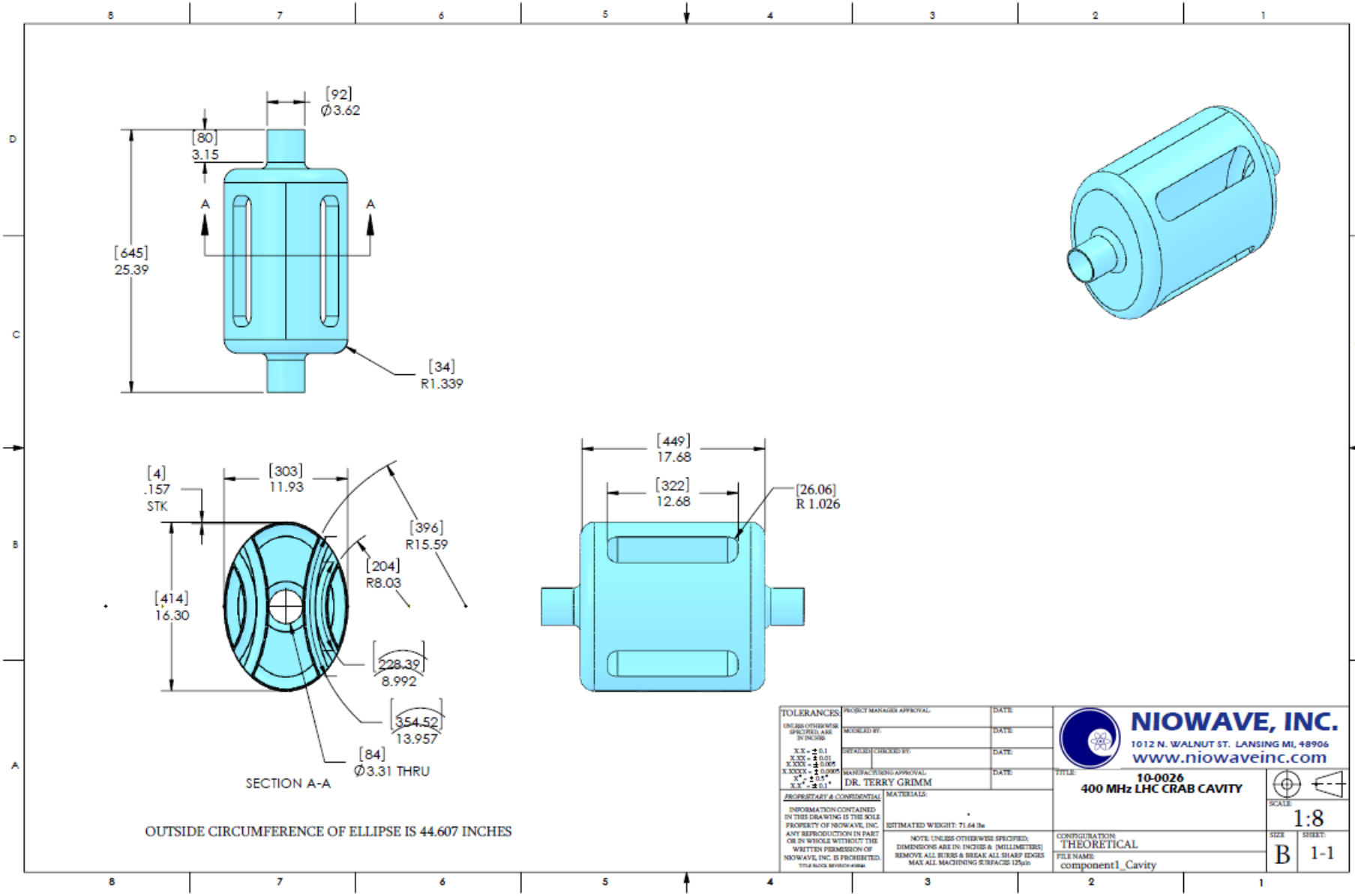

400 MHz LHC Crab Cavity
800 MHz Aluminum model

NIOWAVE
www.niowaveinc.com

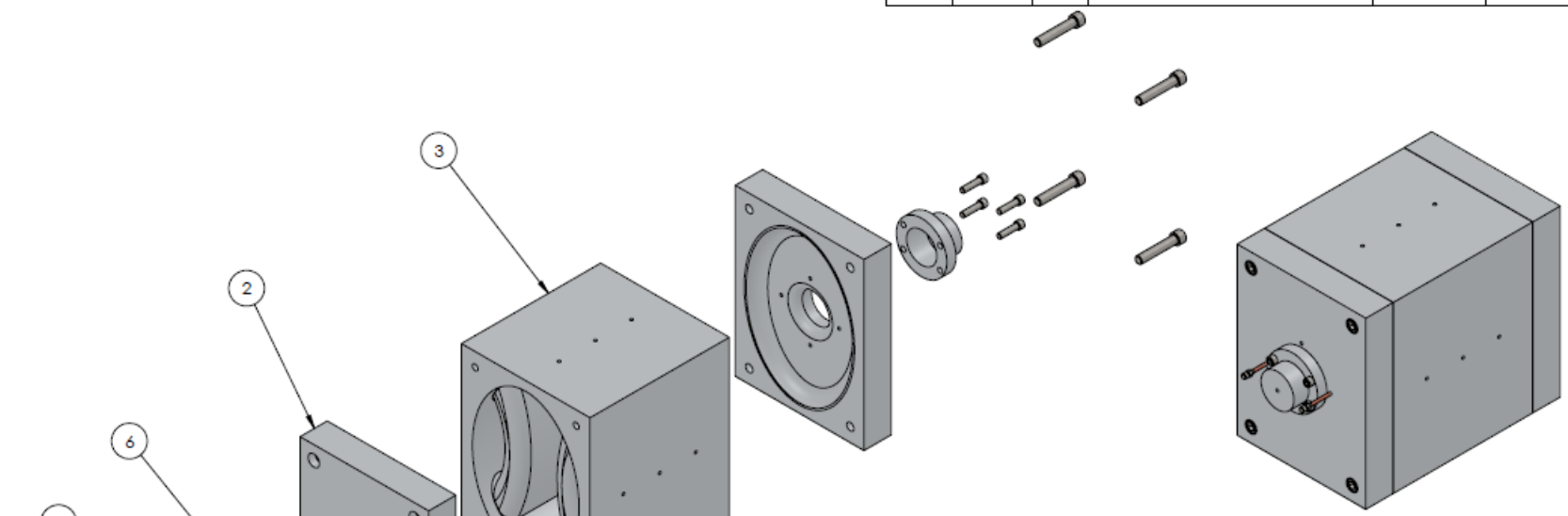

REVISIONS					
ZONE	ECN #	REV.	DESCRIPTION	APPROVED	DATE
ALL	1	1.1	ADDED PARTS 4, 5, AND 6	DG	10/27/10
B7, C4	2	1.2	ADDED PART 10-0026-T000-A01	DG	11/24/2010

PART NUMBER	DESCRIPTION	MATERIAL	QTY.
6	10-0026-T001-P04	BOSS	6061 Alloy	2
5	1/4-28 x 1 x 1	SOCKET HEAD CAP SCREW	STAINLESS STEEL	8
4	2inAntennaSmallPlug			2
3	10-0026-T001-P02	PROTOTYPE CAVITY CENTER	6061 Alloy	1
2	10-0026-T001-P01	PROTOTYPE CAVITY END PLATE	6061 Alloy	2
1	3/8-16 x 2 x 1.5	SOCKET HEAD CAP SCREW	STAINLESS STEEL	8

TOLERANCES: UNLESS OTHERWISE SPECIFIED, ARE IN INCHES
X.X = ± 0.1
X.XX = ± 0.01
X.XXX = ± 0.005
X.XXXX = ± 0.0005
X° = ± 0.5°
X.X° = ± 0.1°

PROJECT MANAGER APPROVAL: BEN SIEGEL — DATE: 9/29/2010
MODELED BY: NICK MILLER — DATE: 9/29/2010
DETAILED BY: BLK — CHECKED BY: NICK MILLER — DATE: 9/29/2010
MANUFACTURING APPROVAL: DR. TERRY GRIMM — DATE: 9/29/2010

PROPRIETARY & CONFIDENTIAL
INFORMATION CONTAINED IN THIS DRAWING IS THE SOLE PROPERTY OF NIOWAVE, INC. ANY REPRODUCTION IN PART OR IN WHOLE WITHOUT THE WRITTEN PERMISSION OF NIOWAVE, INC. IS PROHIBITED.
TITLE BLOCK REVISION 4/28/08

MATERIALS:
ESTIMATED WEIGHT: 43.66 lbs

NOTE: UNLESS OTHERWISE SPECIFIED:
DIMENSIONS ARE IN: INCHES & [MILLIMETERS]
REMOVE ALL BURRS & BREAK ALL SHARP EDGES
MAX ALL MACHINING SURFACES 125µin

NIOWAVE, INC.
1012 N. WALNUT ST. LANSING MI, 48906
www.niowaveinc.com

TITLE:
JLAB/ ODU
400MHz LHC CRAB CAVITY
ALUMINUM 800MHz
PROTOTYPE

CONFIGURATION: TEST BOSS
FILE NAME: 10-0026-T000-A01

SCALE: 1:4
SIZE: B
SHEET: 1-1

400 MHz LHC Crab Cavity
800 MHz Aluminum model

NIOWAVE
www.niowaveinc.com

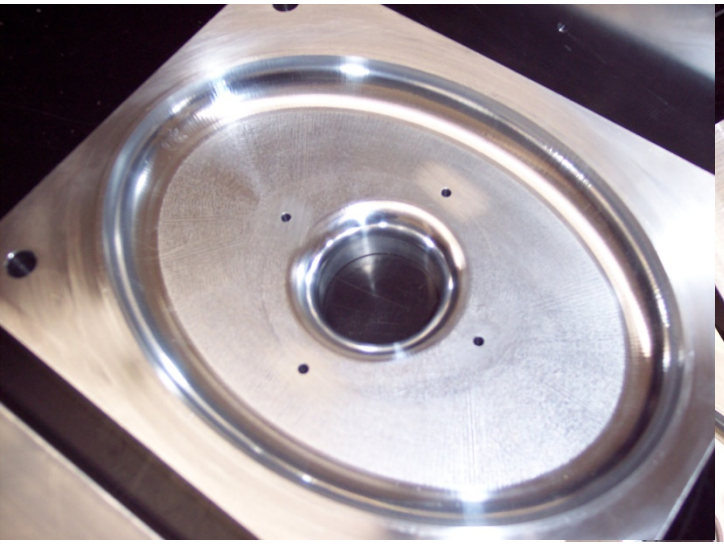
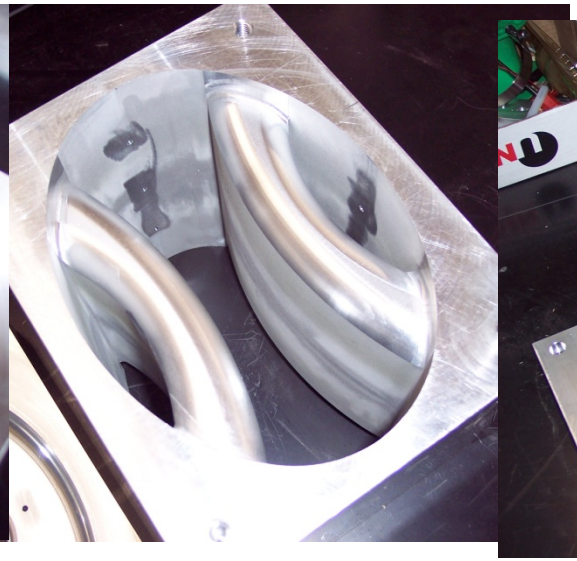

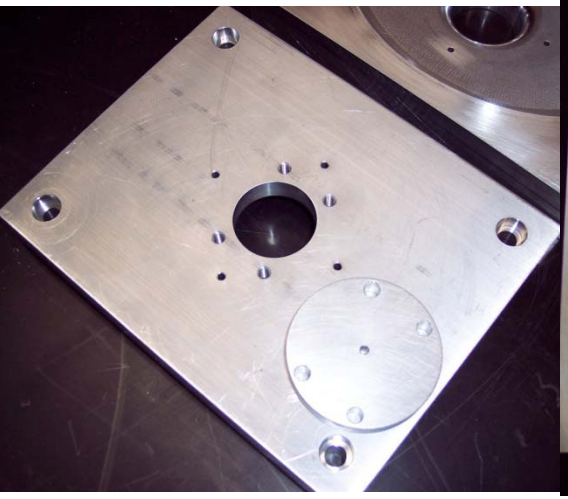
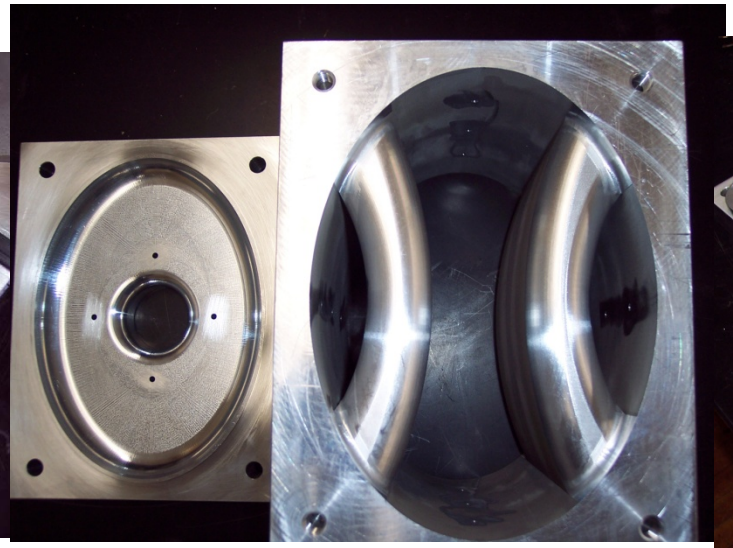
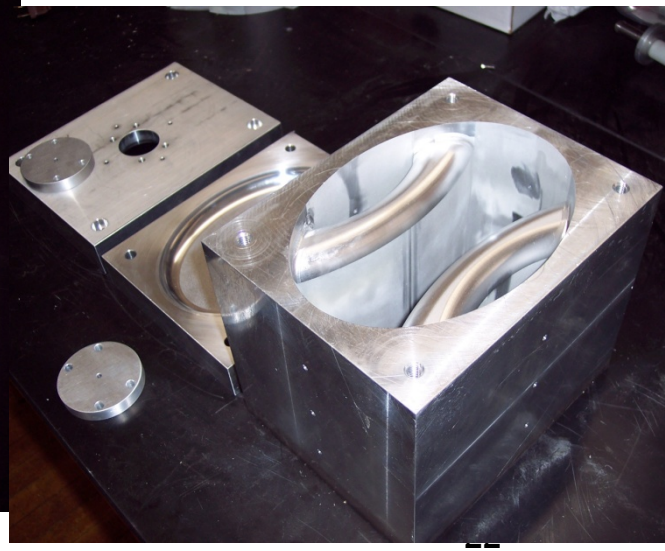

400 MHz LHC Crab Cavity
800 MHz Aluminum model

NIOWAVE
www.niowaveinc.com

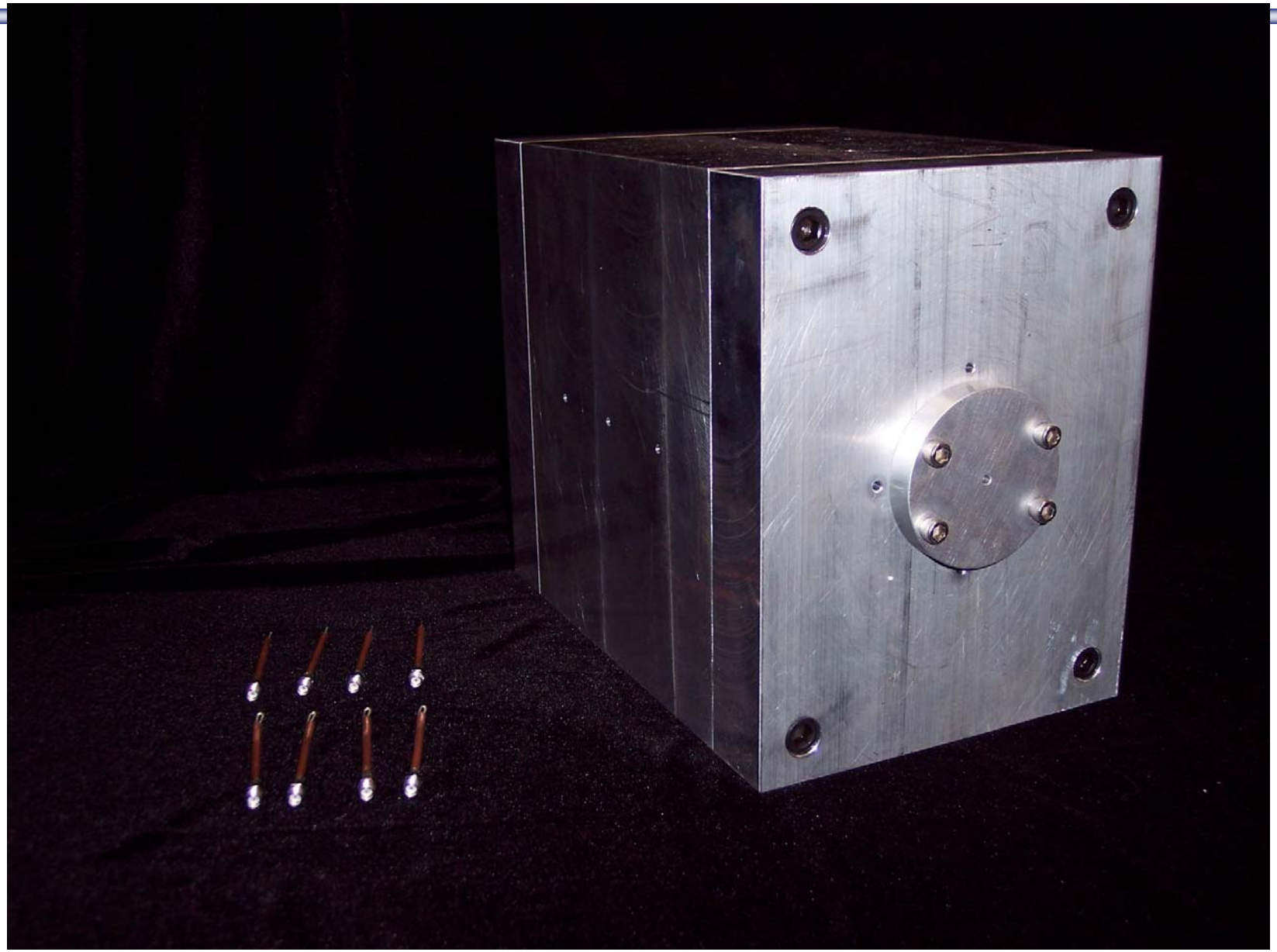

Shunt Impedance – 400 MHz

- Longitudinal Impedance: $Z_Z = \left[\frac{R}{Q}\right] Q_{ext,n}$
- Transverse Impedance: $Z_T = \frac{\omega}{c}\left[\frac{R}{Q}\right]_T Q_{ext,n}$

*** Longitudinal Impedance: 20 kΩ**

*** Transverse Impedance: 0.4 MΩ/m**

*** E. Shaposhnikova – LHC-CC10**

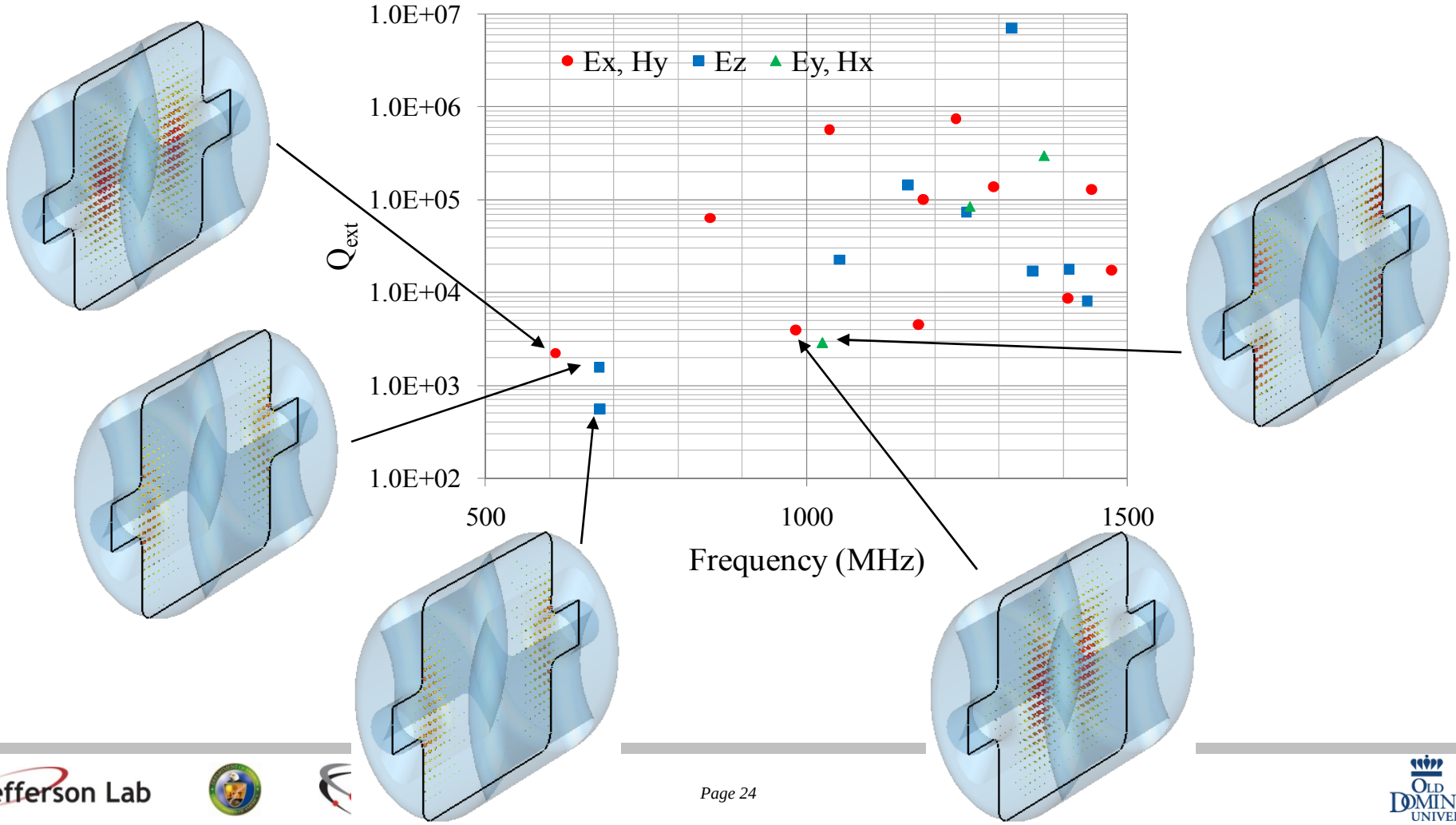

HOM Coupler Designs – 400 MHz

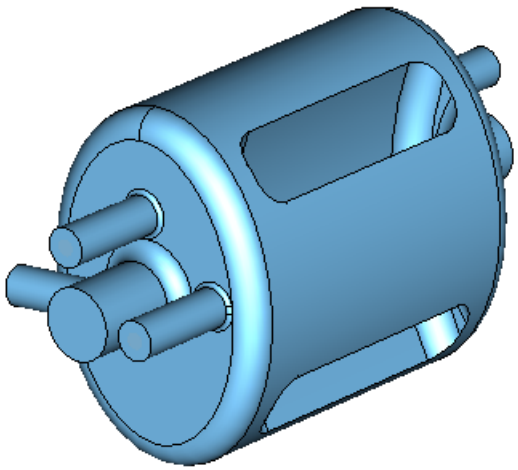

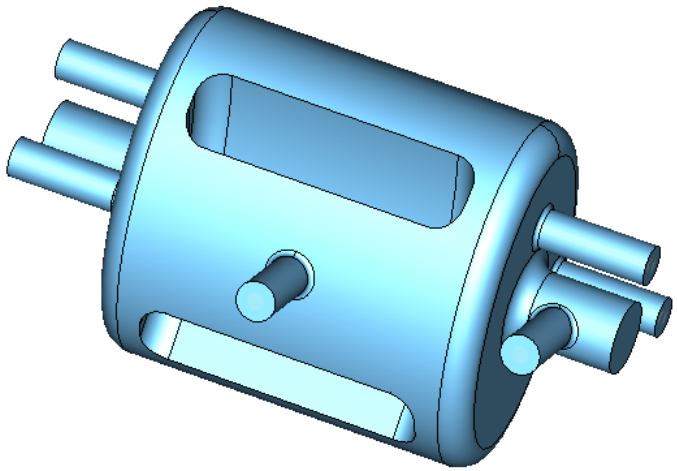

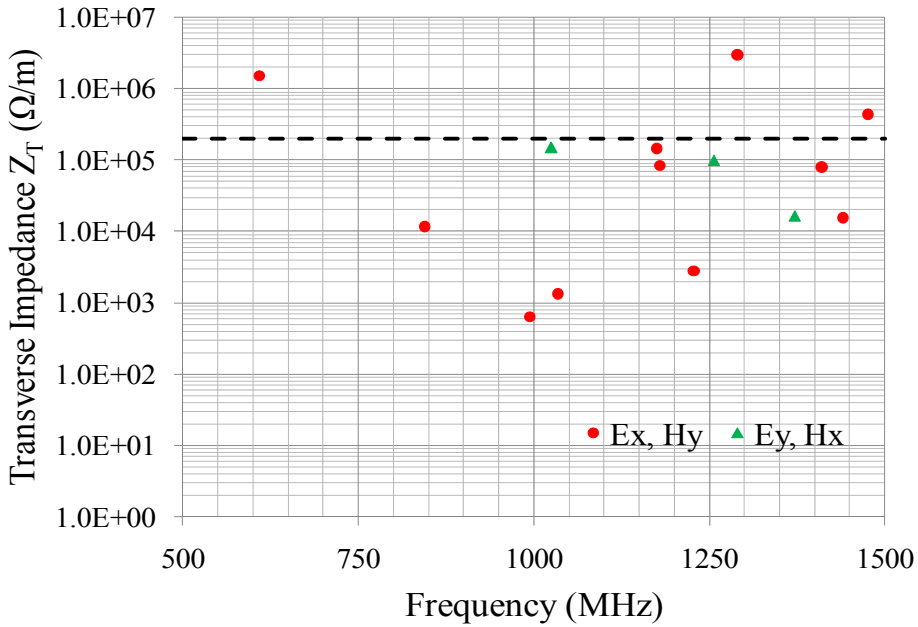

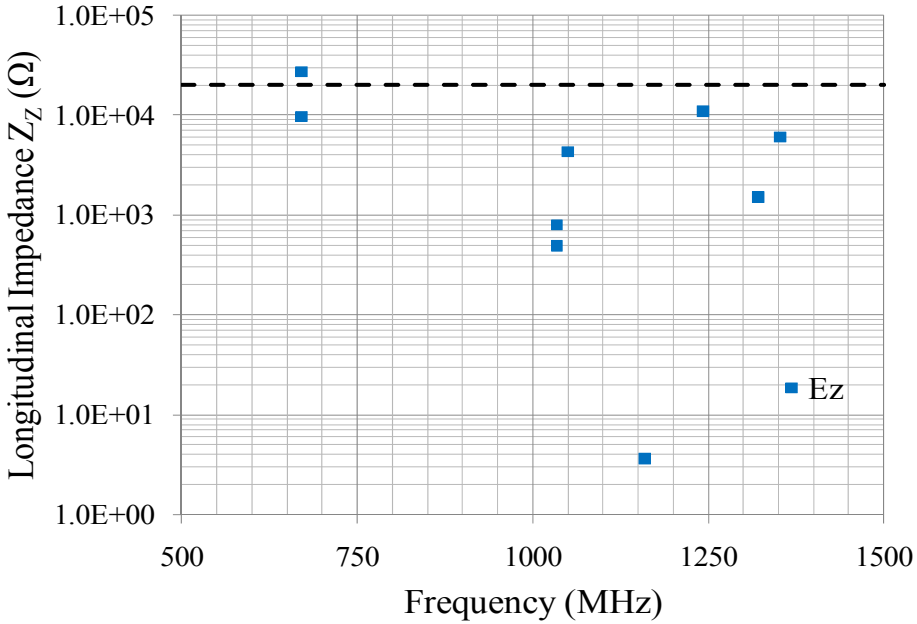

Cylindrical Parallel-Bar Cavity Designs for Horizontal and Vertical Crabbing

Cylindrical Parallel-Bar Cavity with Curved Bars

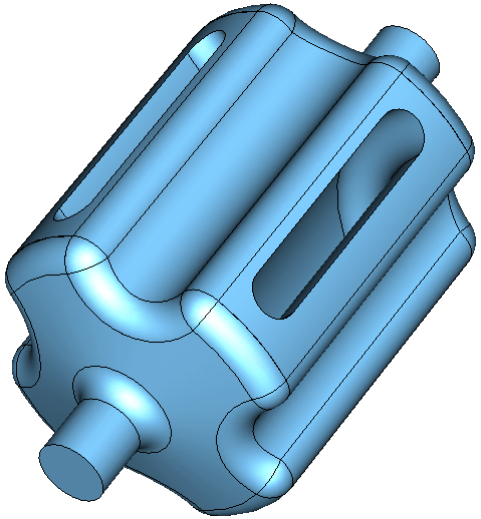

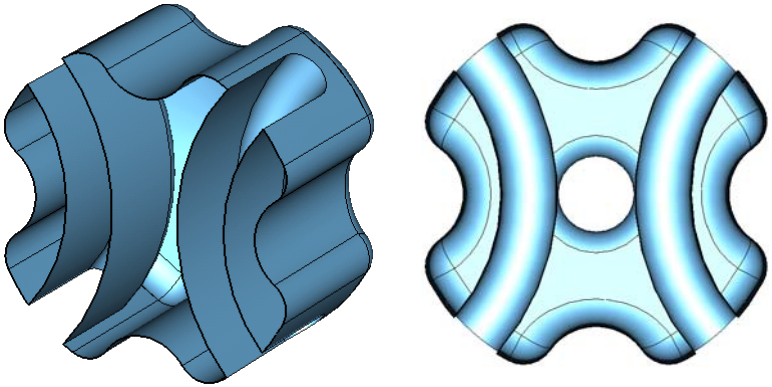

Cylindrical Parallel-Bar Cavity with Trapezoidal Shaped Bars

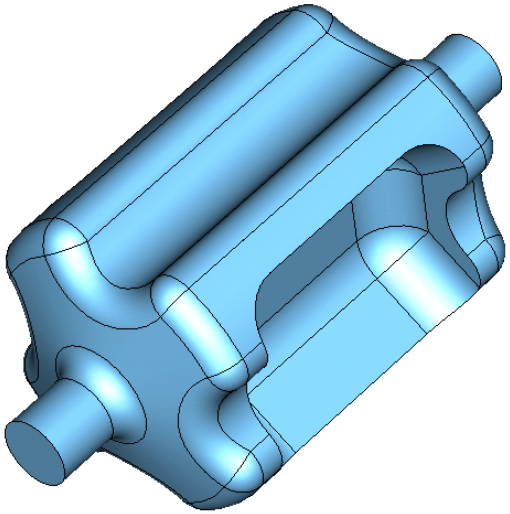

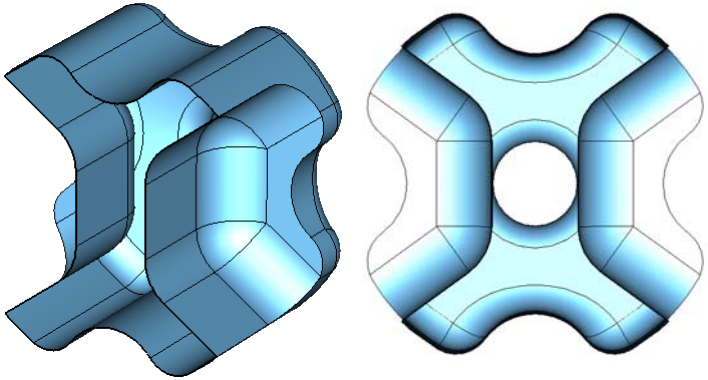

Cylindrical Parallel-Bar Cavity Designs for Horizontal and Vertical Crabbing

Cylindrical Parallel-Bar Cavity with Curved Bars

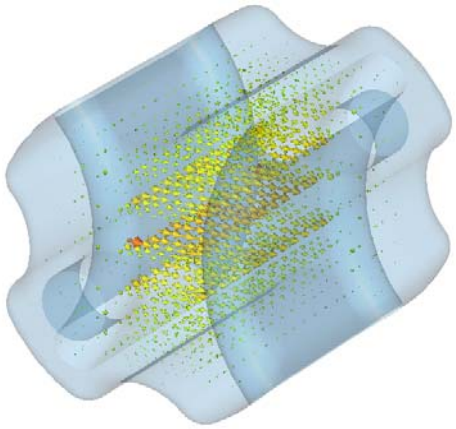

E Field

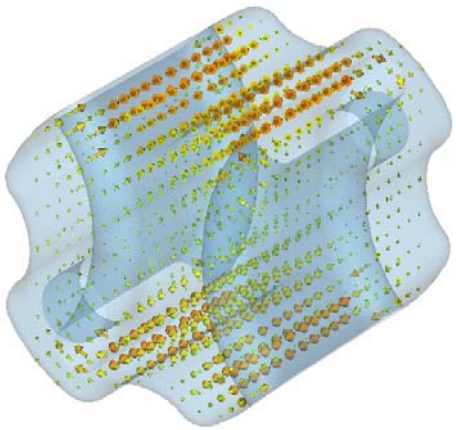

H Field

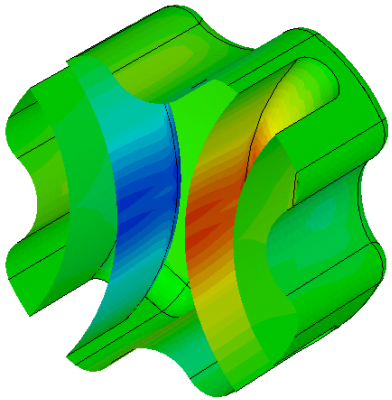

Surface E Field

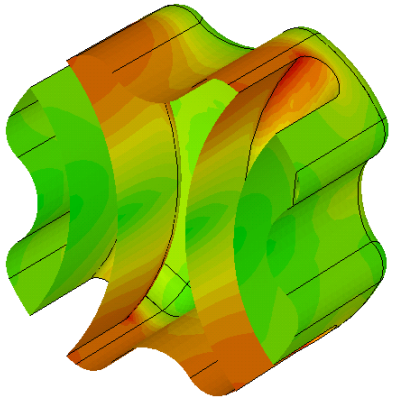

Surface H Field

Cylindrical Parallel-Bar Cavity with Trapezoidal Shaped Bars

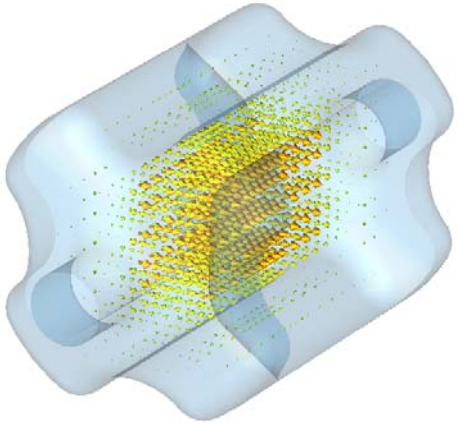

E Field

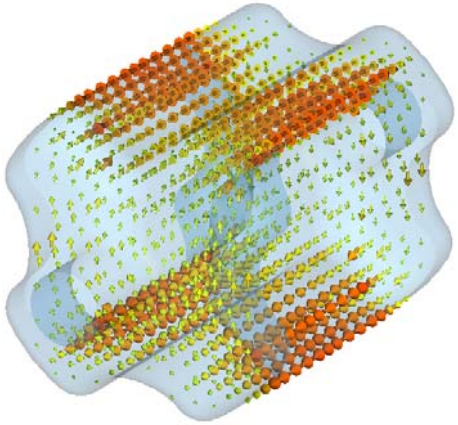

H Field

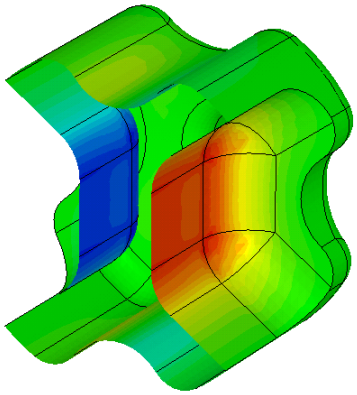

Surface E Field

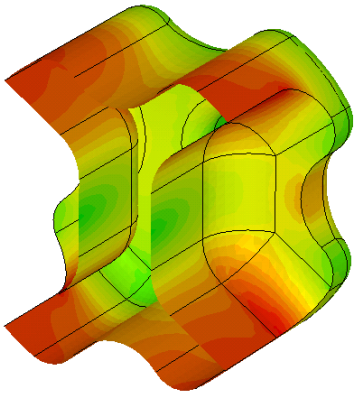

Surface H Field

Cavity Properties – 400 MHz Designs

Parameter	(A)	(B)	(C)	(D)	Unit
Frequency of π mode	400.0	400.0	400.0	400.0	MHz
λ/2 of π mode	374.7	374.7	374.7	374.7	mm
Frequency of 0 mode	411.0	687.0	541.5	665.9	MHz
Nearest mode to π mode	411.0	611.6	541.5	619.6	MHz
Cavity reference length	444.7	445.0	525.0	525.0	mm
Cavity width / diameter	300.0	290.0	404.5	373.0	mm
Cavity height	383.2	408.6	404.5	373.0	mm
Bars length	330.0	330.0	330.0	330.0	mm
Bars width	55.0	60.0	60.0	-	mm
Aperture diameter	84.0	84.0	84.0	84.0	mm
Deflecting voltage (V_T^*)	0.375	0.375	0.375	0.375	MV
Peak electric field (E_P^*)	2.2	3.4	3.3	3.7	MV/m
Peak magnetic field (B_P^*)	7.9	7.71	8.2	8.3	mT
B_P^* / E_P^*	3.6	2.27	2.45	2.24	mT / (MV/m)
Geometrical factor ($G = QR_S$)	74.1	109.4	81.3	88.4	Ω
$[R/Q]_T$	413.34	255.68	372.83	285.25	Ω
$R_T R_S$	3.1×10^4	2.8×10^4	3.0×10^4	2.5×10^4	Ω^2
At E_T^* = 1 MV/m					

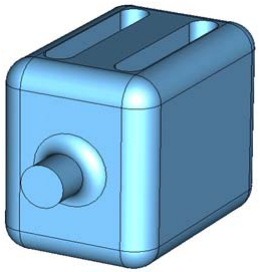
(A)

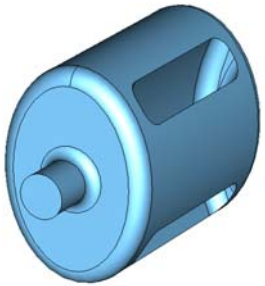
(B)

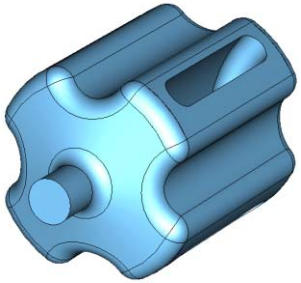
(C)

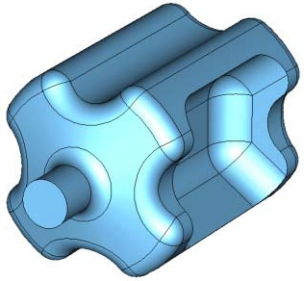
(D)

Higher Order Modes – 400 MHz

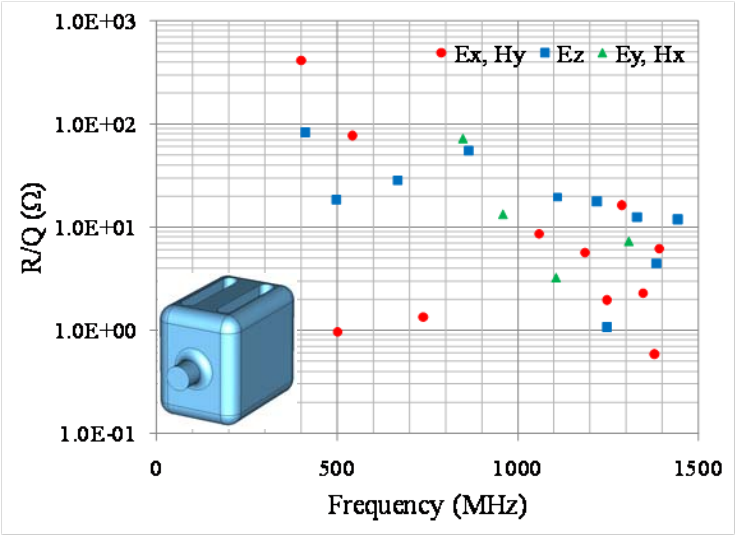

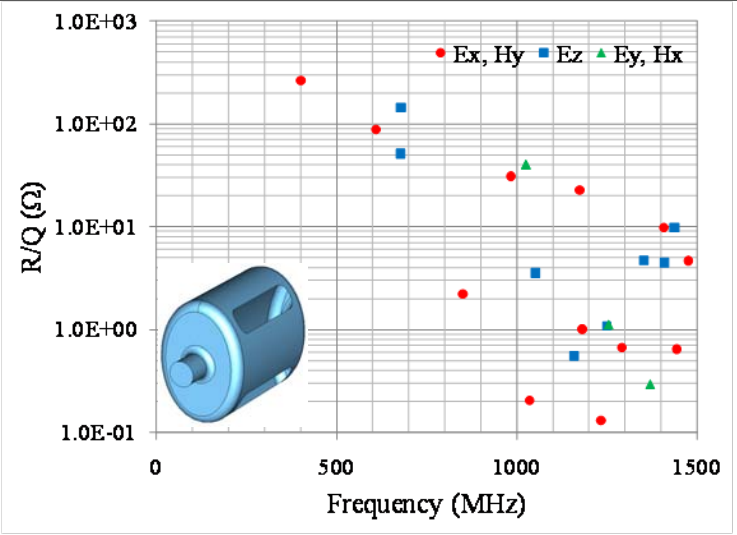

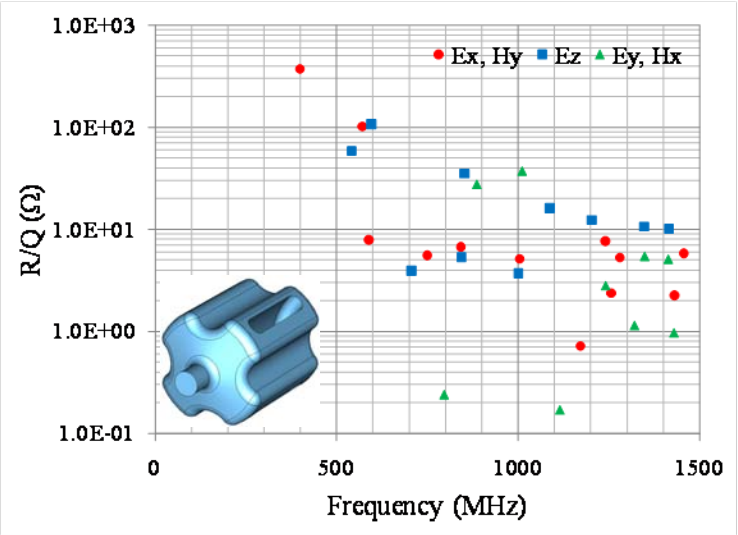

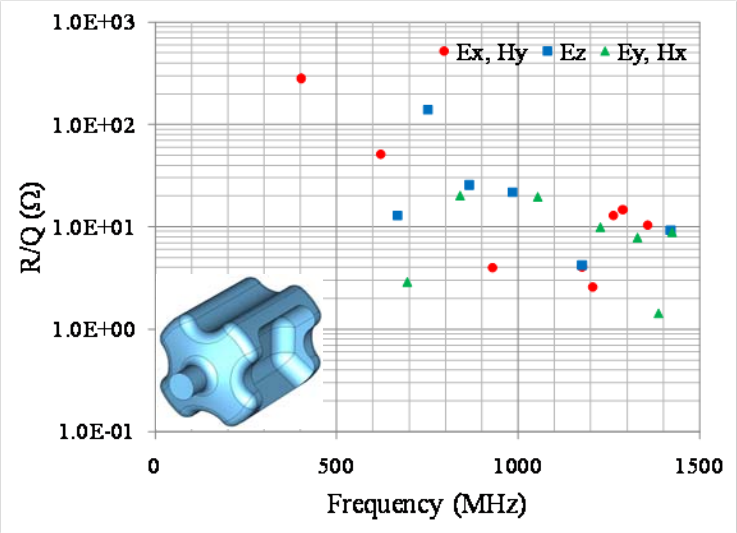

Publications

- ***Design of Superconducting Parallel-bar Deflecting/Crabbing Cavities with Improved Properties***
  - J. R. Delayen, S. U. De Silva, Proc. 2011 Particle Accelerator Conference, New York, NY, 28 March-1 April 2011
- ***Multipacting Analysis of the Superconducting Parallel-bar Cavity***
  - S. U. De Silva, J. R. Delayen, Proc. 2011 Particle Accelerator Conference, New York, NY, 28 March-1 April 2011
- ***Fundamental and HOM Coupler Design for the Superconducting Parallel-bar Cavity***
  - S. U. De Silva, J. R. Delayen, Proc. 2011 Particle Accelerator Conference, New York, NY, 28 March-1 April 2011
- ***Beam Dynamics Studies of Parallel-bar Deflecting Cavities***
  - S. Ahmed, J. R. Delayen, A. S. Hofler, G. A. Krafft, M. Spata, M. G. Tiefenback, K. B. Beard, K. A. Deitrick, S. U. De Silva, Proc. 2011 Particle Accelerator Conference, New York, NY, 28 March-1 April 2011
- ***Design Sensitivities of the Parallel-bar Cavity***
  - S. U. De Silva, J. R. Delayen, Proc. LINAC 2010, Tsukuba, Japan, 13-17 September 2010
- ***Higher Order Mode Properties of Superconducting Parallel-Bar Cavities***
  - Subashini Uddika De Silva, Jean Roger Delayen , Proc. IPAC 2010, Kyoto, Japan, 23-28 May 2010
- ***Design Optimization of Superconducting Parallel-bar Cavities***
  - S. U. de Silva and J. R. Delayen, Proc. 2009 SRF Conference, Berlin, Germany, 20-25 September 2009

Summary

- Both 499 MHz and 400 MHz designs have been improved to meet the
  - Required deflection
  - Dimensional constraints
  - Low surface fields

Geometry	E_P/E_T	E_P/V_T m^{-1}	B_P/E_T mT/(MV/m)	B_P/V_T mT/MV	V_T (MV)	
					@ E_P = 35 MV/m	@ B_P = 70 mT
499 MHz (Cylindrical)	2.6	8.6	5.3	17.6	4.0	4.0
400 MHz (Elliptical)	3.3	8.8	8.2	21.9	4.0	3.2

- Properties of HOMs analyzed to determine damping thresholds
  - Detailed study of HOM damping with coupler ports under way
- Preliminary multipacting analysis was completed
- Cylindrical and elliptical geometries with curved parallel bars look promising
  - Further optimization for both designs on going
  - Measurements on ½ scale model in agreement with simulations
  - Engineering design and manufacturing concepts investigation under way

Parting Words

- Almost all work to-date at ODU performed by graduate students
  - 1 Physics, 1 Mechanical Engineering
  - 2 additional Physics graduate students starting this Summer
  - Additional support and involvement from Niowave and JLab
- Starting 499 MHz prototypes for JLab 11 GeV deflector

- Urgent need to have parameters and specifications for LHC
- Need to decide this coming Thursday which prototype to build
  - Can afford only 1
  - My guess as of now:

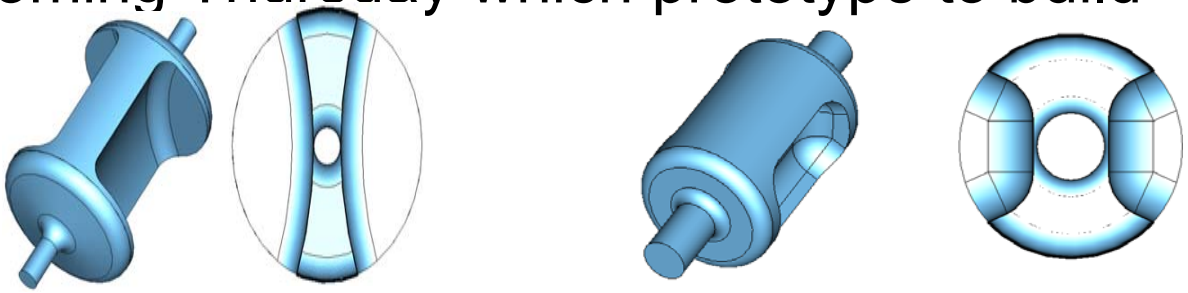
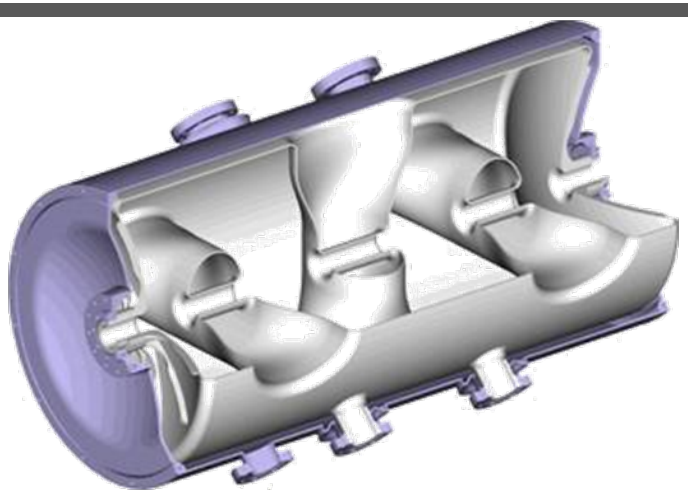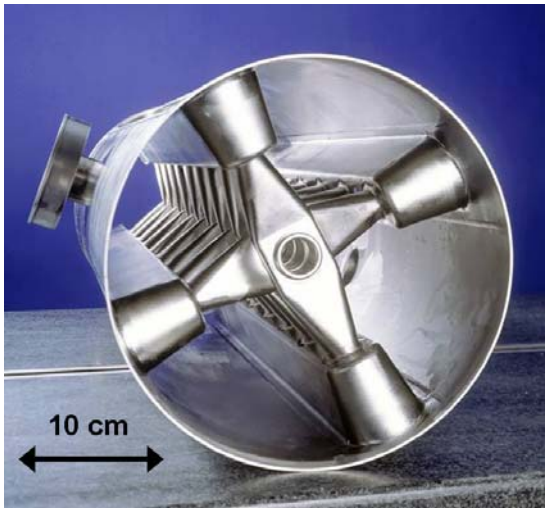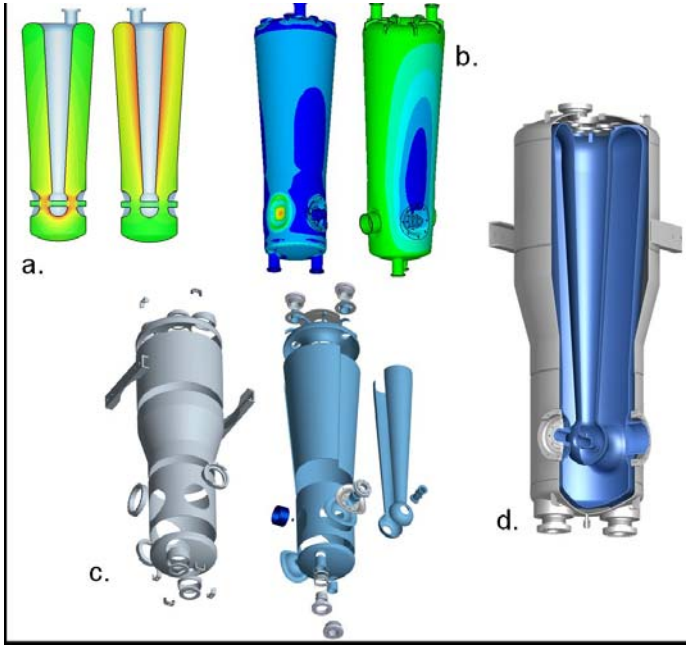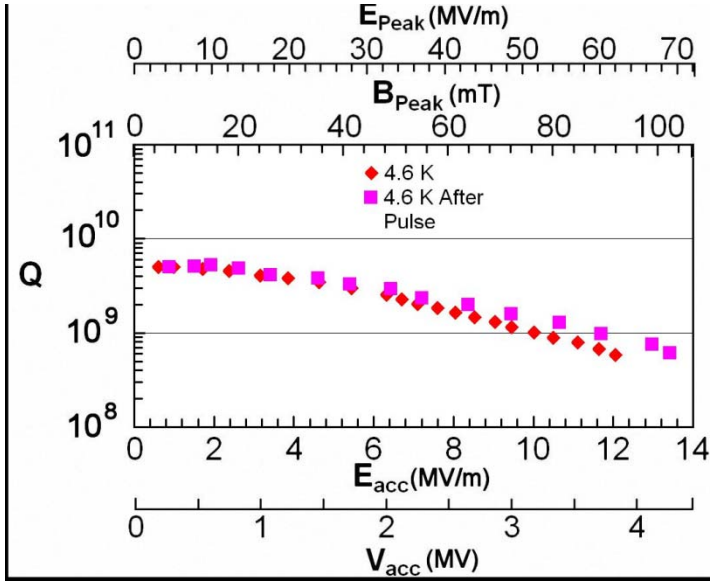
Experience with Complex SRF Cavities