E-Clouds / TMCI : Simulations and Data Analysis, MD Preparation, Feedback Models and System Implications

C. H. Rivetta[1]
LARP Ecloud / TMCI Contributors:
J. D. Fox[1], T. Mastorides[1], M. Pivi[1], O. Turgut[1], S. Uemuda[1], W. Hofle[3], M. Furman[4],R. Secondo[4], J.-L. Vay[4]

[1]Advanced Accelerator Research Department, SLAC
[3]BE-RF Group CERN
[4]LBNL

This work is supported by the US-LARP program and DOE contract #DE-AC02-76SF00515

1. Introduction
2. Macro-particle Simulation Codes
3. MD preparation
4. Analysis of data - Previous MD
5. Modeling and Identification
6. Conclusions

Electron Cloud / TMCI Project - CM15

- CM 15 Report:
  - Start analyzing data: MS summer 2010 E-cloud / TMCI.
  - Propose improvements in macro-particle codes to include realistic feedbacks.
  - Propose MD to drive different parts of the proton bunch.
  - Define parameters for kicker design - Power required / Bandwidth.
- CM 16 Report:
  - Progress in macro-particles simulation codes: Real Feedback Models - Statical errors.
  - MD preparation: Simulations - Estimations.
  - Further analysis of MD data - E-clouds - Measurements (y-displ.)
  - Integration of these results to modeling and identification.

Macro - Particle Simulation codes : Feedback System

Generalities

The macro-particle simulation code solves

$$\frac{d^2\vec{x}_{p,i}(s)}{ds^2} + \mathbb{K}(s)\vec{x}_{p,i}(s) = \Delta P_{e,i}(\vec{x}_{p,i}(s)) + Ki_k(<\vec{x}_{p,i}(t, s_{BPM})>_k, s_{ki})$$

$$\frac{d^2\vec{x}_{e,j}(s)}{ds^2} = \Delta P_{p,j}(\vec{x}_{e,j}(s))$$

where

$$\Delta P_{e,i}(\vec{x}_{p,i}(s)) = -\frac{e}{\gamma m_p c^2}\sum_{n=0}^{n_{IP}-1} E_e[\vec{x}_{p,i}(s); f_e(x,y,t)]\sigma(s - ns_{el})$$

$$\Delta P_{p,j}(\vec{x}_{e,j}(s)) = -\frac{e}{m_e}E_p[\vec{x}_{e,j}(s); f_{pSL}(x,y,t)],$$

$Ki_k(<\vec{x}_{p,i}(t)>_k, s_{ki})$: feedback signal based on $<\vec{x}_{p,i}(t, s_{BPM})>_k$

We have a stochastic system represented by a limited number of macro-particles - Statistical errors - Limitations due to feedback hardware.

Macro - Particle Simulation Codes : Realistic Feedback

Add realistic representing feedback system

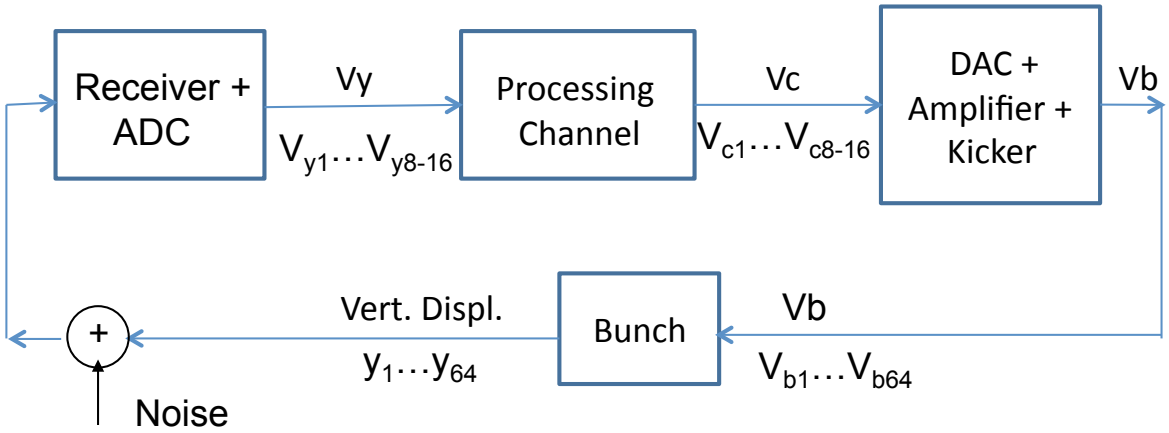

- $V_{b_k} = Ki_k(< \vec{x}_{p,i}(t) >_k, s_{ki})$, $y_k =< \vec{x}_{p,i}(t, s_{BPM}) >_k$
- Receiver, processing channel, amplifier, kicker include frequency response, signal limits and noise.
- $[V_{b_1} \ldots V_{b_{64}}]^T = M_{PWR}\,[V_{c_1} \ldots V_{c_{16}}]^T$
- Validate with measurements : Macro-particle simulation codes are our test-bench for control algorithm - Test stability and performance of the feedback system.

Macro-Particle Simulation Codes : Realistic Feedback

Results from C-MAD

Kick at turn 20, free vertical oscillation of the bunch. (out of scale)

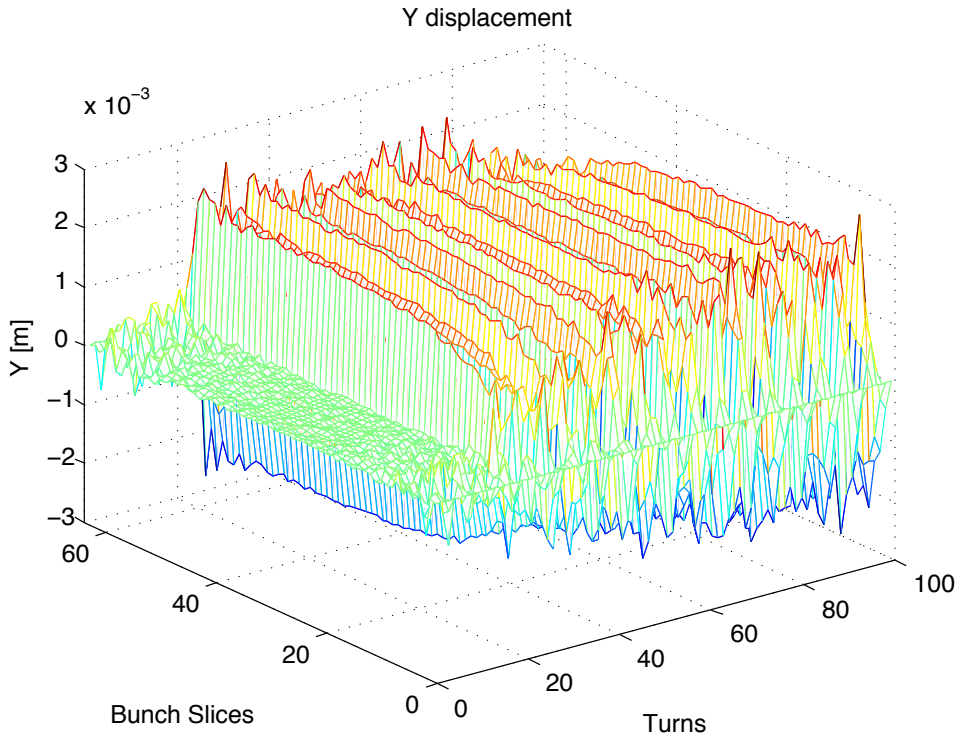

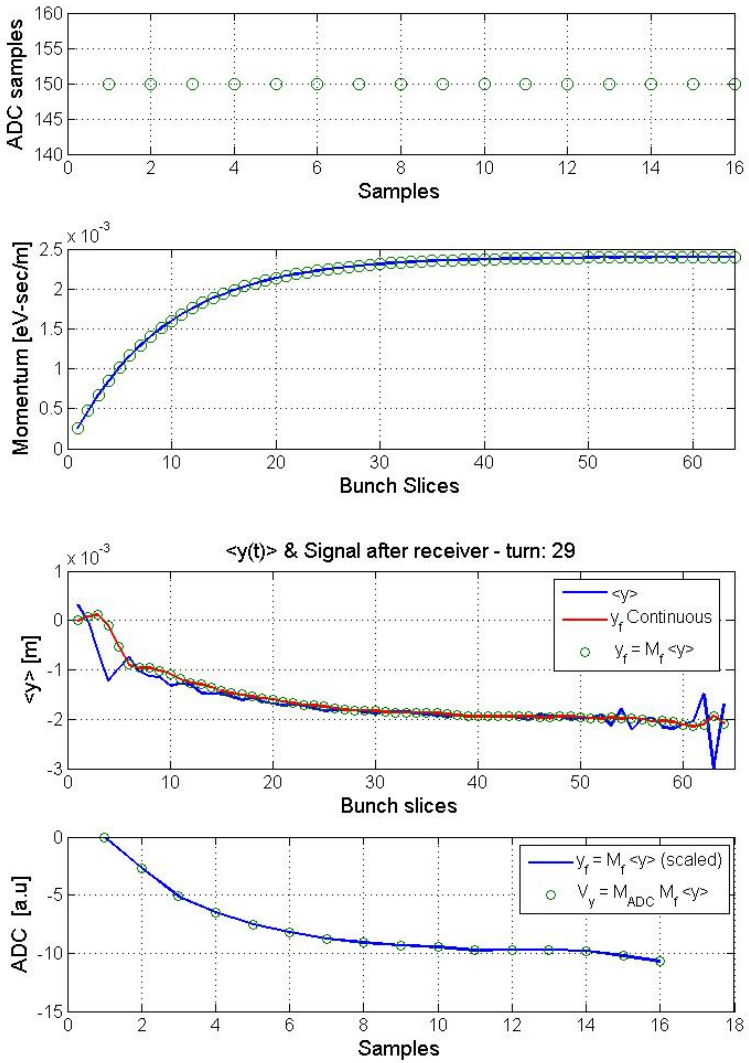

time span: 6.13 ns.

Macro - Particle Simulation Code : Statistical Errors

Estimation of the vertical position

$$\hat{y}_k(s) = \sum_{i=1}^{N_k} y_{p,i}(s) \rightarrow$$

$$\sigma_{\hat{y}} = \sigma_y / \sqrt{N_k}$$

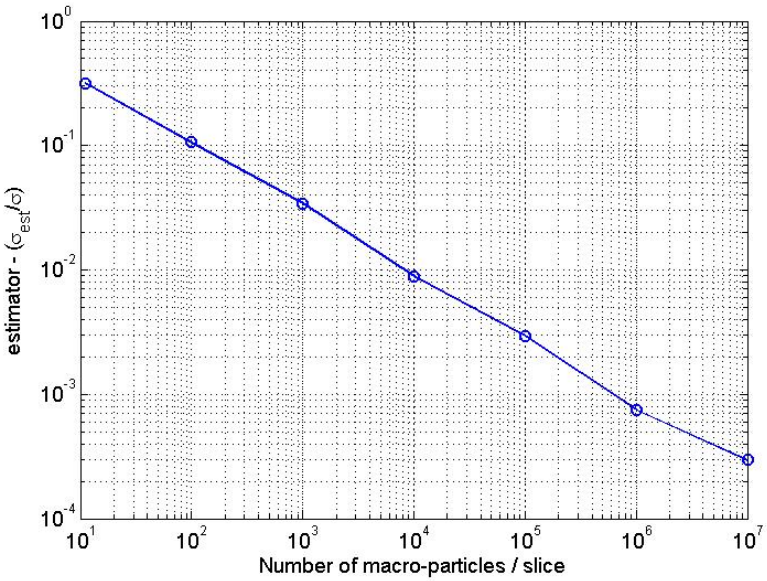

For a bunch with 300K macro-particles...
(red: equal number of particles per slice,
blue: regular slice space)

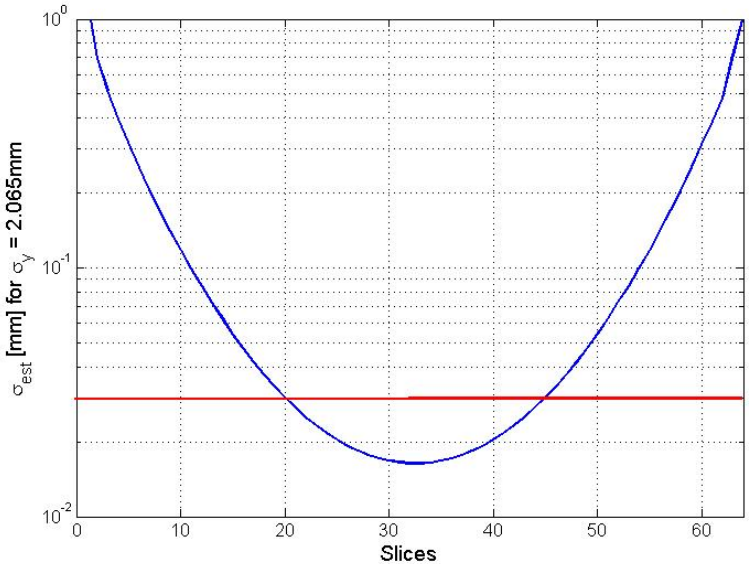

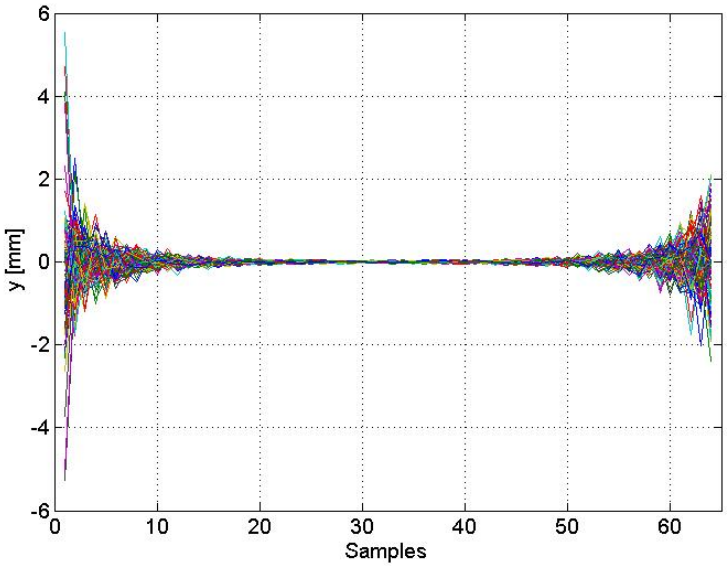

Macro - Particle Simulation Code : Next steps

Error bounds for stochastic variables

- Estimate the error bounds for $\hat{y}_k$ and $\hat{V}_{b_k}$
- Validate feedback models with measurements
- Benchmark C-MAD, WARP, Head-tail for different operations in SPS.
- Estimate kicker strength for different operation conditions.

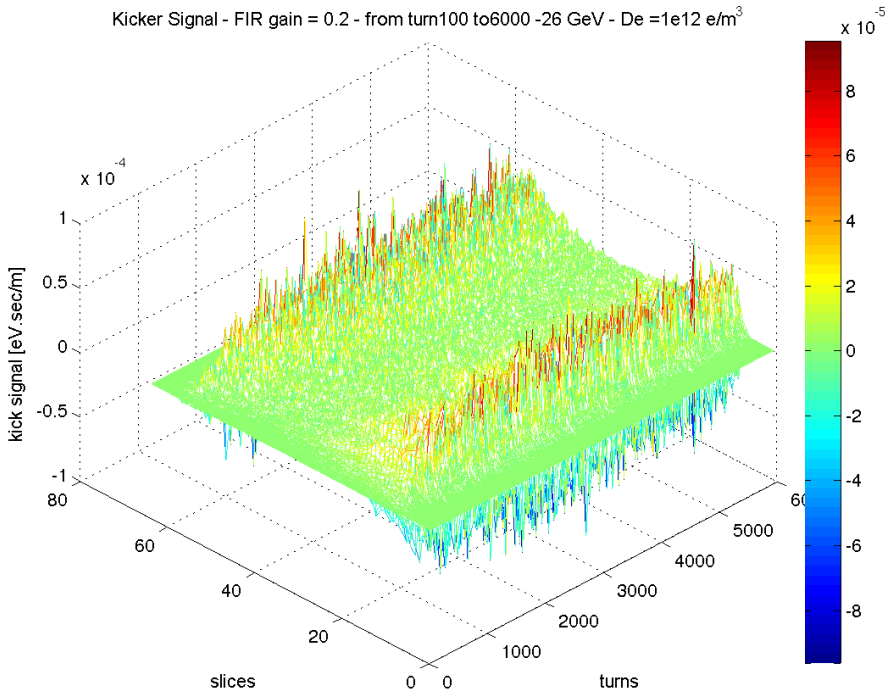

Estimation of kicker signal to stabilize proton bunch using WARP -
E-cloud induced instability (1e12 electrons, 1e11 protons) .

MD preparation

Goal: Drive individual sections of the bunch - Estimate Models

- Hardware development - Excitation - Power Stage - Vertical displacement measurement.
- Analyze and estimate using macro-particle simulation codes the signal levels and outcomes of MD measurements.
- Estimate bunch reduced dynamical model in open loop- Below e-cloud instability threshold.

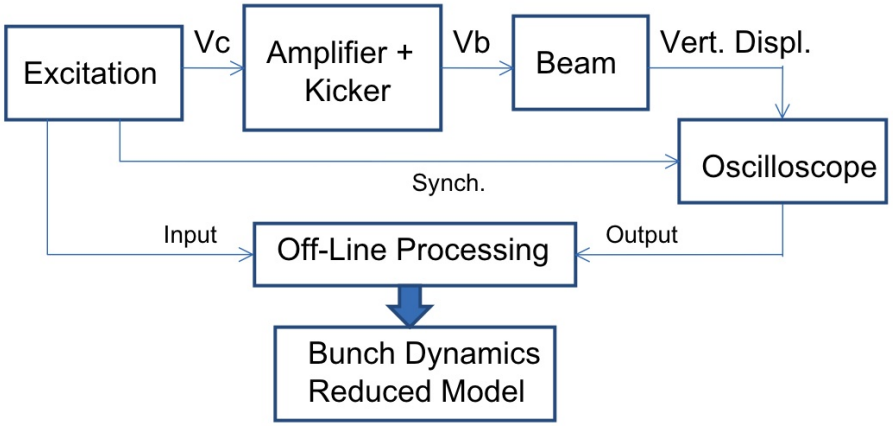

- Drive individually different areas of the bunch (Excitation - Amplifier - Kicker)
- Measure with scope the receiver signals $\Delta - \Sigma$. Estimate vertical displacement for different sections of the bunch.
- Based on Input-Output signals, estimate bunch reduced model.

MD preparation

Goal: Drive individual sections of the bunch - Estimate Models

- Hardware development - Excitation - Power Stage - Vertical displacement measurement.
- Analyze and estimate using macro-particle simulation codes the signal levels and outcomes of MD measurements.
- Estimate bunch reduced dynamical model in open loop- Below e-cloud instability threshold.

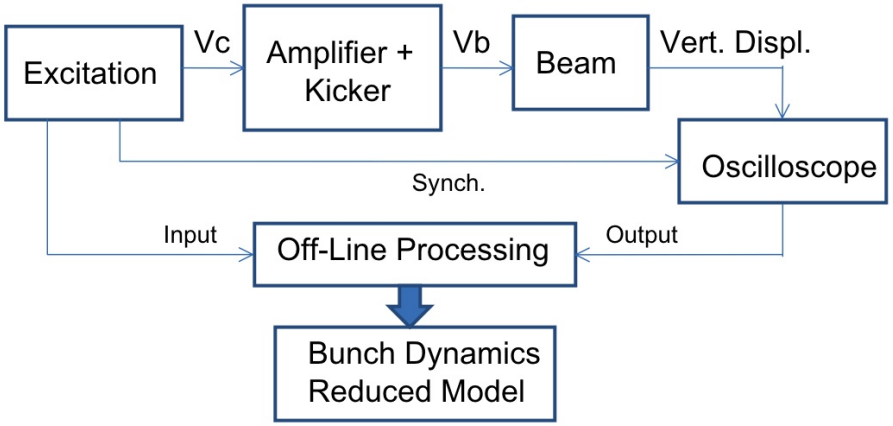

- Drive individually different areas of the bunch (Excitation - Amplifier - Kicker)
- Measure with scope the receiver signals $\Delta - \Sigma$. Estimate vertical displacement for different sections of the bunch.
- Based on Input-Output signals, estimate bunch reduced model.

MD preparation

Goal: Drive individual sections of the bunch - Estimate Models

- Hardware development - Excitation - Power Stage - Vertical displacement measurement.
- Analyze and estimate using macro-particle simulation codes the signal levels and outcomes of MD measurements.
- Estimate bunch reduced dynamical model in open loop- Below e-cloud instability threshold.

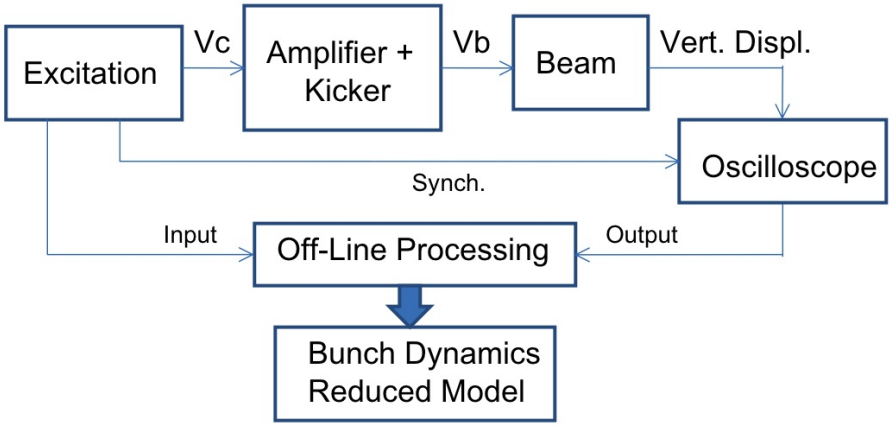

- Drive individually different areas of the bunch (Excitation - Amplifier - Kicker)
- Measure with scope the receiver signals $\Delta - \Sigma$. Estimate vertical displacement for different sections of the bunch.
- Based on Input-Output signals, estimate bunch reduced model.

MD preparation

Simulation Results - Estimation of Vertical Displacement.

- SPS Kicker: Max. $V_\Delta = 200V$, Max. Momentum $= 4.10^{-6}$ eV.s/m, Kick in single turn $\rightarrow y_{max} = 3.27\mu m$ at 26 GeV
- It is necessary to kick the beam using a periodic excitation near the betatron frequency (frac. tune = 0.185)

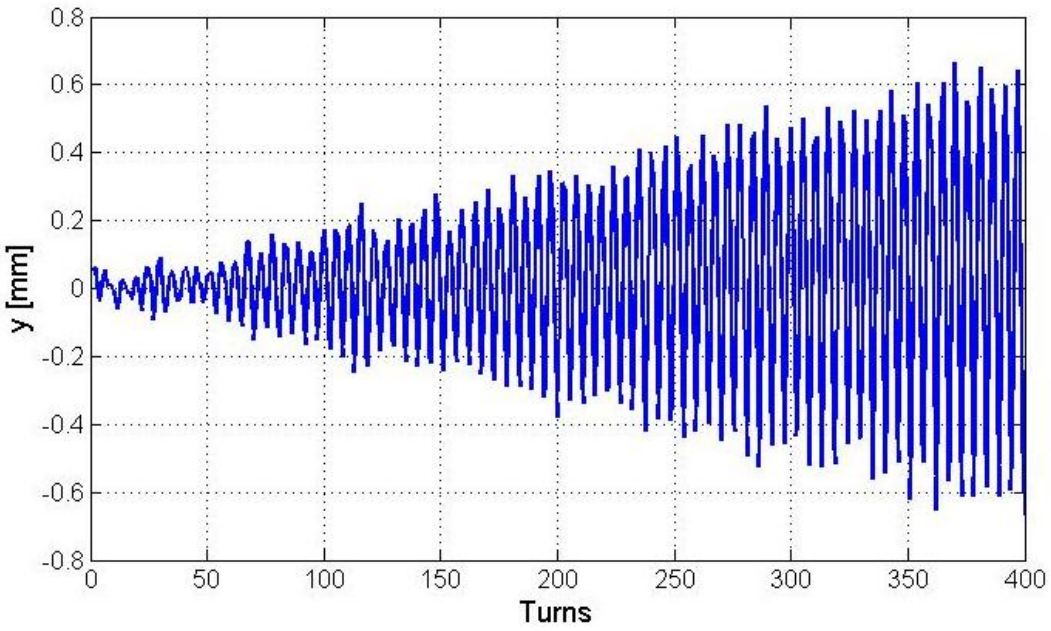

Kicker signal for all the slices: $V_b = 4.10^{-6} sin(2\pi 0.185 Turns)$ eV.s/m. C-MAD result: Vertical displacement of center of the bunch.

MD preparation

Simulation Results - Excitation signal: Sweep around betatron frequency

- C-MAD simulation includes the frequency response of the kicker.
- The frequency of the excitation signal sweeps between $0.185 \pm 5\%$.

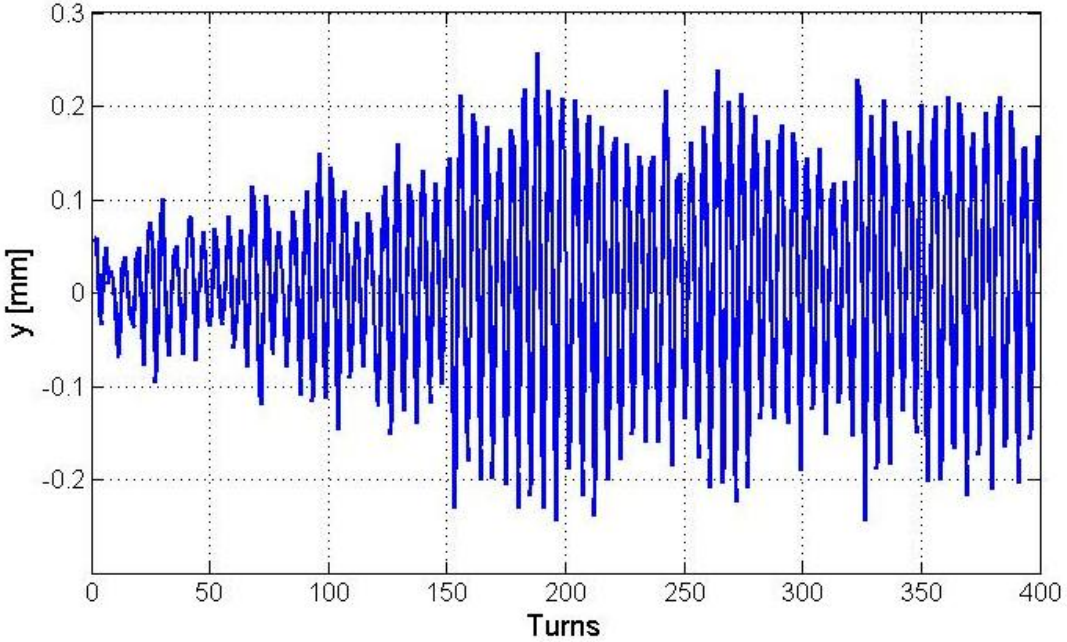

Momentum applied to the bunch at turn 50.

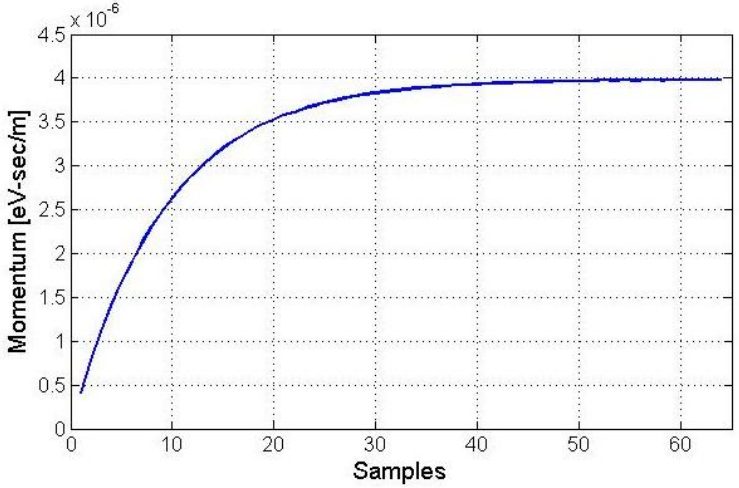

time span: 6.13 ns.

MD preparation

MD - Summer 2011 Plan

- Hardware set-up in the SPS tunnel
- Synchronization of the excitation board to the SPS reference-clock signals
- Synchronization of kicker signal with single bunch in the machine.
- Drive 'mode 0" of the bunch using different sweeps.
- Drive 'head-tail' of the bunch using different sweeps.
- ....

Analysis of Data - Previous MD

Further analysis of previous MDs

- SPS MD 2009 1st stack: stable - 2nd stack: e-cloud instabilities. SPS MD 2010 $1^{st} - 2^{nd}$ stack: stable - 3rd stack: e-cloud instabilities. How e-clouds affect different bunches??
- WARP code extended to multiple bunches to analyze the effect of e-clouds bunches in different regions of the beam train.

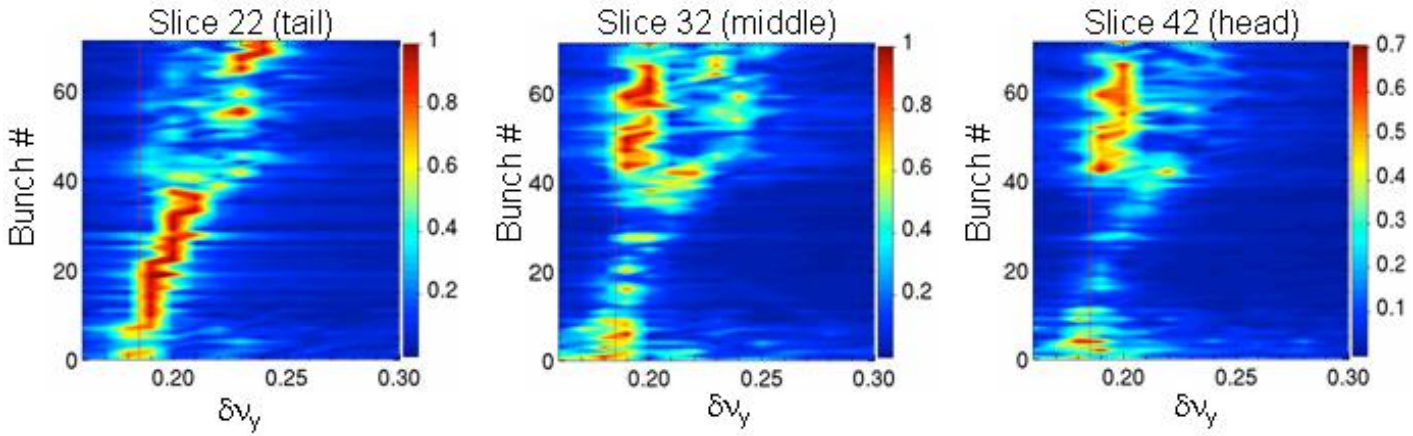

WARP simulation: Tune shift for different parts of the bunches. Similar observation from SPS MD analysis: Large tune shifts/unstable bunches toward the end of the stack.

Analysis of Data - Previous MD

Further analysis of previous MDs

- SPS MD 2009 Detailed measurement of the tune for different sections of the bunch - For all bunches of the 2nd stack
- Analysis of the behavior in time domain of the different areas of the bunch. Effect of Longitudinal dynamics.

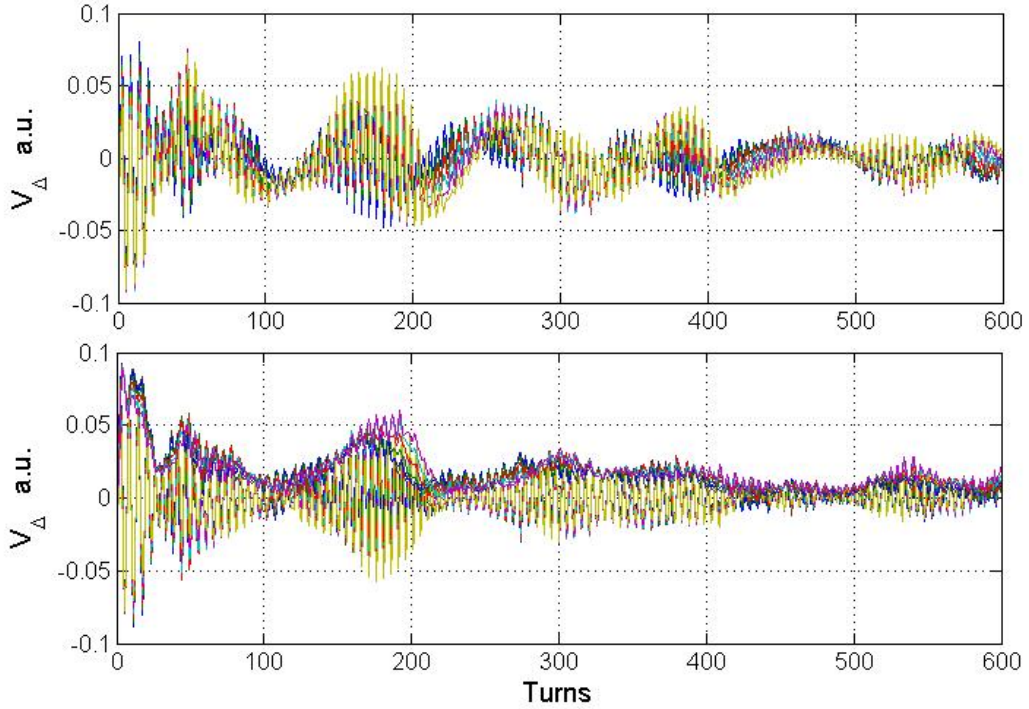

Measurement of V_Δ (Equalized) for different slices in the tail of the bunch:
V_Δ perturbed by longitudinal dynamics due to injection mis-matching.
top: Raw data,
bottom: Subtract additive long. perturbation.
Tune: 0.195

Analysis of Data - Previous MD

Further analysis of previous MDs

- All the analysis based on the measurements uses V_Δ (dipole) to represent vertical motion.
- Estimation of the 'true' vertical displacement for different areas of the bunch can be defined by: $\hat{y}(t) \simeq \hat{y}_k = K_y \frac{V_\Delta(k)}{V_\Sigma(k)}$
- Mis-matching in the $\Sigma - \Delta$ signal path introduces systematic errors in the estimation - Off-line equalization for identification.

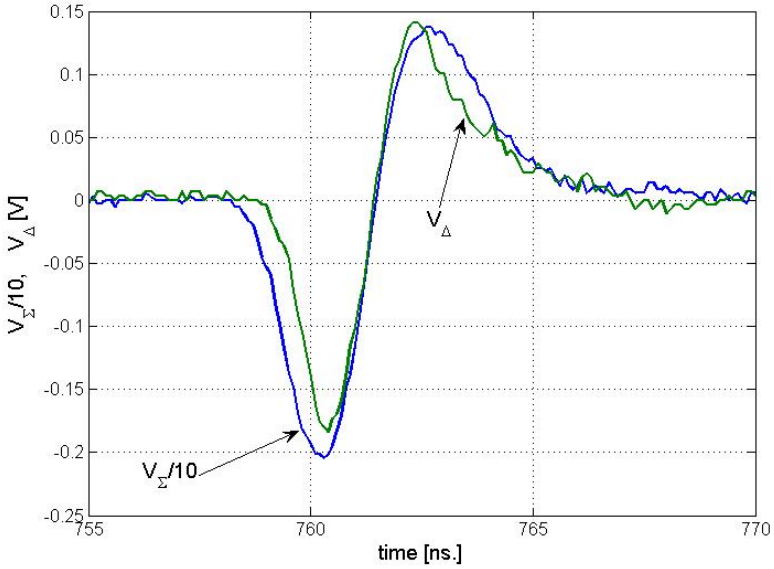

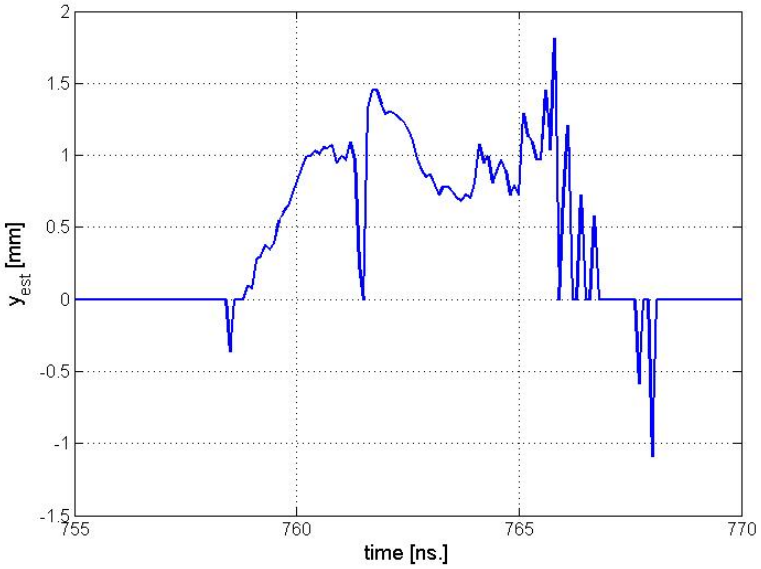

Modeling and Identification

Bunch reduced dynamics model - Identification

- Linear Time-Variant Model.- Synchrotron motion effects have to be included

$$
\begin{aligned}
x(k+1) &= A(kT_{tev})x(k) + B(kT_{tev})u(k) \\
y(k) &= C(kT_{tev})x(k)
\end{aligned}
$$

- All parameters are identified based on measurements.

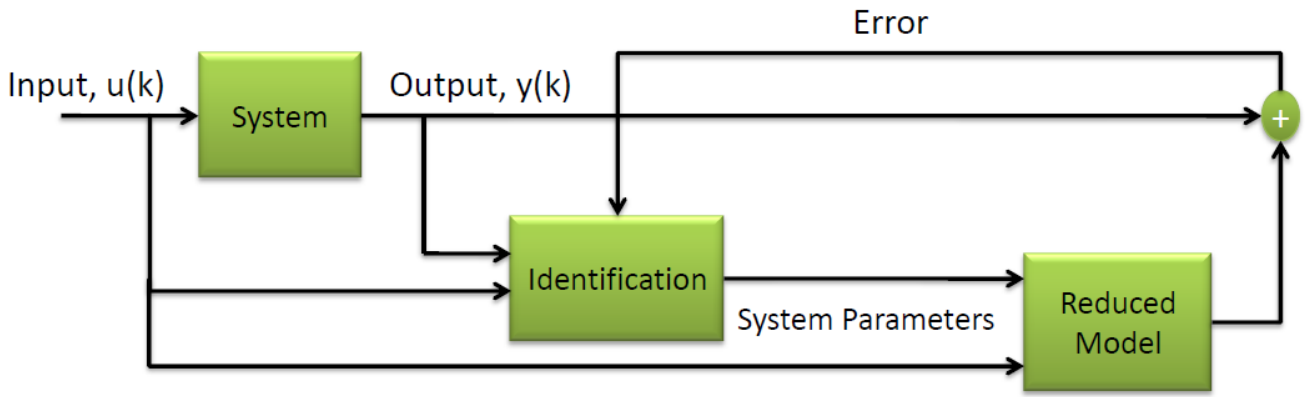

Modeling and Identification

Bunch reduced dynamics model - Identification

- Before we drive the beam in SPS, we use macro-particle simulation codes to mock-up the identification algorithms and set-up.

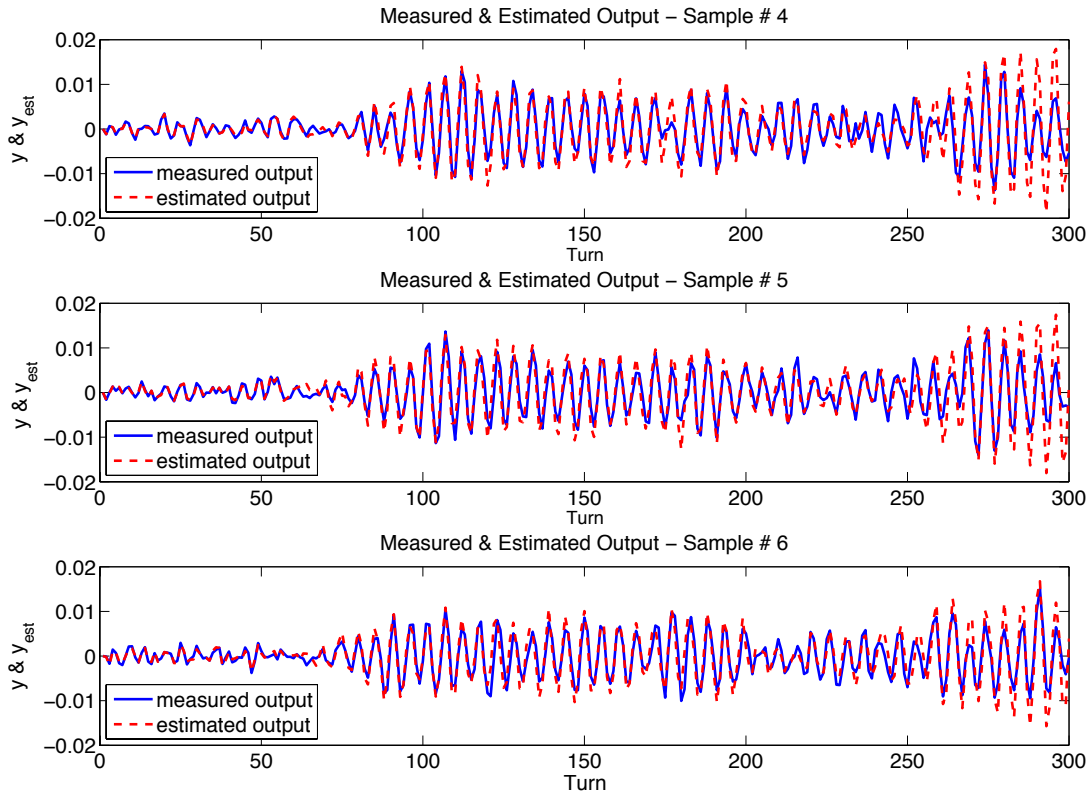

- Bunch driven by white noise using C-MAD code. $y(t)$: C-MAD vertical displacement for slices 4-5-6, $y_{est}(t)$: Estimated vert. displ. using lineal time-variant reduced model.

Conclusions

Conclusions - Further plans

- Introduced realistic models for the feedback system in macro-particle simulation codes (C-MAD, WARP), next Head-tail.
- Quantifying statistical / estimation errors in the variables used in the macro-particle codes.
- Finishing preparation of MD summer 2011 and estimation of signals to be measured.
- Analyzing in detail open loop dynamical behavior of the proton bunch based on previous MD measurements
- Improving vertical displacement measurement for different areas of the bunch.
- Defining identification techniques to extract reduced dynamical model of the proton bunch - Extend to techniques based on periodic excitation signals.

Thanks to the audience for your attention!!!, ...Questions?