Feedback Control of SPS E-Cloud/TMCI Instabilities

LARP CM16 Progress Report, Ideas for Discussion

May 16, 2011

John D. Fox

LARP Ecloud Contributors

M.Furman, Stefano De Santis, Rafaello Secondo, Jean-Luc Vay (LBL)

Gianluigi Arduini, Wolfgang Hofle, Giovanni Rumolo, Benoit Salvant (CERN)

John D. Fox, Claudio Rivetta, Themis Mastorides, Ozhan Turgut,Sho Uemura(SLAC)

Project and CM-16 Talk overview

Ongoing project SLAC/LBL/CERN via US LARP (see past collaboration meeting slides)

Proton machines, Ecloud driven instability, TMCI - impacts upgraded LHC (and SPS injector)

CM-16 talk 1 Feedback Control of SPS E-Cloud/TMCI Instabilities (J. Fox)

- Overview
- Excitation system, progress and plans
- MD plans
- Kicker report
- Processing channel R&D

CM-16 Talk 2 Dynamics models and numerical simulation efforts (C. Rivetta)

- Numeric simulations, w/wo feedback models
- Dynamics estimation techniques, system identification and estimation

CM-16 Talk 3 CERN plans, Feedback R&D, injector upgrade (W. Hofle)

- Ecloud/TMCI mitigation plans
- HL upgrade, injector upgrade plans

LHC/SPS Ecloud/TMCI instability R&D Effort

Ongoing project SLAC/LBL/CERN via US LARP

Proton machines, Ecloud driven instability - impacts upgraded LHC (and SPS injector)

- Photoelectrons from synchrotron radiation - attacted to positive beam
- Single-bunch effect - head-tail (two-stream) instability

TMCI - instability from degenerate transverse modes coupling

Research directions

- Simulations - numeric nonlinear PIC, simplified linear models
- Machine measurements - understand required bandwidth, validate simulations
- What sort of feedback control is feasible?
- Development of 4 GS/sec. processing channel demonstrator

Kicker structures

- Research effort to investigate useful 1 - 2 Ghz bandwidth transverse kicker
- Use periodic slotline (stochastic cooling)? Array of 1/4 wave striplines? overdamped cavity?

Progress Nov 2010 - May 2010

- Organization and Staffing, coordination, turnover
- Ecloud/TMCI Modeling, dynamics estimation, feedback simulation efforts
- Hardware efforts (4 GS/sec. synchronized excitation)
- Tunnel amplifiers, testing, hardware preparation for driven SPS MD experiments
- Near-term plans (MD, models, lab), MD analysis techniques
- Kicker Design Study
- 4 GS/sec small scale feedback channel (technology demonstrator)

Multi-lab effort - coordination on

- Non-linear Simulation codes (LBL - CERN - SLAC)
- Dynamics models/feedback models (SLAC -LBL)
- Machine measurements- SPS MD (CERN - SLAC)
- Hardware technology development (SLAC)
- Kicker Options - Design report (LBL/SLAC)

Organization and Staffing

SLAC John Fox, Claudio Rivetta, Jeff Olsen

2 grad students, 1 “almost grad” student

- Ozhan Turgut (system identification, dynamics models)
- Sho Uemura (Amplifier systems, MD instrumentation)
- I. Rivetta (excitation system and MATLAB)

LARP support for J. Fox (50%) , C. Rivetta(35%), Jeff Olsen-John Dusatko (30%).

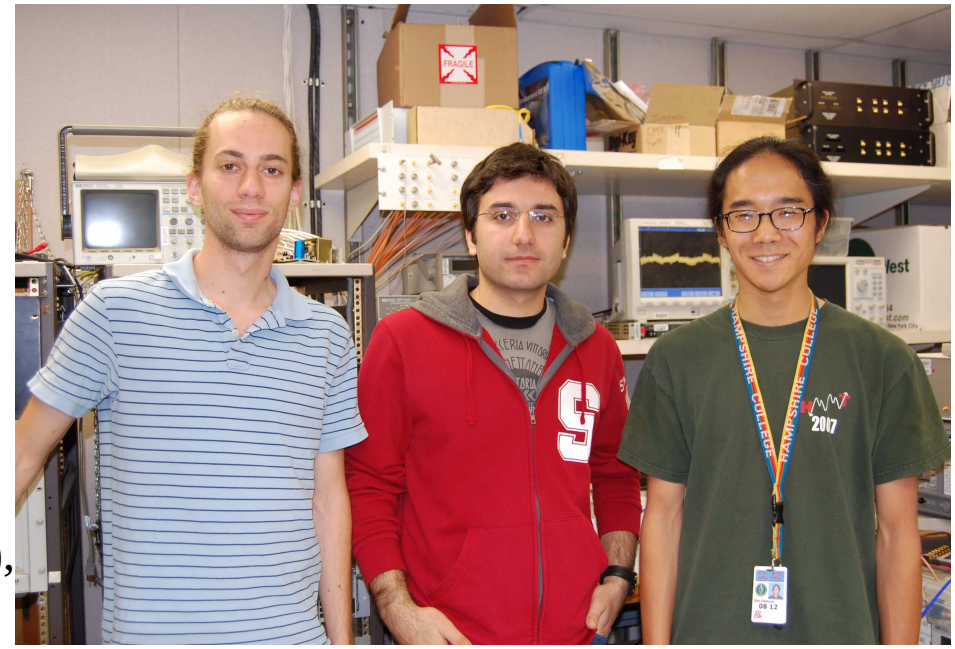

CERN - Wolfgang Hofle, Benoit Savant

- SPS/LHC transverse feedback, TMCI models
- MD Planning and MD measurements

Ecloud Simulation effort (LBL)

J-L Vay, M Furman, R. Secondo (LBL)

- simplified intial feedback model in WARP (Important contributions from R. Secondo)

Getting Ready - SPS Excitation MD summer 2011

Past MD efforts look at unstable beam - very complex dynamics (see CM-15 movies)

- Plan - drive beam below instability threshold - look at dynamics as currents increase
- drive selected bunch, observe response
- Validate numeric codes against machine data
- important test bed for full scale back end at 4 GS/sec.

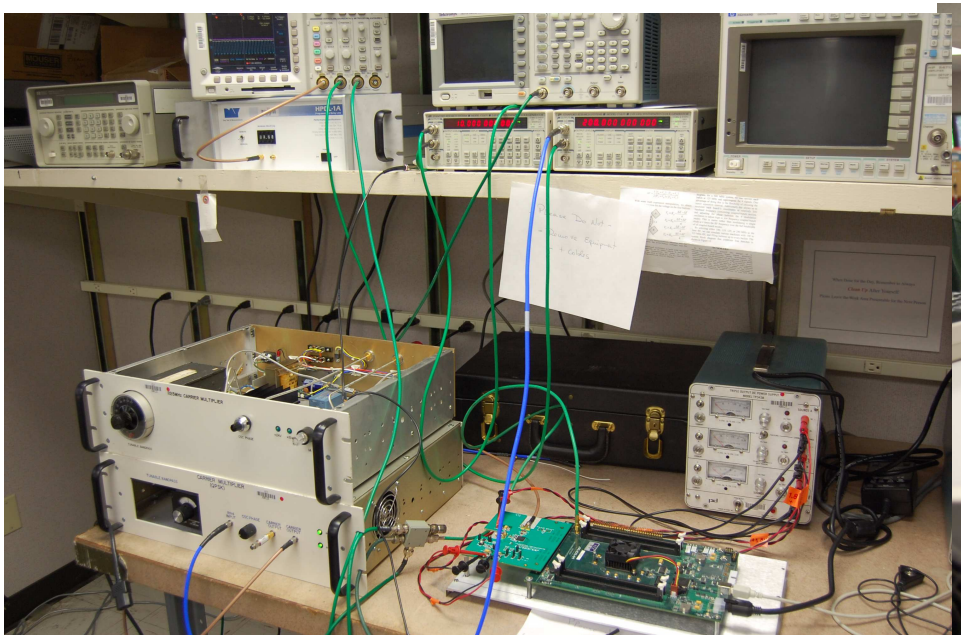

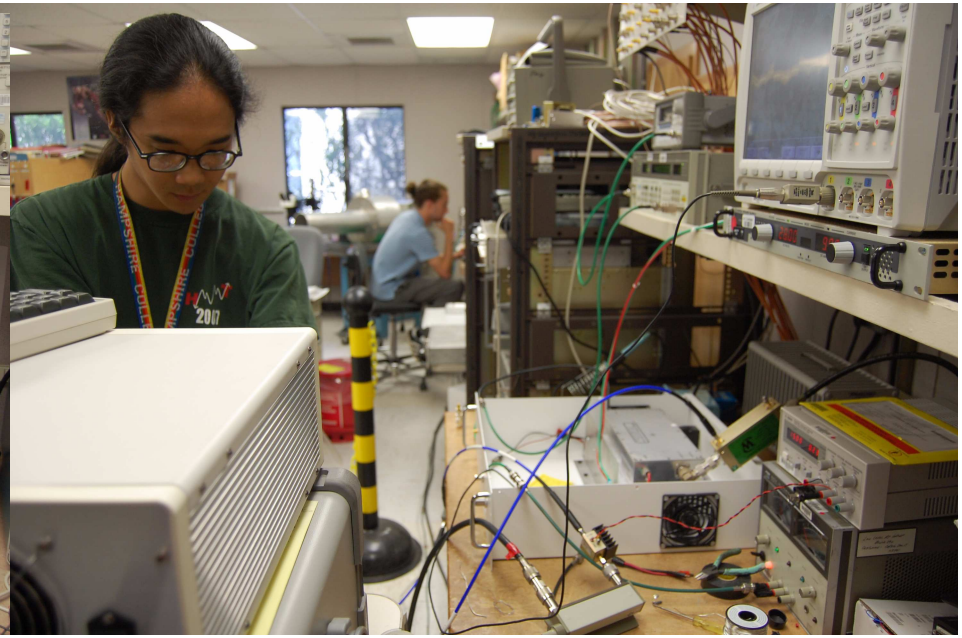

Lots of detailed hardware and software to develop and get ready to do the measurements

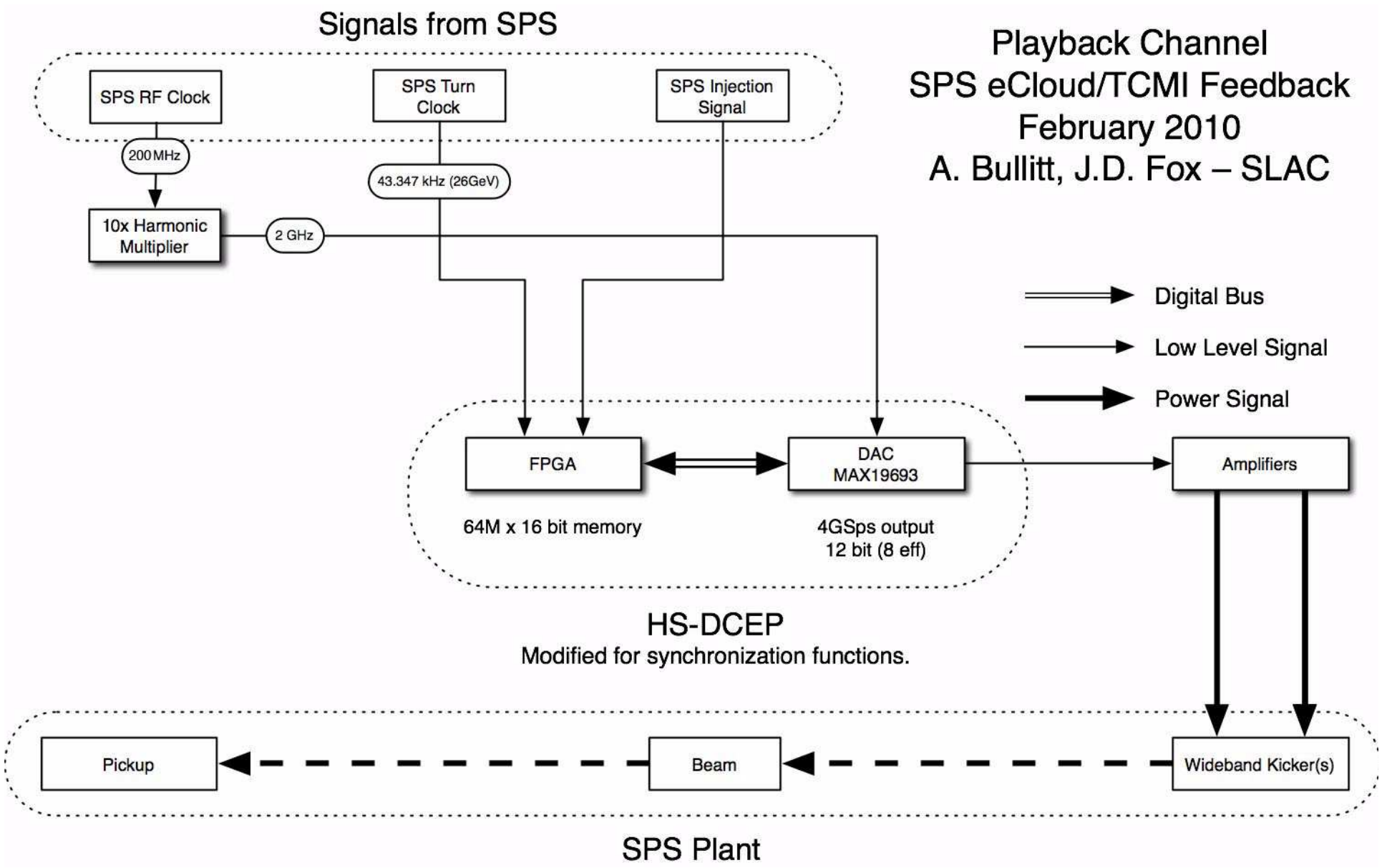
Signals from SPS
Playback Channel
SPS eCloud/TCMI Feedback
February 2010
A. Bullitt, J.D. Fox – SLAC
SPS RF Clock
SPS Turn Clock
SPS Injection Signal
200 MHz
43.347 kHz (26GeV)
10x Harmonic Multiplier
2 GHz
Digital Bus
Low Level Signal
Power Signal
FPGA
DAC MAX19693
Amplifiers
64M x 16 bit memory
4GSps output
12 bit (8 eff)
HS-DCEP
Modified for synchronization functions.
Pickup
Beam
Wideband Kicker(s)
SPS Plant

Amplifier development for MD studies

Broadband 80W 20 - 1000 Mhz amplifiers

- Longer fabrication, more interaction with AR-Kalmus than planned
- modified output stage bias (more class A less class AB) to improve transient response
- Not ideal, useful for MD studies. Chassis and couplers, control etc in fab , Cart ready to load

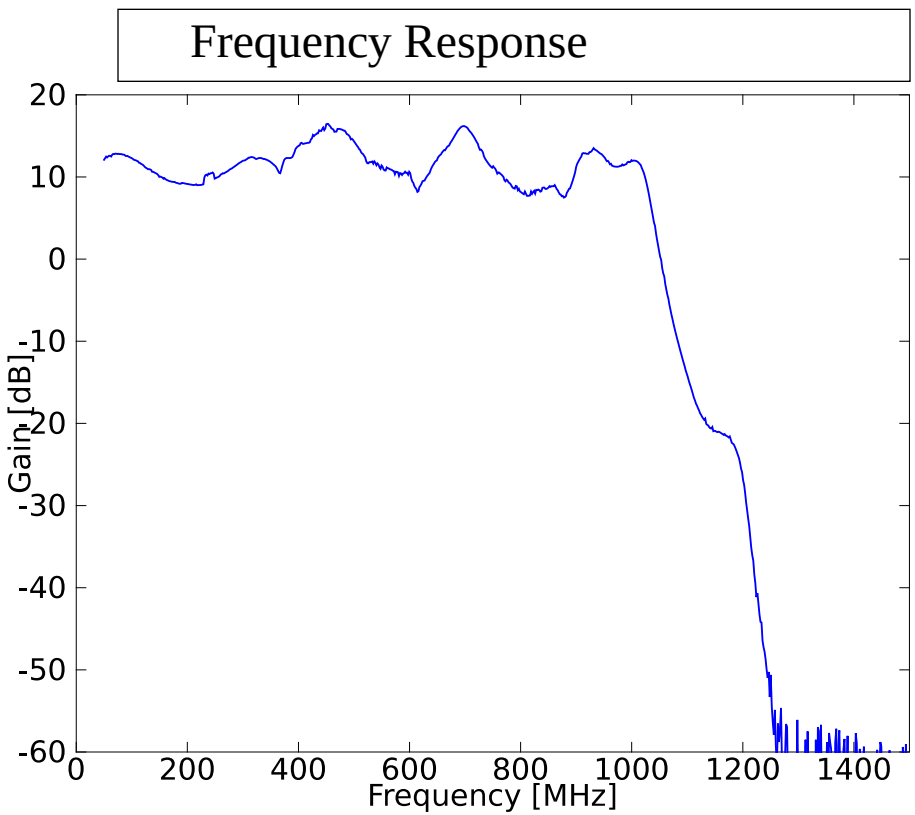

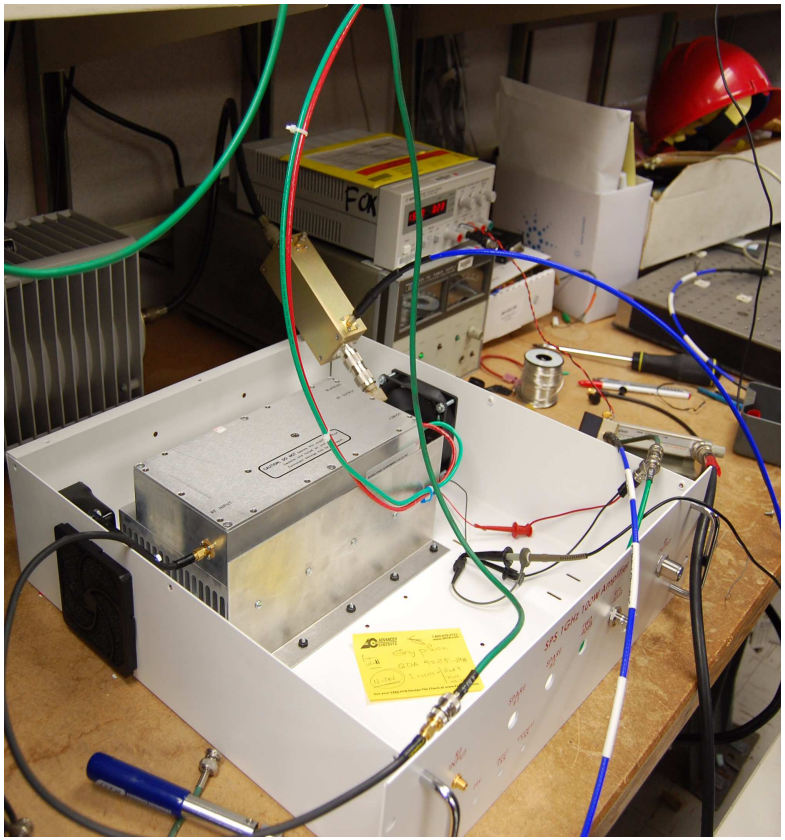

Amplifier development for MD studies

Broadband 80W 20 - 1000 Mhz amplifiers

- modified output stage bias (more class A less class AB) to improve transient response
- Calculated Impulse Response (left) Ringing tail is from output combiner response
- time response is still useful for head-tail differential excitation (25 ns bunch spacing)

Impulse response

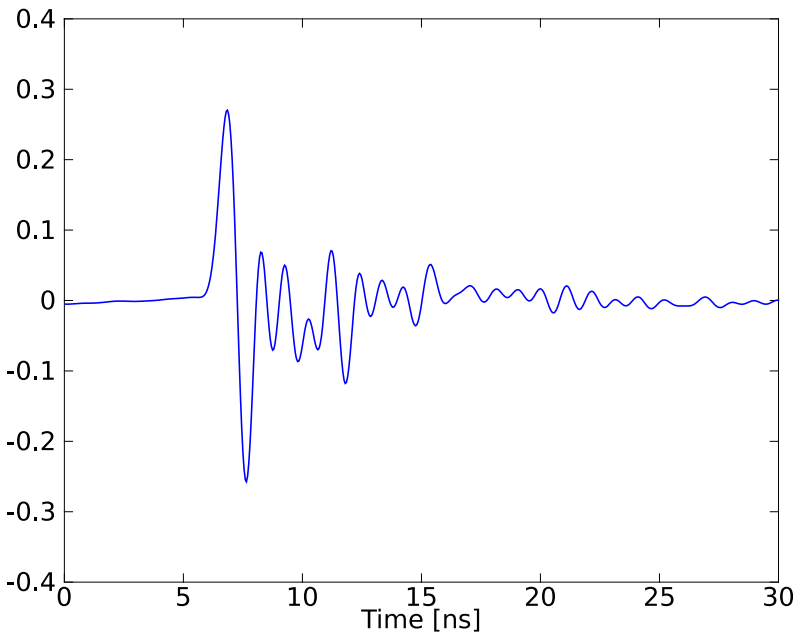

500 MHz 1 cycle

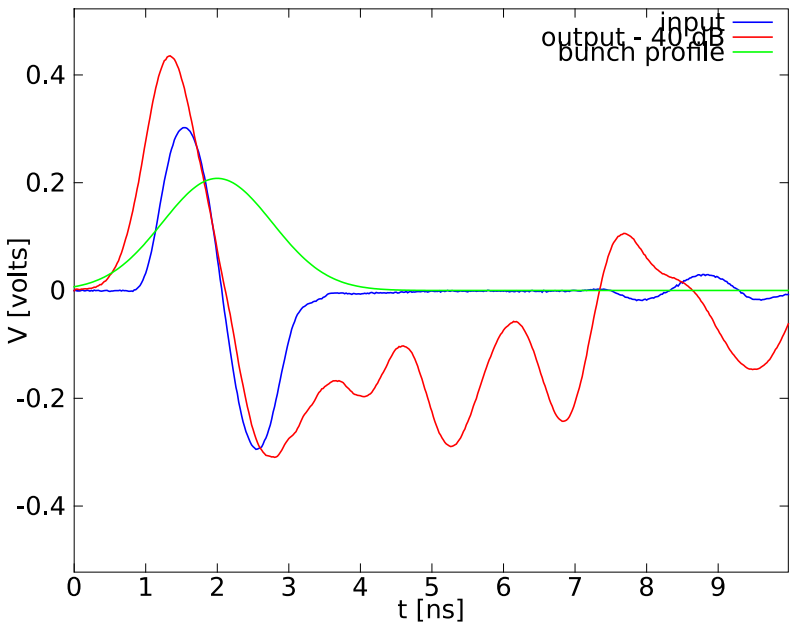

Driven Beam Experiments

Progress - Synchronized excitation code - synch to SPS RF and turn

Synchronization of turn, RF and 4 GHz oscillators

System can drive selected bunches in trains, 32 samples/ bunch (250 ps/sample)

Tunnel “cart” for 2011 SPS MD

- 320W (4 80W) 20 - 1000 MHz amplifiers
- Tunnel high-power loads
- Simple on/off remote control

Amp tested, cart in fab

- 180 Hybrids/ 0 Hybrids for 1 - 4 feed
- directional couplers on outputs
- Diode Detectors on reverse power with interlock
- add equalizer to compensate for cable and kicker response? (no, put in excitation file)

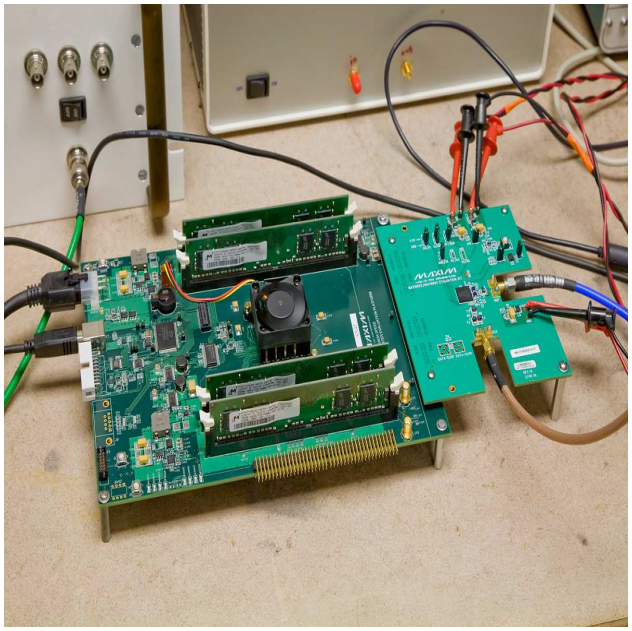

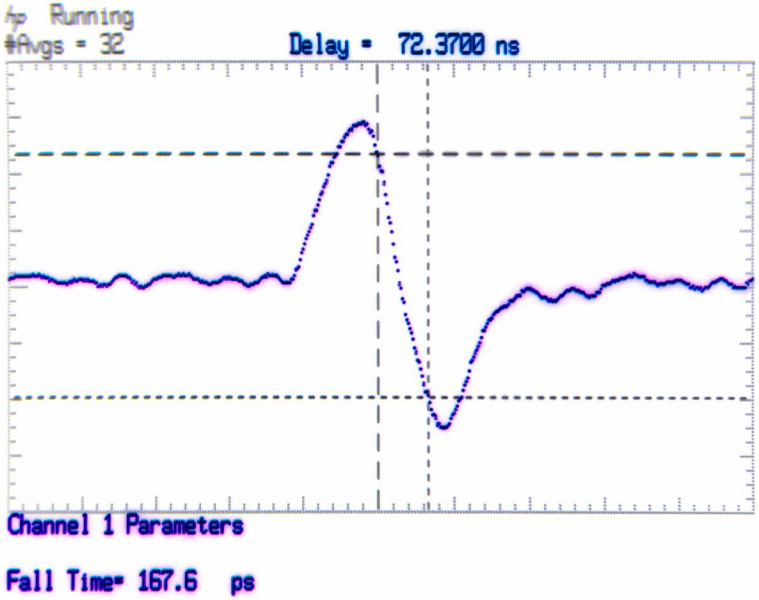

Doublet Response 4 GS/sec. D/A

MD Tools , GUI to run 4 GS/sec D/A

Fast operation and generation of sequence files for playback

- Select bunch (synchronized to turn fiducial and 200MHz RF

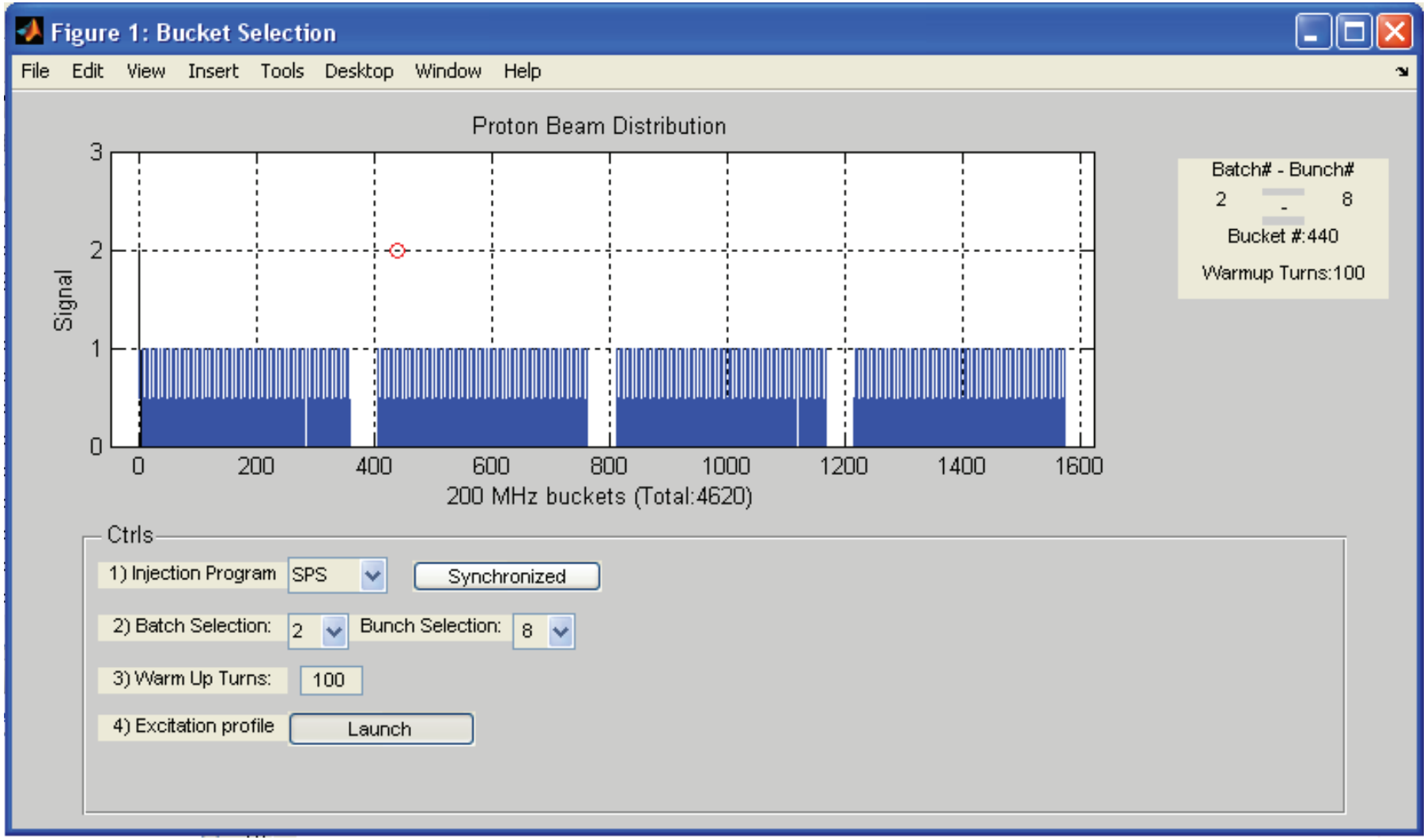

MD tools - excitation files

for selected bunch, 32 samples at 4 GS/sec (8 ns total)

- sine wave, randowm or modulated excitation
- modulation applied turn by turn at betatron (or arbitrary) modulation frequency

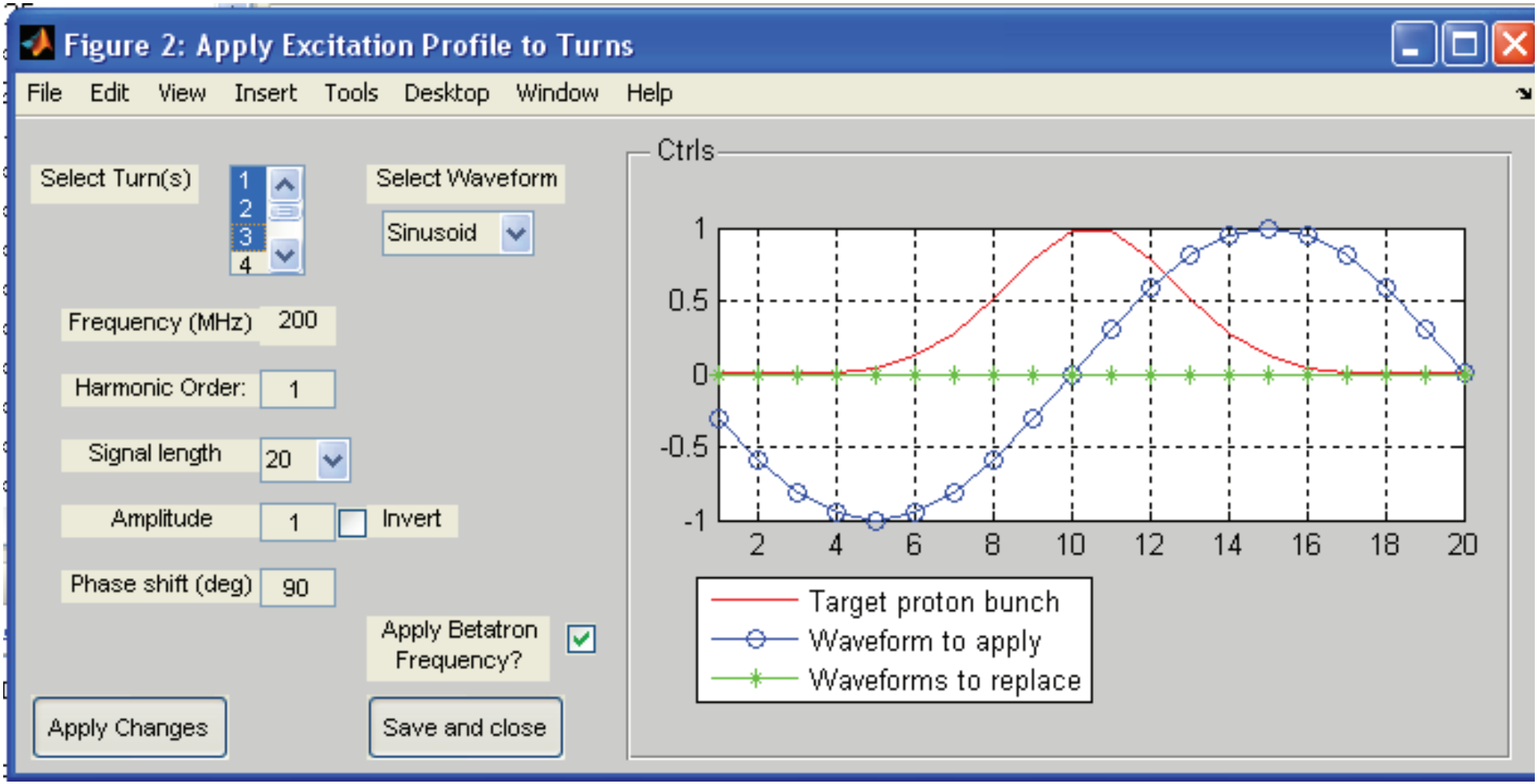

Feedback System: General Considerations

The feedback system has to stabilize the bunch due to the e-cloud induced or TMCI instability for all the operation conditions of the machine (SPS or LHC).

Requirements for the feedback design

- unstable system - minimum gain required for stability
- delay in the control action (limits gain & bandwidth achievable)
- Ecloud - Beam Dynamics is nonlinear. (tunes or resonant frequency, growth rates change intrinsically)
- e-cloud - Beam Dynamics change due to the operation conditions of the machine.
- Beam signals -Vertical information must be separated from longitudinal/horizontal signals, spurious beam signals and external propagating modes in vacuum chamber
- design has to minimize noise injected by the feedback channel to the beam.

Design has trade-offs in partitioning - overall design must optimize individual functions

Receiver sensitivity vs. bandwidth? Horizontal/Vertical isolation

What sorts of Pickups and Kickers are useful? Scale of required amplifier power?

New Wideband Kicker array? Design/development timescale?

Technology development

Can we build a “small” prototype” style feedback channel? What fits in our limited LARP hardware budget? what to do in 2011? 2012?

Idea - build 4 GS/sec. channel around

2 Maxim MAX109EVkit A/D evaluation boards

- 4/8 wide multiplexing, so 500 MHz sample rates?

SLAC-developed Vertex 6 FPGA parallel-processing

- digital I/O, 8 way raw parallelism

1Maxim 19693 D/A evaluation board

RF harmonic multiplier -> sampling from SPS RF

Tunnel “cart” power amps, loads, diagnostics, etc.)

We have the A/D, D/A Evaluation boards, plus Virtex6 Evaluation board and tools.

2011 Use existing exponential striplines for kicker

Critical Issue - Design of Full-bandwidth Kicker

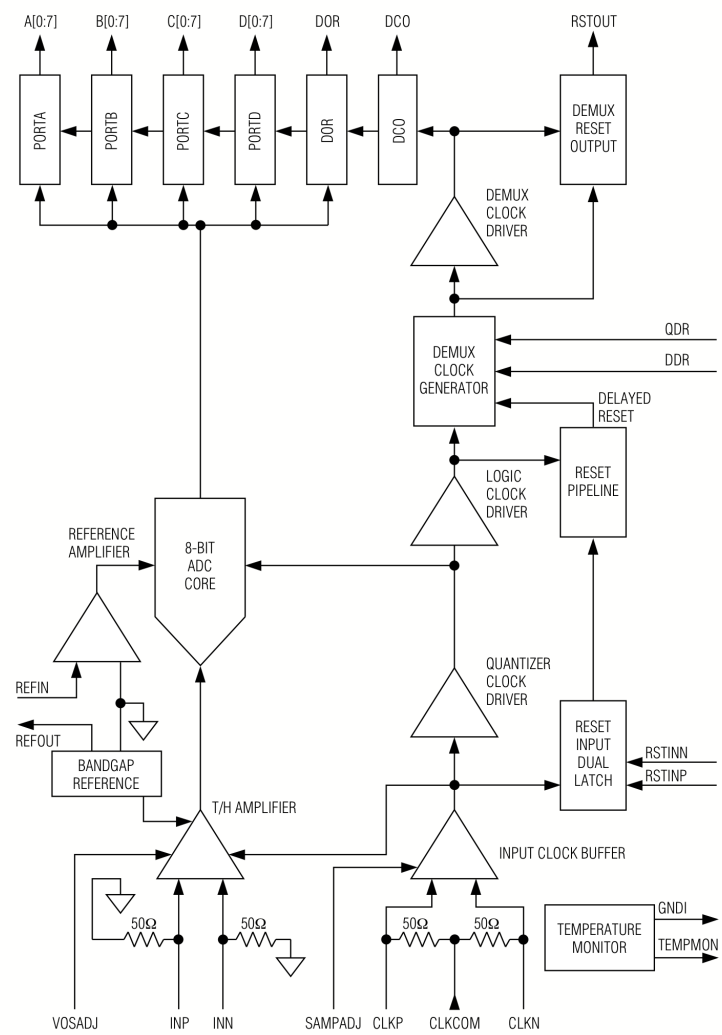

ctional Diagram of the MAX109

MAXIM 109 2.2 GS/sec. A/D

Design study - 4 Gs/sec. 1 stack SPS feedback channel

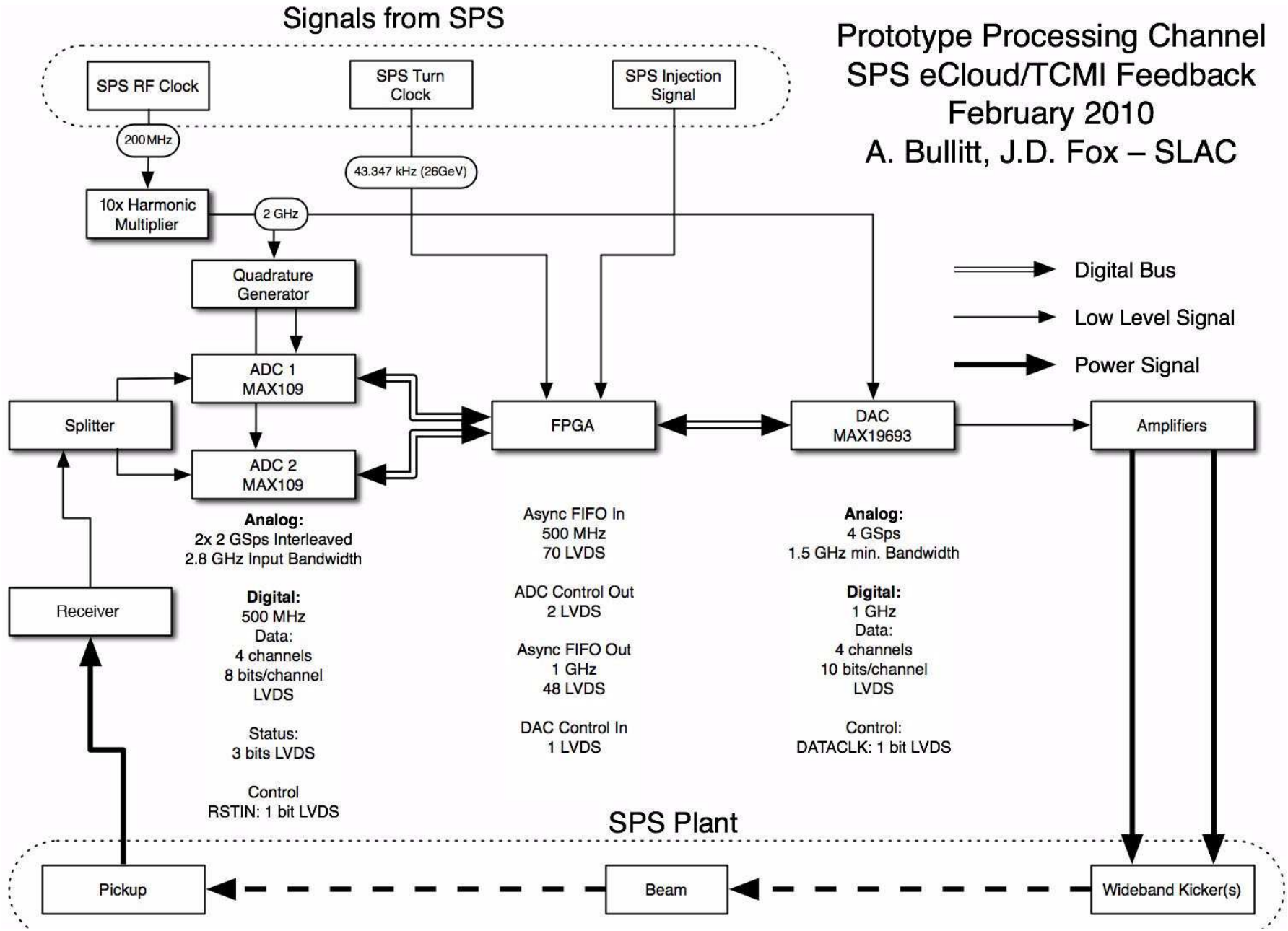

Design study - 4 Gs/sec. 1 stack SPS feedback channel

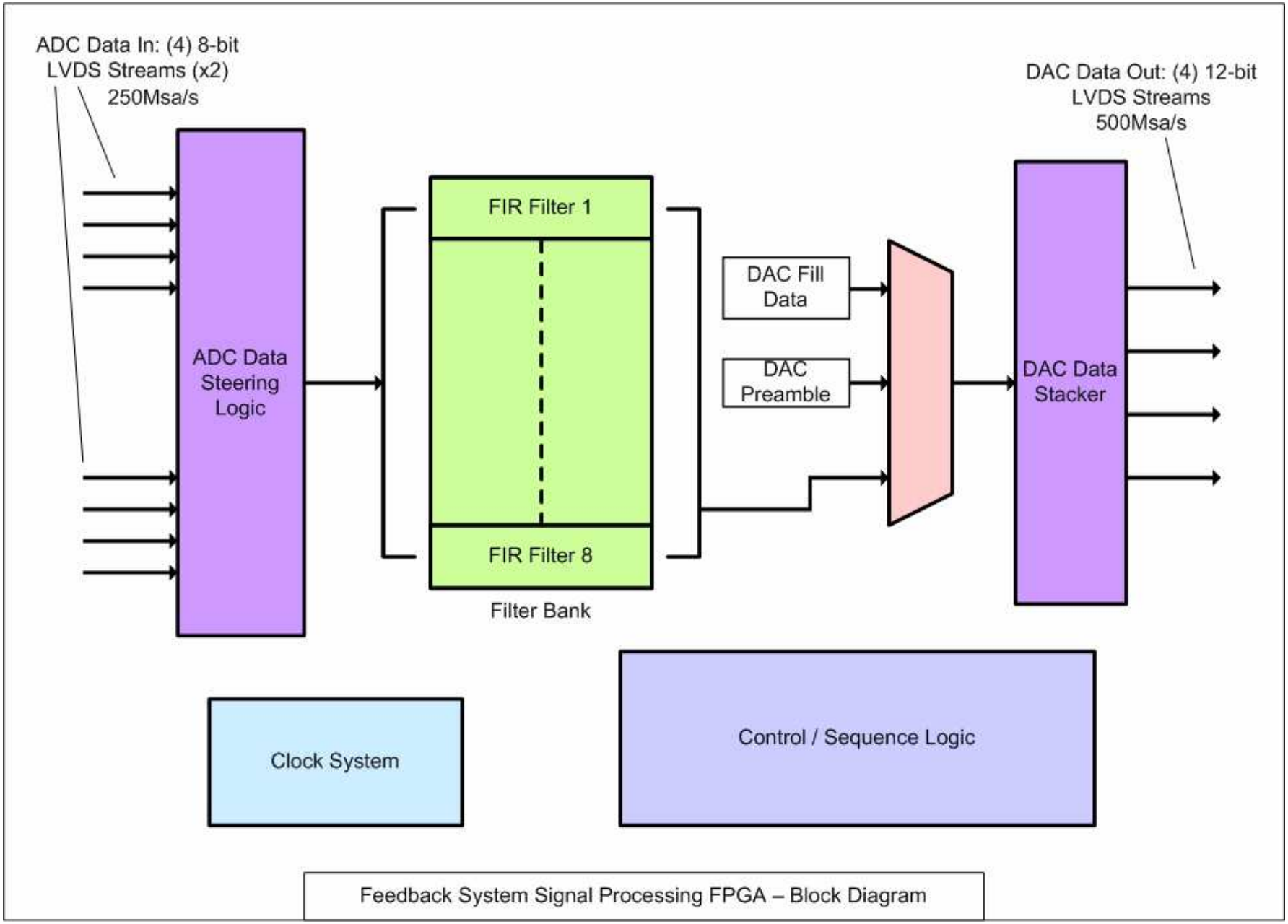

Kicker Options - Design Study

FY2011 effort (0.3 FTE)

Goals - evaluate three potential options

- Stripline (arrays? tapered? Staggered in Frequency?)
- Overdamped Cavity (transverse mode)
- Meander and Slot Line (similar to stochastic cooling kickers)

Comparisons, evaluations based on shunt impedance, bandwidth, overall complexity

Based on bandwidth, kick requirements from Feedback models, measurements - select path for fab

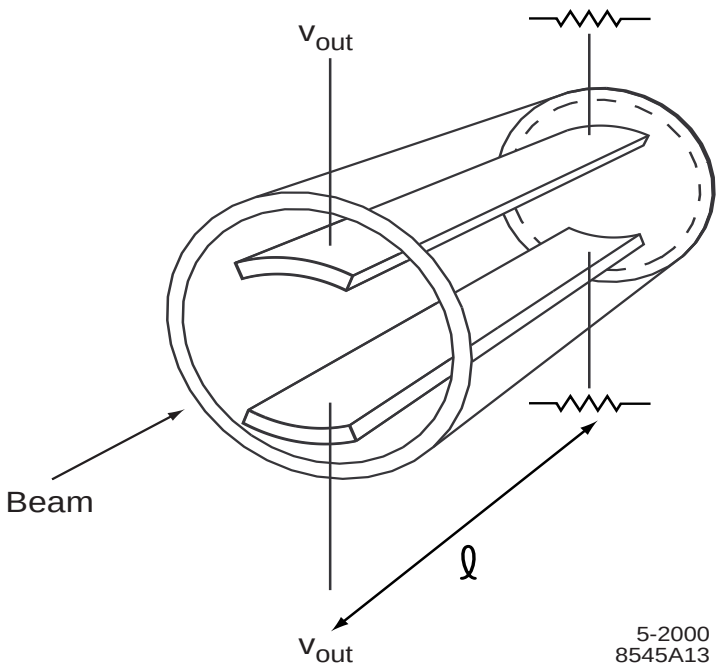

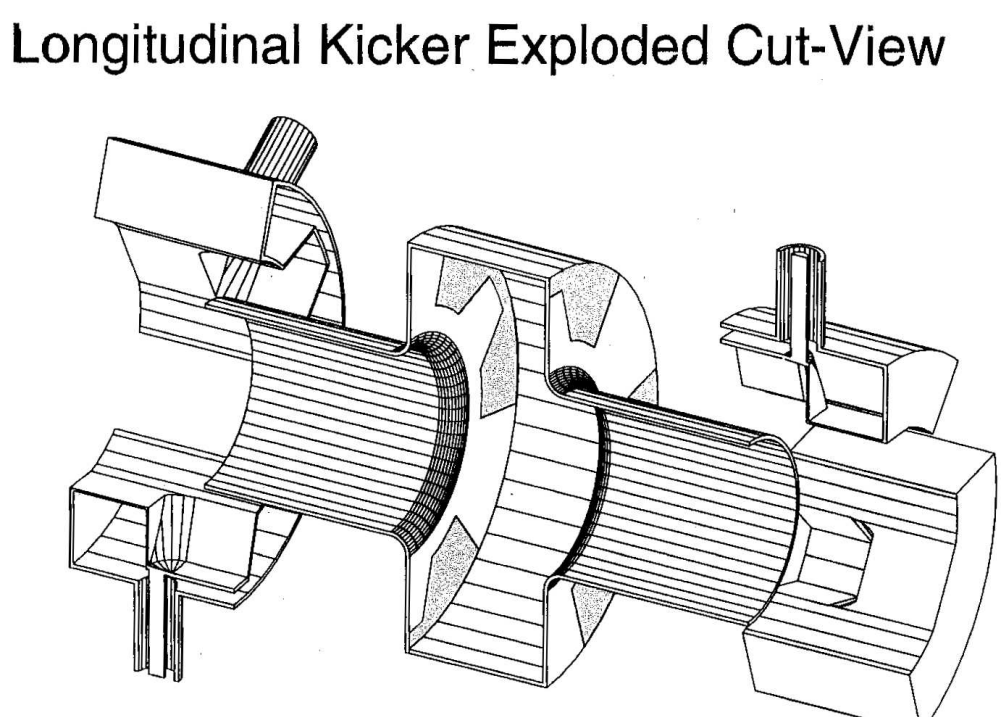

Example stripline - For 5 CM electrodes, 20 mm stay clear

Transverse momentum change and Shunt Impedance

$$\Delta p_{\perp} = 2\frac{e}{c}V_{\Delta}\frac{\ell}{h/2}$$

*V_{Δ} is the total voltage difference between the two kicker's plates. Transverse momentum change is therefore about equal to 3.3 x 10^{-8} (eV s m^{-1}) multiplied the single plate voltage. A reasonable target could be **3.3 x 10^{-5}** (Raffaello) , whick means ±500V, i.e. V_{Δ} = 1kV.*

$$R_s(\omega) = 2Z_c\left(\frac{\ell}{g(h/2)}\right)^2\left[\frac{\sin\left(\frac{\omega}{c}\ell\right)}{\left(\frac{\omega}{c}\ell\right)}\right]^2$$

(coverage factor g ≈ 0.9, Z_c = 50 Ω)

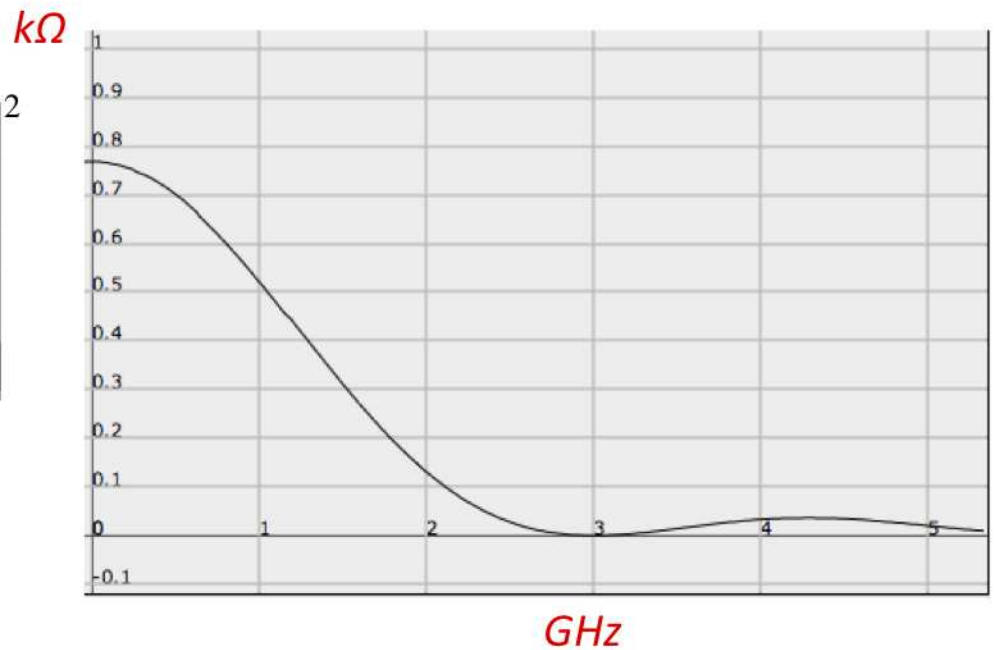

Example stripline - For 5 CM electrodes, 20 mm stay clear

Peak and Average Power Dissipation per plate

$$P_{\max} = \frac{(V_\Delta/2)^2}{R_s}$$

$$P_{avg} = P_{\max} 2 t_s f_{rep} \approx 0.03 \cdot P_{\max}$$

Frequency (MHz)	Pmax (W)	Pavg (W)
DC	330	10
500	360	11
1000	480	15

- Series of striplines, each one kicking a slice of bunch at 40 MHz ?
- For a 20 mm stay clear and 120° coverage, outer pipe radius is around 30 mm.

SPS Prototype Feedback Systems - options and direction

Critical missing element - useful high-power kicker and power amplifier components in SPS

- excitation power amplifiers and cable plant in process (- amp cart rolled into tunnel)

Identify the Kicker technology as an accelerated research item, design prototype kicker and vacuum components for SPS fabrication and installation

FY 2011 LARP funded research and design report on Kicker system - 0.3 FTE

- design report, suggested implementation - LBL/SLAC

We think additional FTE effort could help us move towards:

FY2012 - detailed design, test of low power lab models and fab of prototype kicker, vacuum components

FY2013 - installation in SPS with Amplifiers and Cable plant

- The Vacuum components are essential for shutdown, processing electronics is outside the tunnel

Dovetails with parallel system estimation and development of “quick prototype processor”

- Modelling of closed-loop system dynamics, estimation of feedback system specifications
- Evaluation of possible control architectures, possible implementations, technology demonstrations
- SPS Machine Physics studies, development of “small prototype” and closed loop studies

Progress FY2010/2011 LARP Ecloud/TMCI

understand Ecloud , TMCI dynamics via simulations and machine measurements

- Analysis of SPS and LHC beam dynamics studies, comparisons with Ecloud/TMCI models

Modelling, estimation of feedback options and feedback simulation

- extraction of system dynamics, development of reduced (linear) coupled-oscillator model for feedback design estimation
- develop analysis tools to quantify and compare system dynamics
- Initial study of feedforward/feedback techniques to control unstable beam motion, change dynamics. Estimate limits of techniques, applicability to SPS and LHC needs

Lab effort -develop 4 GS/sec. excitation system for SPS

- modify existing system to synchronize with selected bunches - data for system ID tools
- Identify critical technology options, evaluate difficulty of technical implementation
- explore 4 Gs/sec. “small prototype” functional feedback channel for 2011/2012 fab and MD use

Kicker Design Report - in progress

4 PAC papers on Simulation effort, MD data and analysis.

Are We On Track? How is the work Progressing?

Original research plan - Decision Point - late 2010

Is the Ecloud dynamics feasible for feedback control? What techniques are applicable?

Our Conclusion was (is!)- Yes, feasible, but

We don't have experience driving the beam, or a useful kicker design

- 2011 Kicker Design report should suggest a path

4 - 8 GS/sec channel is technically possible

- but we don't know what bandwidth is really required

We don't have good dynamics knowledge, can't say what type of controller is best

- Progress with system estimation, feedback closed loop modelling, use simulations to estimate

Research Goals 2010 - 2012

- Modelling of closed-loop system dynamics, estimation of feedback system specifications
- Evaluation of possible control architectures, possible implementations, technology demonstrations
- Kicker design report, plan for fab of prototype for SPS shutdown installation
- SPS Machine Physics studies, development of "small prototype" and closed loop studies

System development Goals 2012 and beyond

Technology R&D - Specification of wideband feedback system technical components

Technical analysis of options, specification of control system requirements

- Single bunch control (wideband, within bunch Vertical plane)- Required bandwidth?
- Control algorithm - complexity? flexibility? Machine diagnostic techniques?
- Fundamental technology R&D in support of requirements - Kickers and pickups?
- wideband RF instrumentation, high-speed digital signal processing

Develop proof of principle processing system, evaluate with machine measurements

System Design Proposal and technical implementation/construction project plan

Plans 2012 - 2013

Develop a technology demonstrator prototype and prototype wideband kicker

- functionality to test feedback techniques on a subset of bunches, evaluate options

We will learn from a limited “quick” prototype at the SPS

Can then confidently design a true operational system for SPS and LHC

Recent Publications and Talks from the LARP Ecloud Effort

Mathematical Models of Feedback systems for Control of Intra-Bunch Instabilities Driven by Eclouds and TMCI - C. Rivetta, et al. PAC 11

Simulation Results of a Feedback Contreol System to Damp Electron Cloud Single-Bunch Transverse Instabilities in the CERN SPS - R. Secondo, et al. PAC 11

Direct Numerical Modeling of E-Cloud Driven Instabilitty of a Bunch Train in the CERN SPS J-L Vay, et al. PAC 11

Estimation of Ecloud and TMCI Driven Vertical Instability Dynamics from SPS MD Measurements - Implications for Feedback Control - O. Turgut, et al PAC 11

Control of Transverse Intra-Bunch Instabilities using GHz Bandwidth Feedback Techniques. - Claudio Rivetta (SLAC National Accelerator Laboratory) Presented at the Ecloud 2010 ICFA workshop, Ithaca NY Oct 2010

Numerical Modeling of E-Cloud Driven Instability and its Mitigation using a Simulated Feedback System in the CERN SPS - Jean-Luc Vay (LBNL) Presented at the Ecloud 2010 ICFA workshop, Ithaca NY Oct 2010

Simulated Performance of an FIR-Based Feedback System to Control the Electron Cloud Single-Bunch Transverse Instabilities in the CERN SPS - RAFFAELLO SECONDO (LBNL) Presented at the Ecloud 2010 ICFA workshop, Ithaca NY Oct 2010

Simulation of E-Cloud Driven Instability and its Attenuation using a Feedback System in the CERN SPS J.-L. Vay, J.M. Byrd, M.A. Furman, G. Penn, R. Secondo, M. Venturini LBNL, Berkeley, California J.D. Fox, C.H. Rivetta SLAC, Menlo Park, California Presented at International Particle Accelerator Conference (IPAC 10), Kyoto Japan May 2010

SPS Ecloud Instabilities - Analysis of Machine Studies and Implications for Ecloud Feedback J.D. Fox, A. Bullitt, T. Mastorides, G. Ndabashimiye, C.H. Rivetta, O. Turgut, D. Van Winkle SLAC, Menlo Park, California J.M. Byrd, M.A. Furman, J.-L. Vay LBNL, Berkeley, California R. De Maria BNL, Upton, Long Island, New York W. Höfle, G. Rumolo CERN, Geneva Presented at International Particle Accelerator Conference (IPAC 10), Kyoto Japan May 2010

Feedback Techniques and Ecloud Instabilities - Design Estimates. J.D. Fox, T. Mastorides, G. Ndabashimiye, C. Rivetta, D.Van Winkle (SLAC), J. Byrd, J-L Vay (LBL, Berkeley), W. Hofle, G. Rumolo (CERN), R.De Maria (Brookhaven). SLAC-PUB-13634, May 18, 2009. 4pp. Presented at Particle Accelerator Conference (PAC 09), Vancouver, BC, Canada, 4-8 May 2009.

Simulation of a Feedback System for the Attenuation of E-Cloud Driven Instability Jean-Luc Vay, John Byrd, Miguel Furman, Marco Venturini (LBNL, Berkeley, California), John Fox (SLAC, Menlo Park, California) Presented at Particle Accelerator Conference (PAC 09), Vancouver, BC, Canada, 4-8 May 2009

INITIAL RESULTS OF SIMULATION OF A DAMPING SYSTEM FOR ELECTRON CLOUD-DRIVEN INSTABILITIES IN THE CERN SPS J. R. Thompson, Cornell University, Ithaca, USA, J. M. Byrd, LBNL, Berkeley, USA W. Hofle, G. Rumolo, CERN, Geneva, Switzerland Presented at Particle Accelerator Conference (PAC 09), Vancouver, BC, Canada, 4-8 May 2009.

Performance of Exponential Coupler in the SPS with LHC Type Beam for Transverse Broadband Instability Analysis 1 R. de Maria BNL, Upton, Long Island, New York, J. D. Fox SLAC, Menlo Park, California, W. Hofle, G. Kotzian, G. Rumolo, B. Salvant, U. Wehrle CERN, Geneva Presented at DIPAC 09 May 2009

WEBEX **Ecloud Feedback mini-workshop** August 2009 (joint with SLAC, CERN, BNL, LBL and Cornell)

Feedback Control of Ecloud Instabilities, J. Fox et al CERN Electron Cloud Mitigation Workshop 08

E-cloud feedback activities for the SPS and LHC, W. Hofle CERN Electron Cloud Mitigation Workshop 08

Observations of SPS e-cloud instability with exponential pickup, R. De Maria, CERN Electron Cloud Mitigation Workshop 08

Experiments on SPS e-cloud instability Giovanni Rumolo, CERN Electron Cloud Mitigation Workshop 08

Progress on WARP and code benchmarking Marco Venturini, CERN Electron Cloud Mitigation Workshop 08

Ecloud and Feedback - Progress and Ideas, J. Fox Et al LARP CM12 Collaboration meeting Napa CA, CM13 meeting Port Jefferson L

System Identification via excitation response

Recent effort - Ozhan Turgut

Use a reduced coupled oscillator model (finite # of "slices" of order 8 - 16 corresponding to 4 Gs/sec. sampling)

Excite model (or real machine, or non-linear simulation) with shaped noise

fit model parameters to response, use reduced model for feedback design.

System Identification

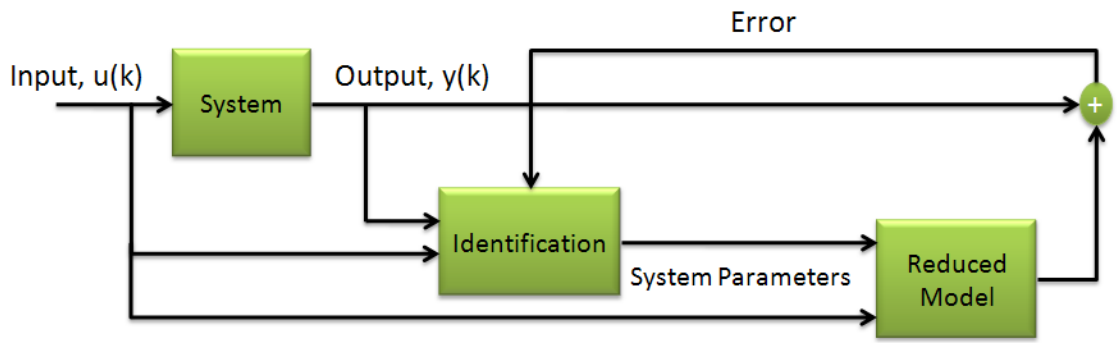

$$x(k+1) = A(kT)x(k) + B(kT)u(k)$$
$$y(k) = C(kT)x(k) + D(kT)u(k)$$

This model fits "all" parameters from inputs to outputs (e.g. oscillator center frequency, Q, complex coupling constant), and it is a time-invariant system. Doesn't know physics of Ecloud or TMCI

Our problem is time-varying - approach?

Divide time interval into sections? Full non-linear or parametric approach?

Closed-Loop feedback around the Model

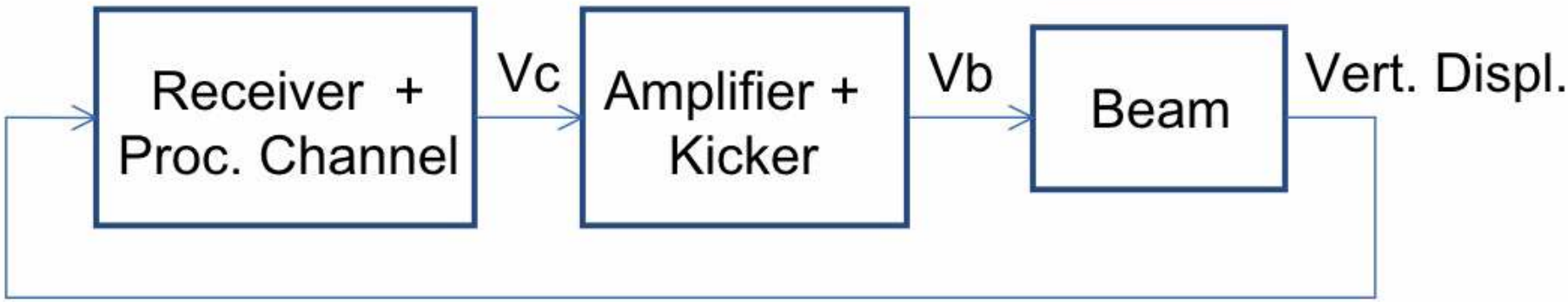

Use the reduced model, with realistic feedback delays and design a simple FIR controller

Each ‘slice” is an independent controller

This example 5 tap filter has broad bandwidth - little separation of horizontal and vertical tunes.

But what would it do with the beam? How can we estimate performance?

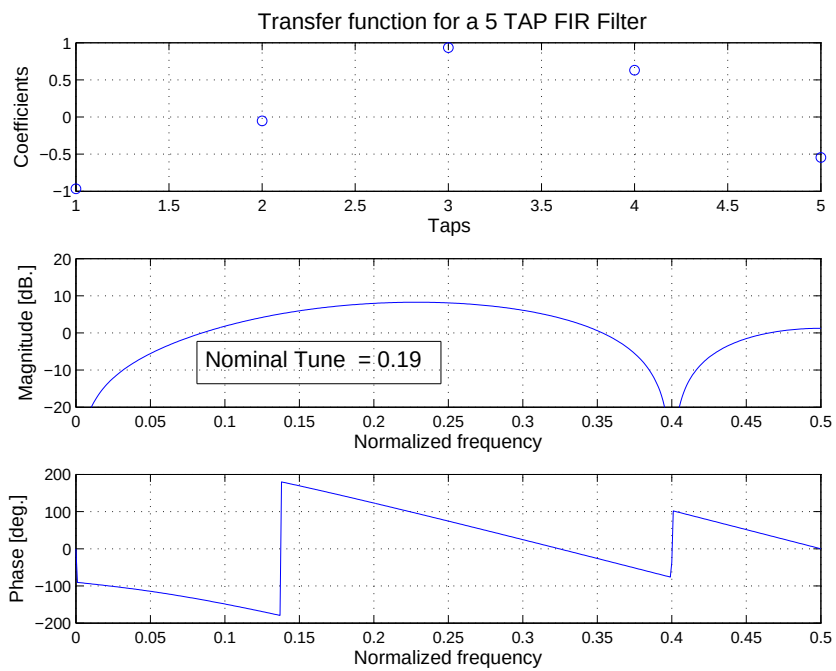

Feedback Channel - Complexity? Scale?

Frequency spectrograms suggest:

sampling rate of 2 - 4 GS/sec. (Nyquist limited sampling of the most unstable modes)

Scale of the numeric complexity in the DSP processing filter

- measured in Multiply/Accumulate operations (MACs)/sec.

SPS -5 GigaMacs/sec. (6*72*16*16*43kHz)

- 16 samples/bunch per turn, 72 bunches/stack, 6 stacks/turn, 43 kHz revolution frequency
- 16 tap filter (each slice)

KEKB (existing iGp system) - 8 GigaMacs/sec.

- 1 sample/bunch per turn, 5120 bunches, 16 tap filters, 99 kHz revolution frequency.

The scale of an FIR based control filter using the single-slice diagonal controller model is not very different than that achieved to date with the coupled-bunch systems.

What is different is the required sampling rate and bandwidths of the pickup, kicker structures, plus the need to have very high instantaneous data rates, though the average data rates may be comparable.

Analysis of Ecloud simulations, Ecloud MD data, TMCI MD data

Time domain simulations, measurements - necessary to estimate feedback requirements

- What frequencies are present in the bunch structure?
- How do they evolve over the time sequence? Does the dynamics of the system change with time?
- Are there useful correlations between parts of the bunch, other bunches?
- How does the filling pattern, energy, machine parameters impact the unstable motion?

Observations

- tune shifts within bunch due to Ecloud, bursting, positions of unstable bunches in trains
- information in SUM signal - important charge measurement (TMCI charge loss)
- frequencies within bunch - estimated bandwidth of instability signal, correction signal
- Growth rates of eigenmodes - initial fits and stability observations, gain requirements

Simulations - have access to all the beam data, but what effects are not included?

Machine measurements - what can we measure? with what resolution? What beam conditions?

MD Studies

Ecloud studies June 2009, April 2010 July 2010. Vertical Instability develops after injection of second batch, within 100 turns. Time domain shows bunch charge, and transverse displacement 1E11 p/bunch (June2009). Roughly 25 slices (250 ps) between displacement maxima and minima

TMCI Studies July/August 2010. Single bunch injection at 1.3E11 (3E11). Vertical instability develops - time scales of 1000 turns

We need MD data to compare beam simulations and dynamics models, - extract beam dynamics necessary to design feedback.

April 2010 - characterize existing SPS pickups and drive tapered pickup as kicker

pickups -Noise, transverse resolution well-quantified

Kicker and Beam Excitation, mixed results
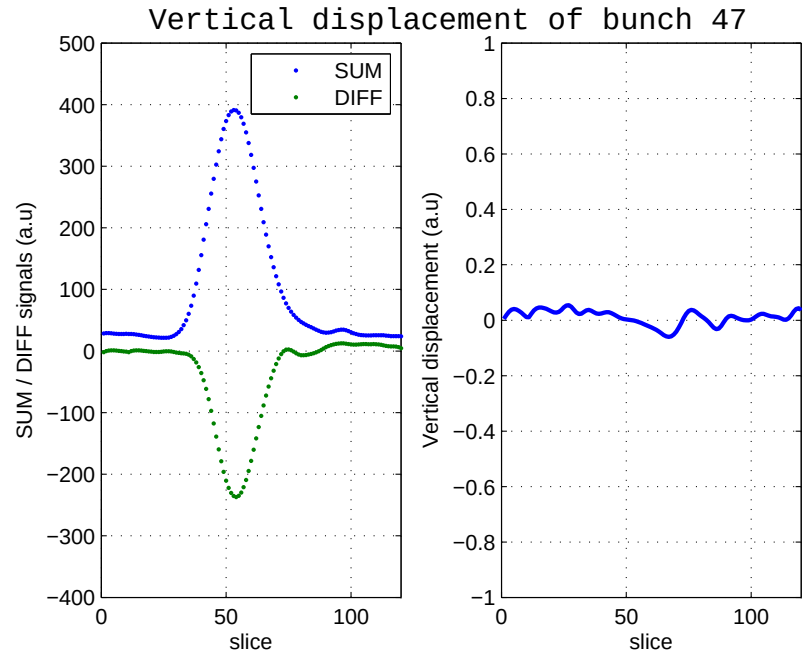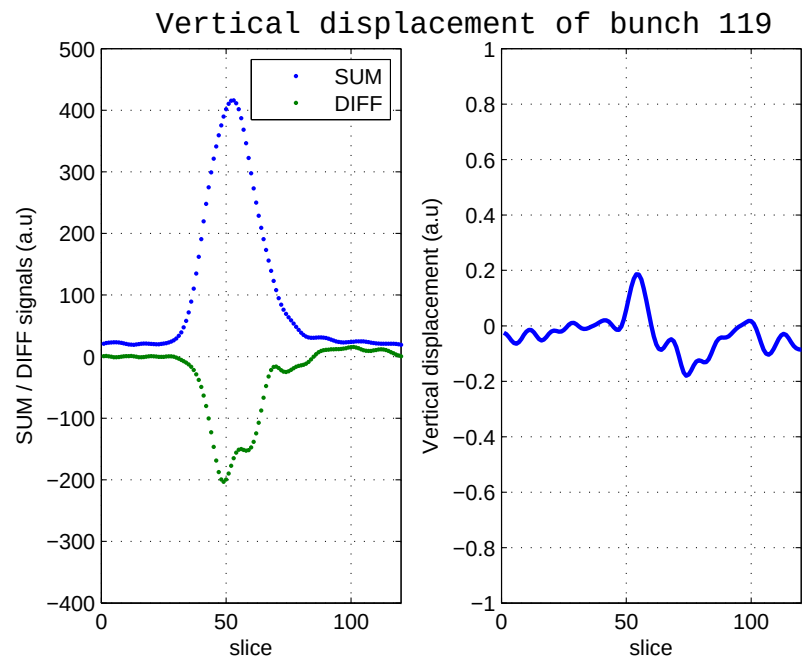
difficult to excite measurable response