Tuner, Design, Analysis, Optimization

Dr. Sergey Cheban

650 MHz Tuner FDR

31st July 2020

A Partnership of:

- US/DOE
- India/DAE
- Italy/INFN
- UK/UKRI-STFC
- France/CEA, CNRS/IN2P3
- Poland/WUST

TUNER B92 VS B90

Name	Weight (kg)
ASSEMBLY, LEVER TUNER 650-B92 CAVITY	42.7122

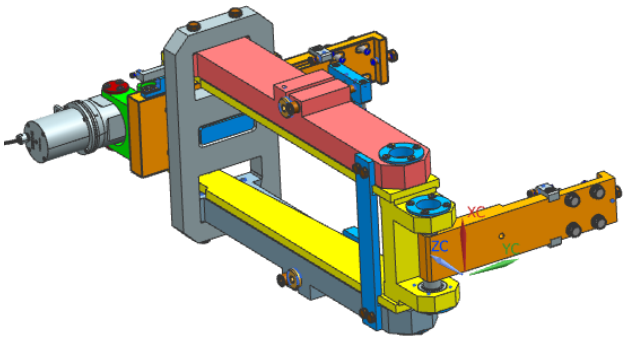

Name	Weigh...
ASSEMBLY, LEVER TUNER B09 650 CAVITY	61.5253

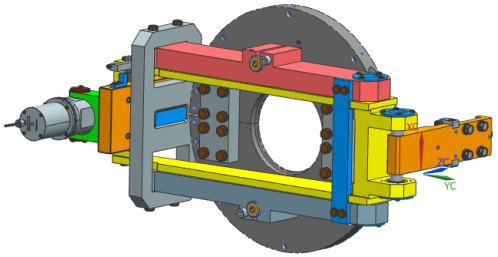

Name	N	Weight (kg)
DRESSED CAVITY ASSEMBLY, 650MHz, BETA=0.92		136.6513

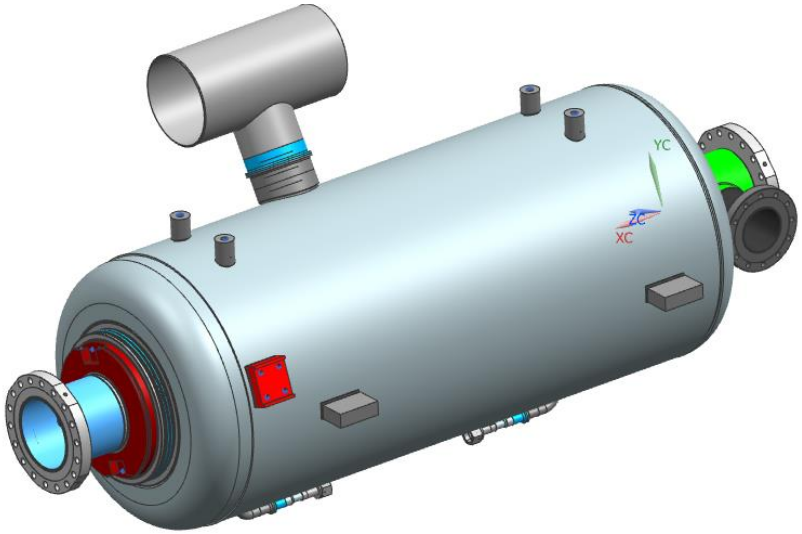

Name	Weight (kg)	Number
HB650 0.9 DRESSED CAVITY ASSEMBLY FOR CRYO...	118.8259	F10124342

TUNER B92 VS B90

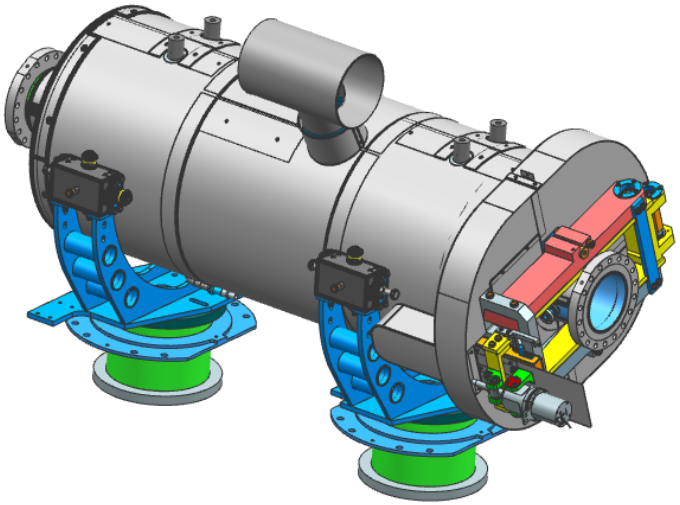

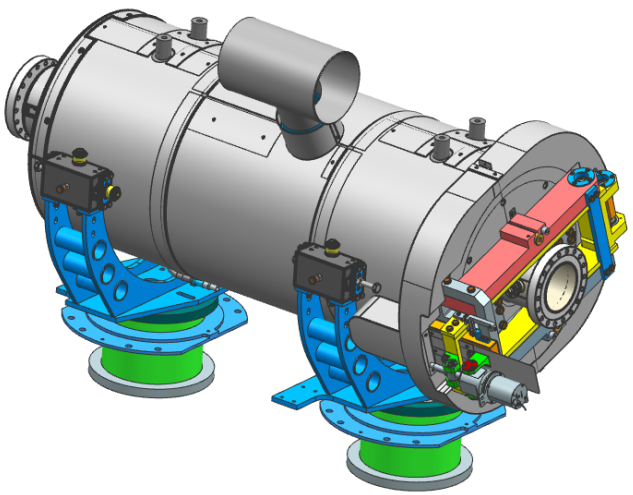

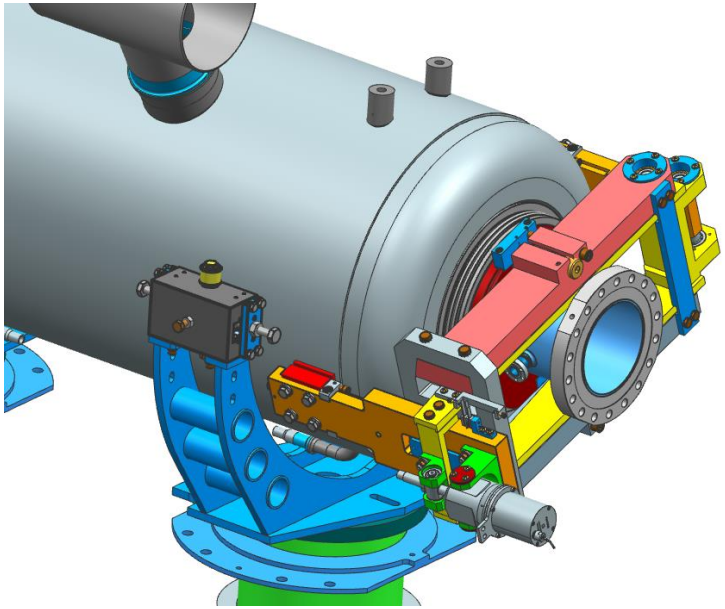

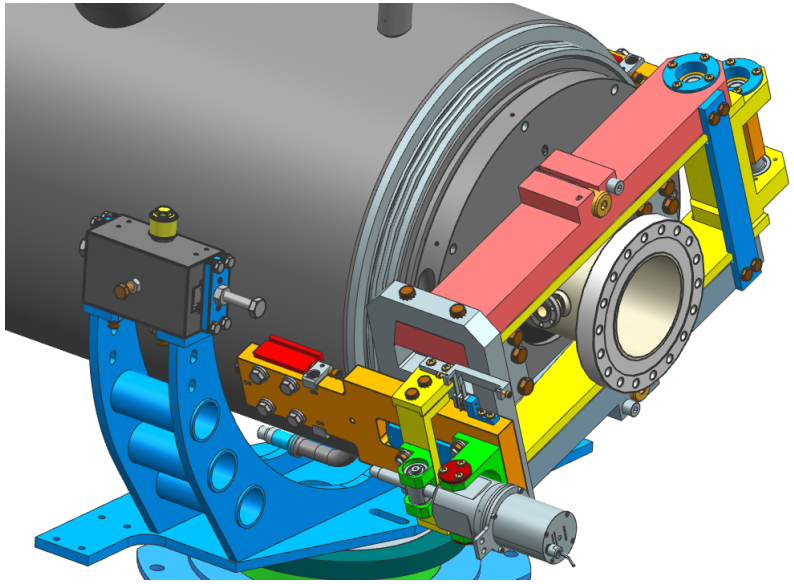

TUNER B92 VS LCLSII

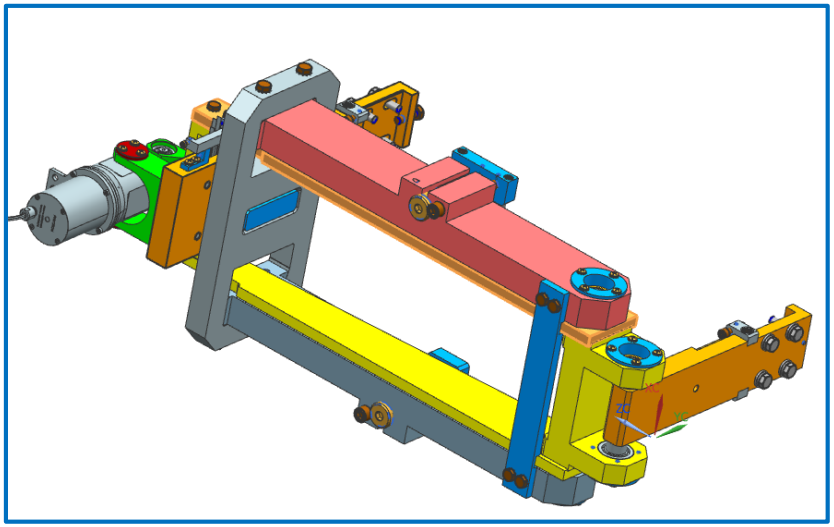

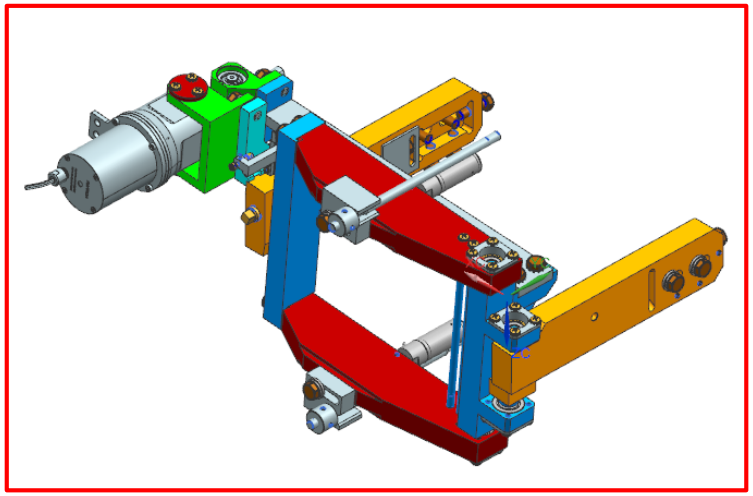

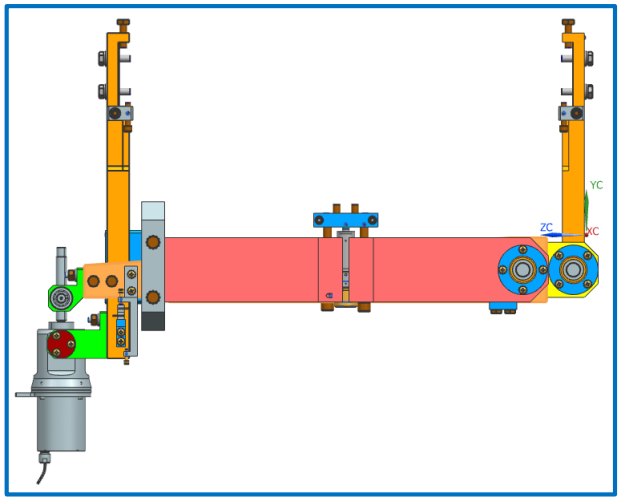

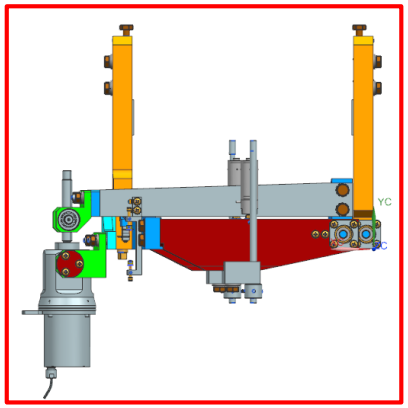

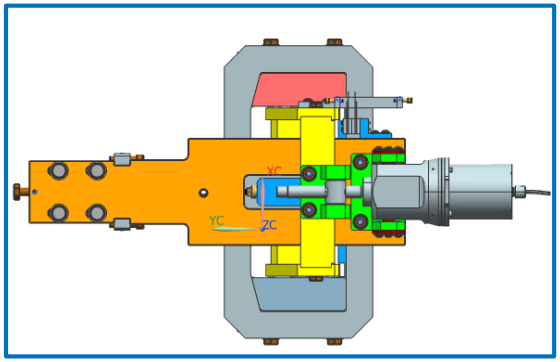

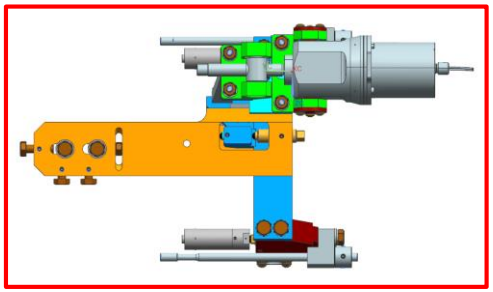

TUNER SCHEME

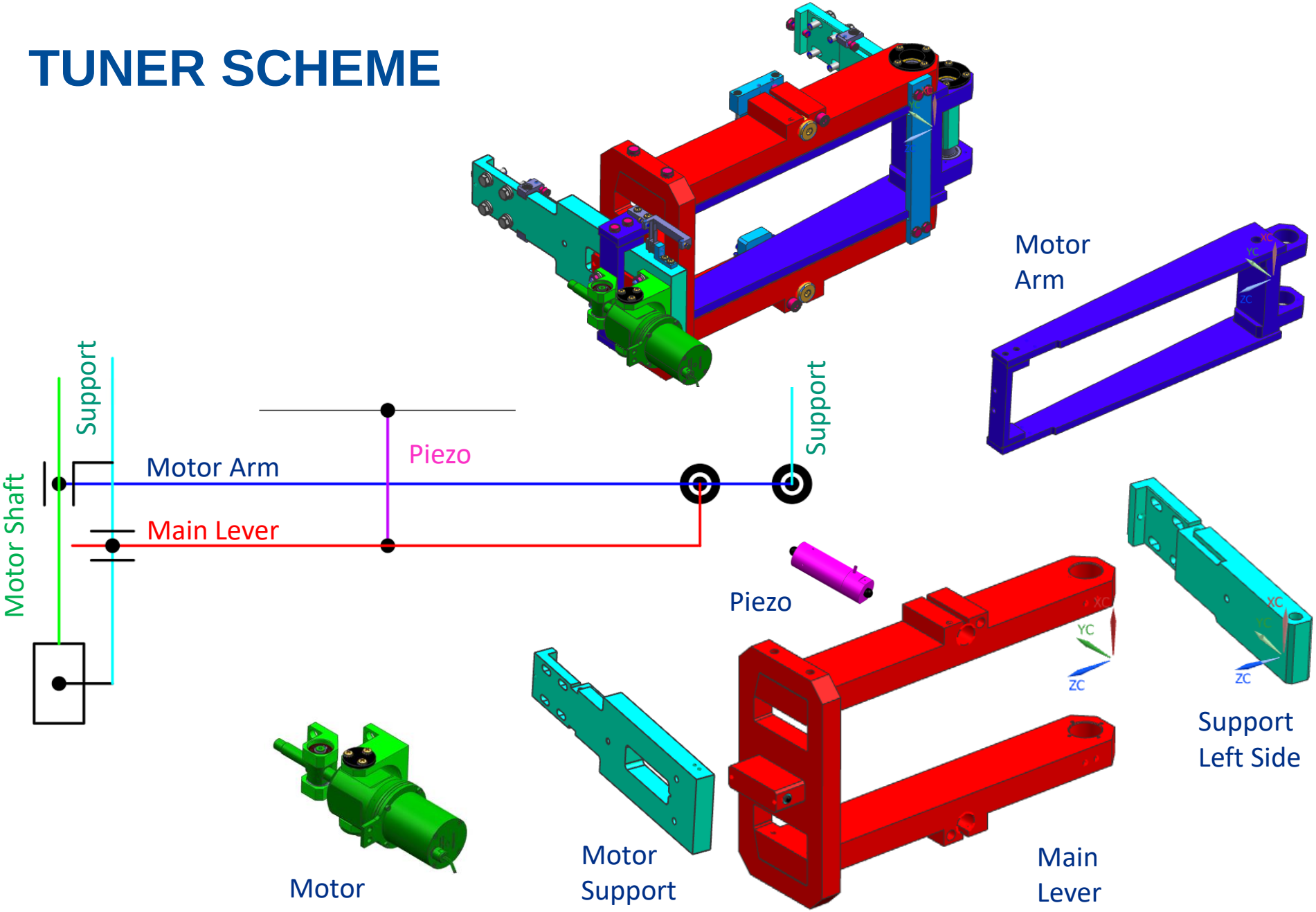

TUNER SCHEME

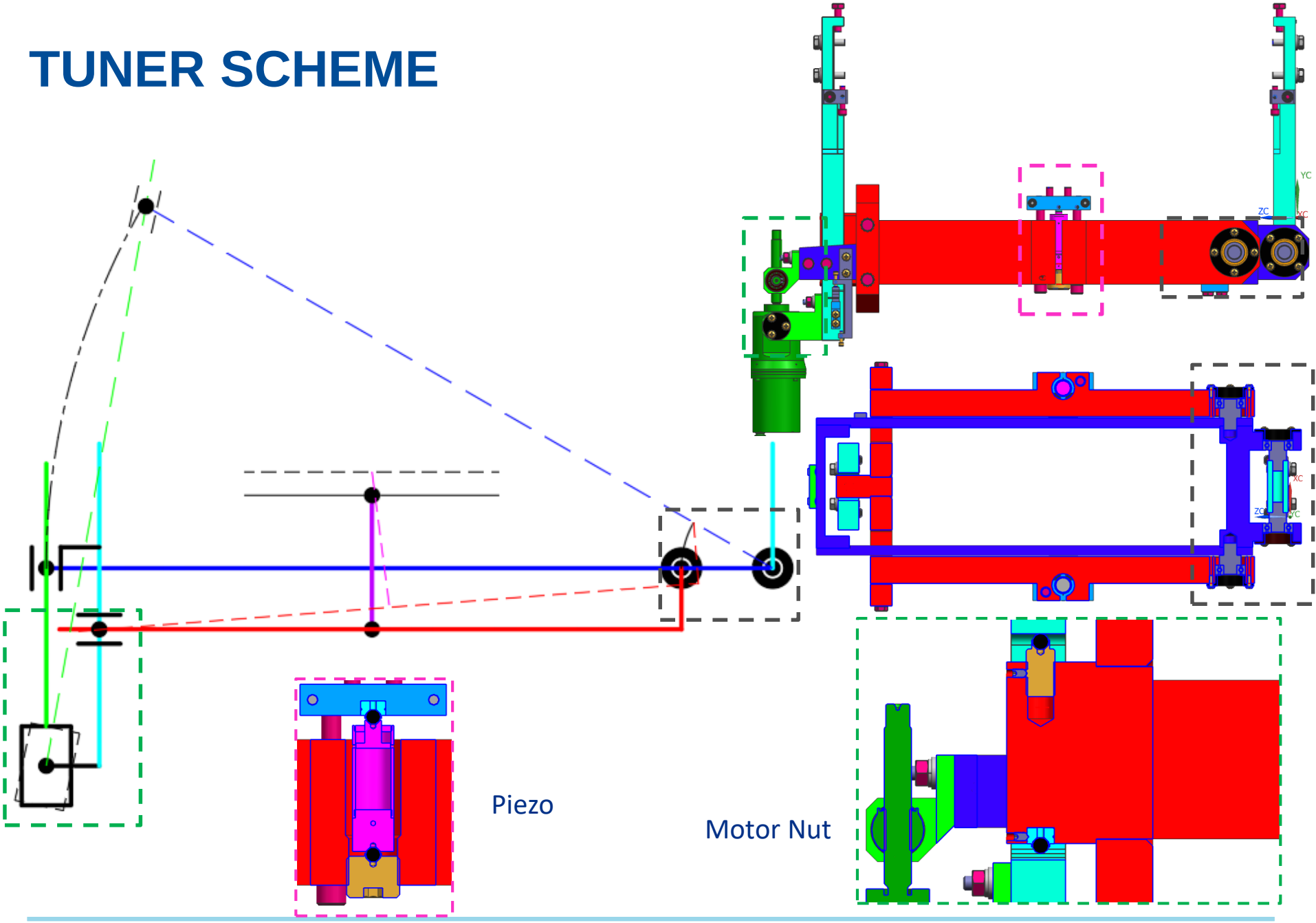

TUNER SCHEME

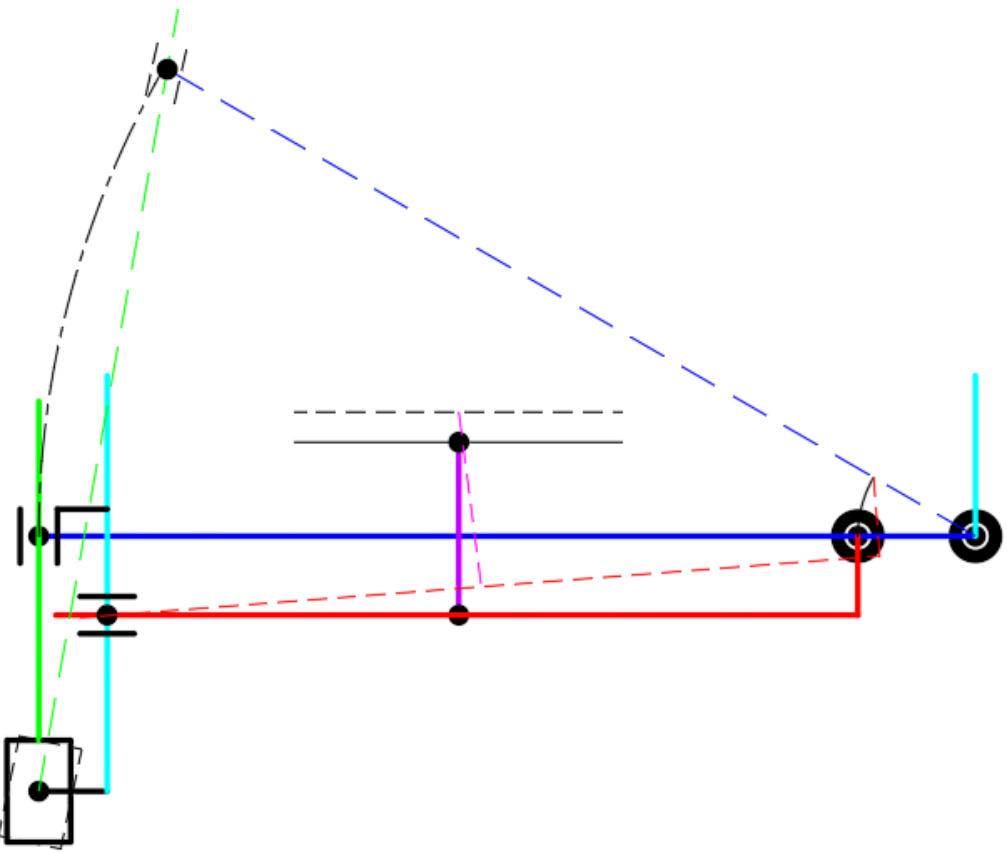

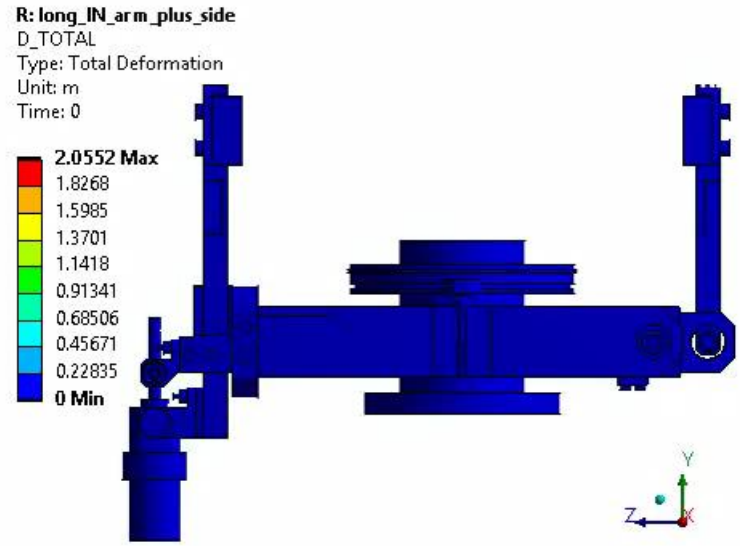

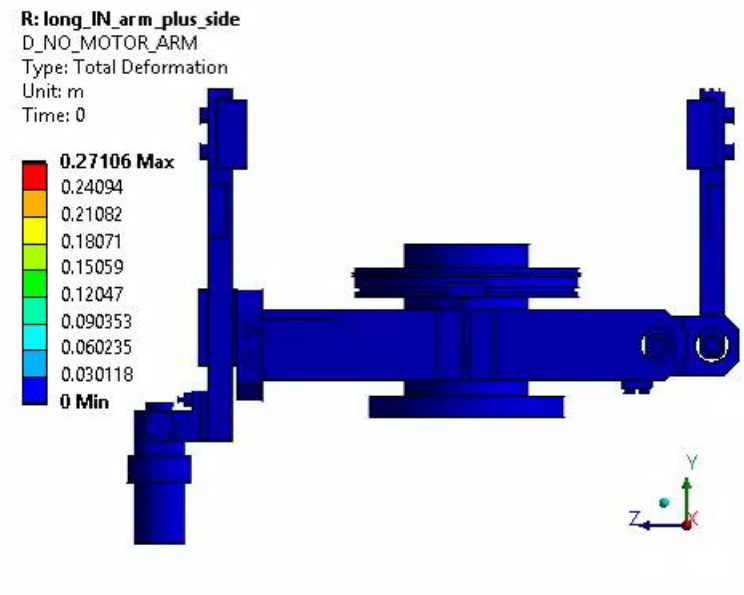

TUNER INTERFACE B92

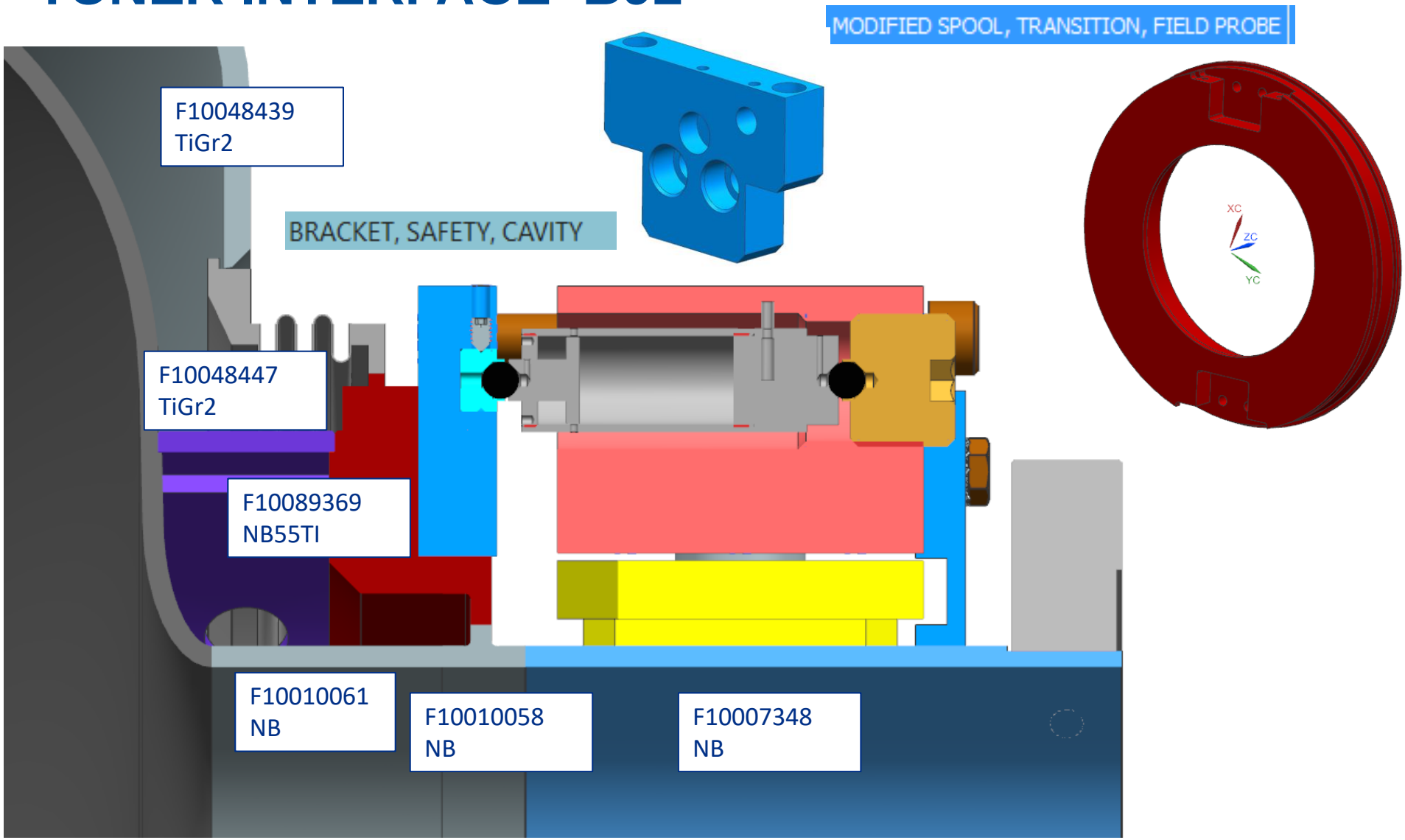

TUNER INTERFACE B90

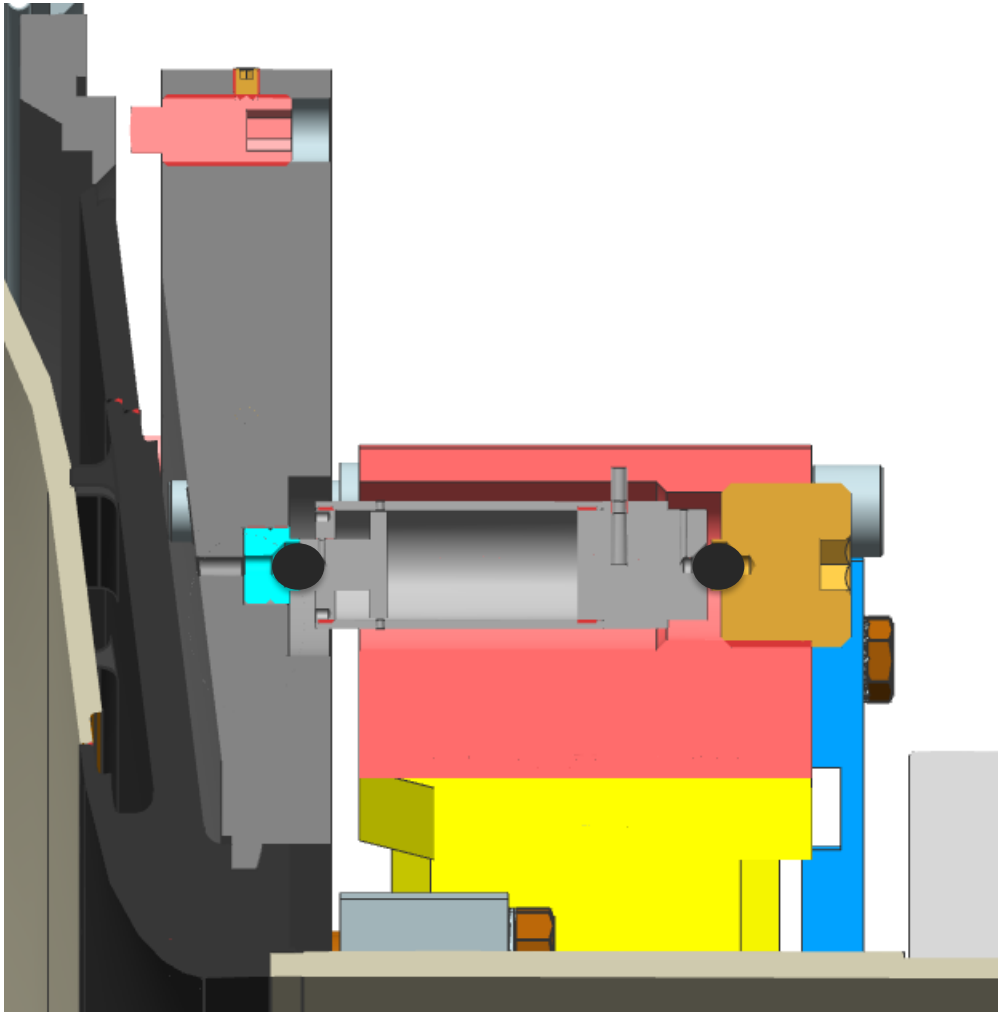

SPLIT RING KIT

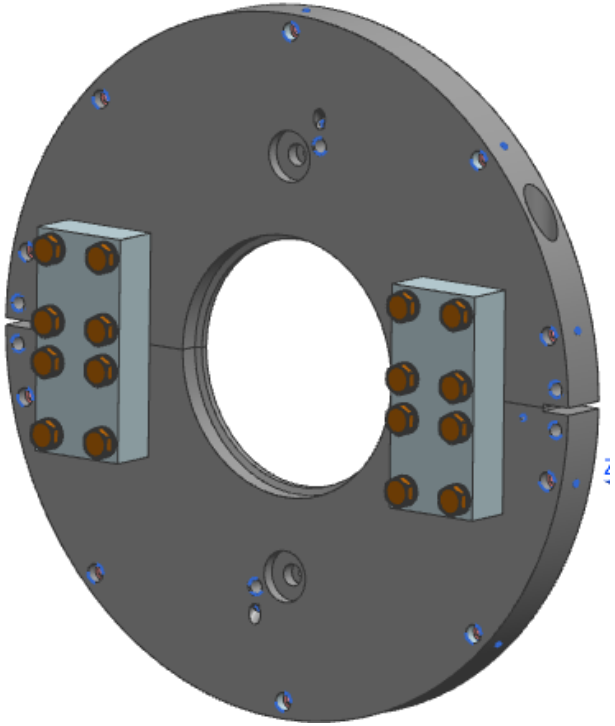

TUNER B90 VS B92

F10088713--;... | PLATE, MOTOR SUPPORT

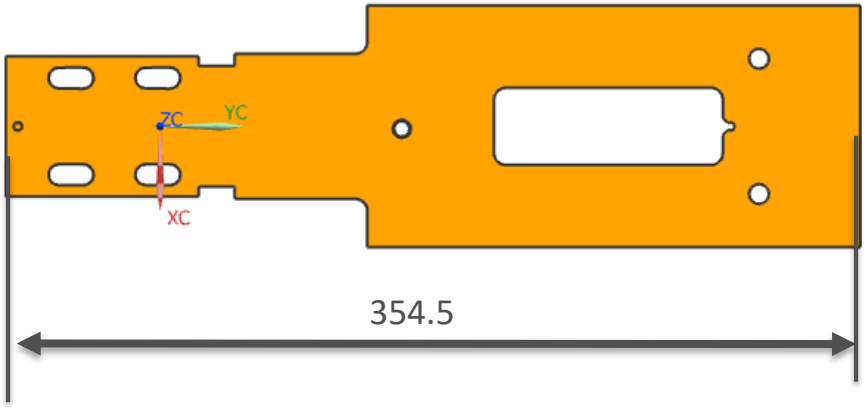

F10112534-A;1... | PLATE, MOTOR SUPPORT_1

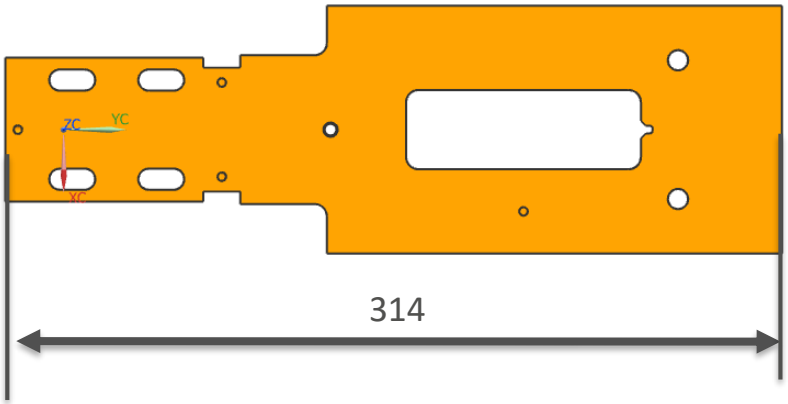

F10006848-... | PLATE, TUNER SUPPORT LEFT SIDE

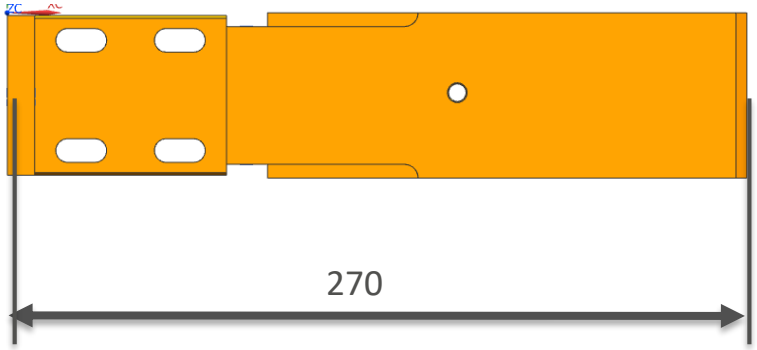

F10112735-... | PLATE, TUNER SUPPORT

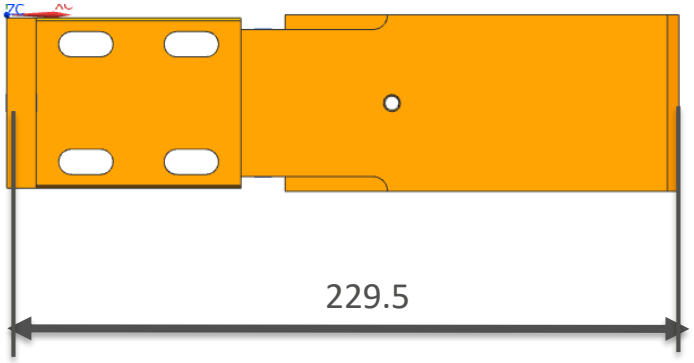

TUNER INTERFACE B92

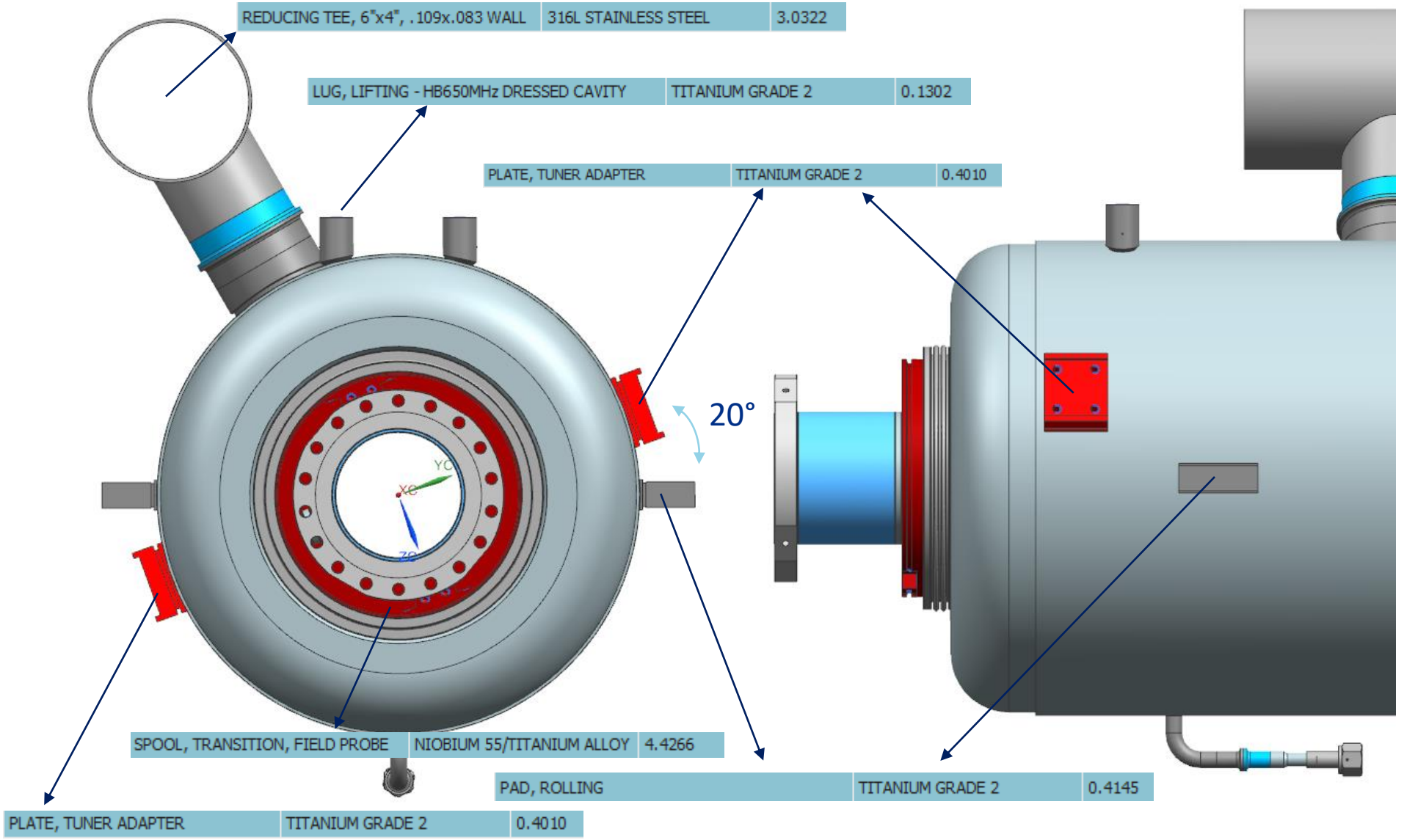

TUNER INTERFACE

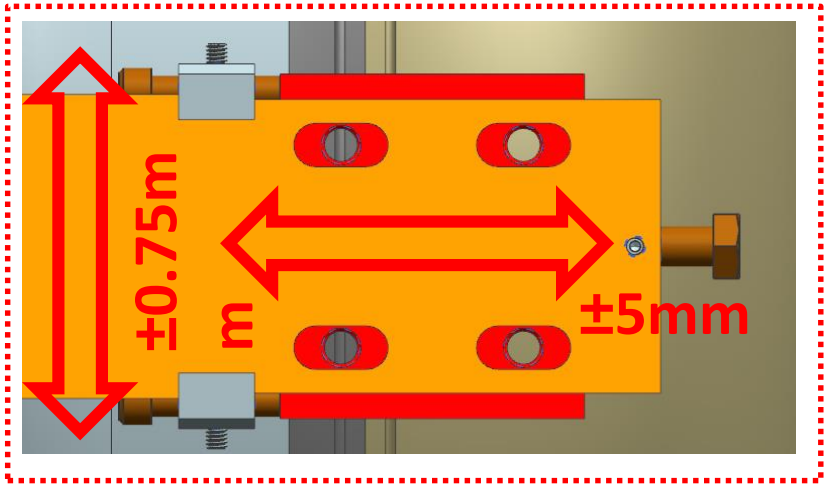

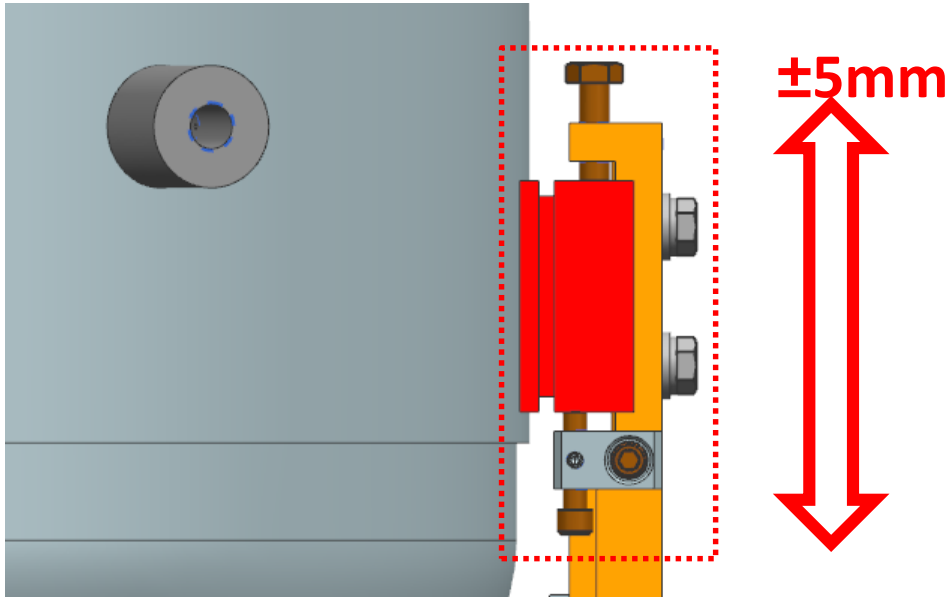

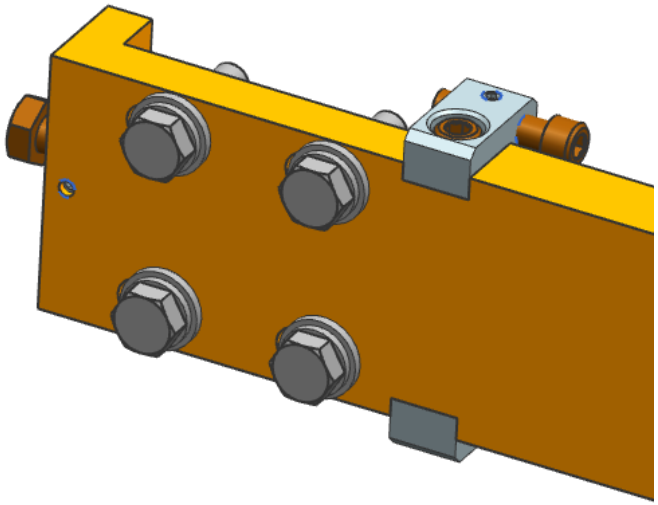

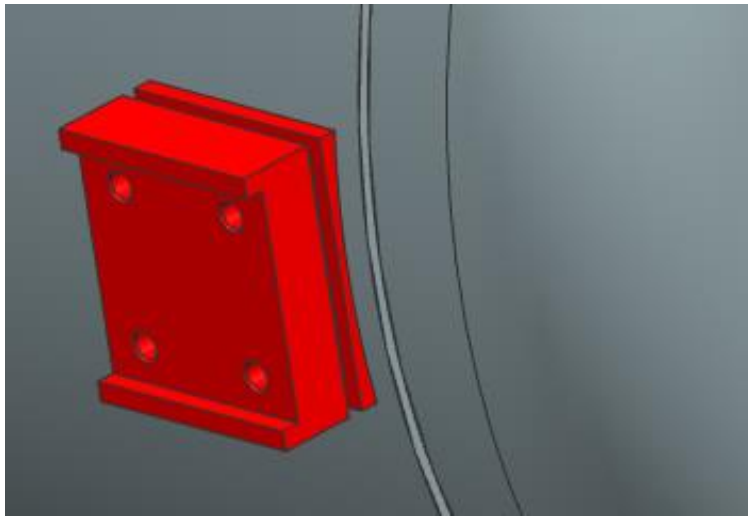

TUNER B92

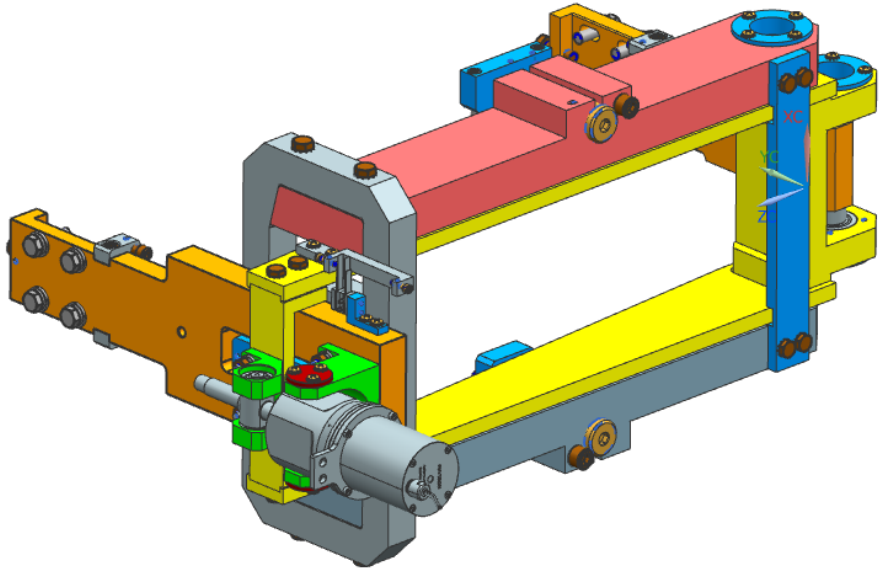

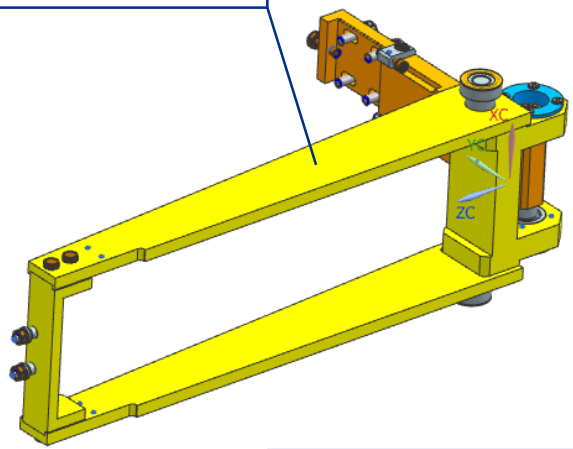

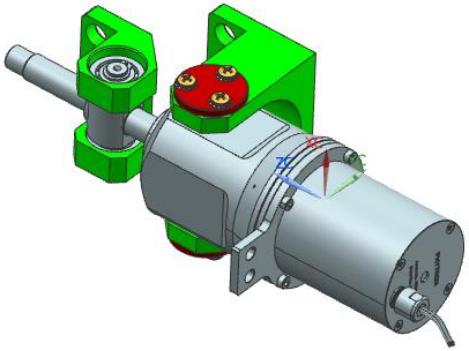

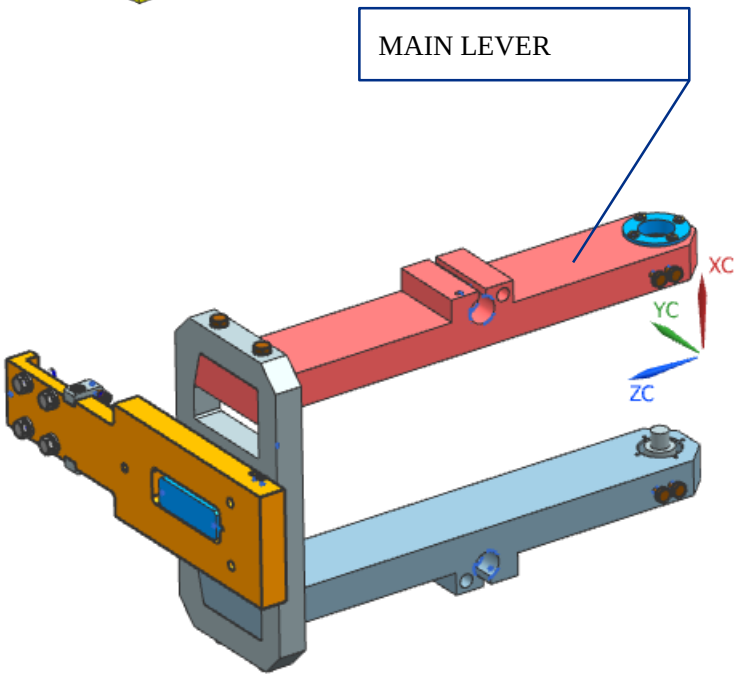

TUNER B92

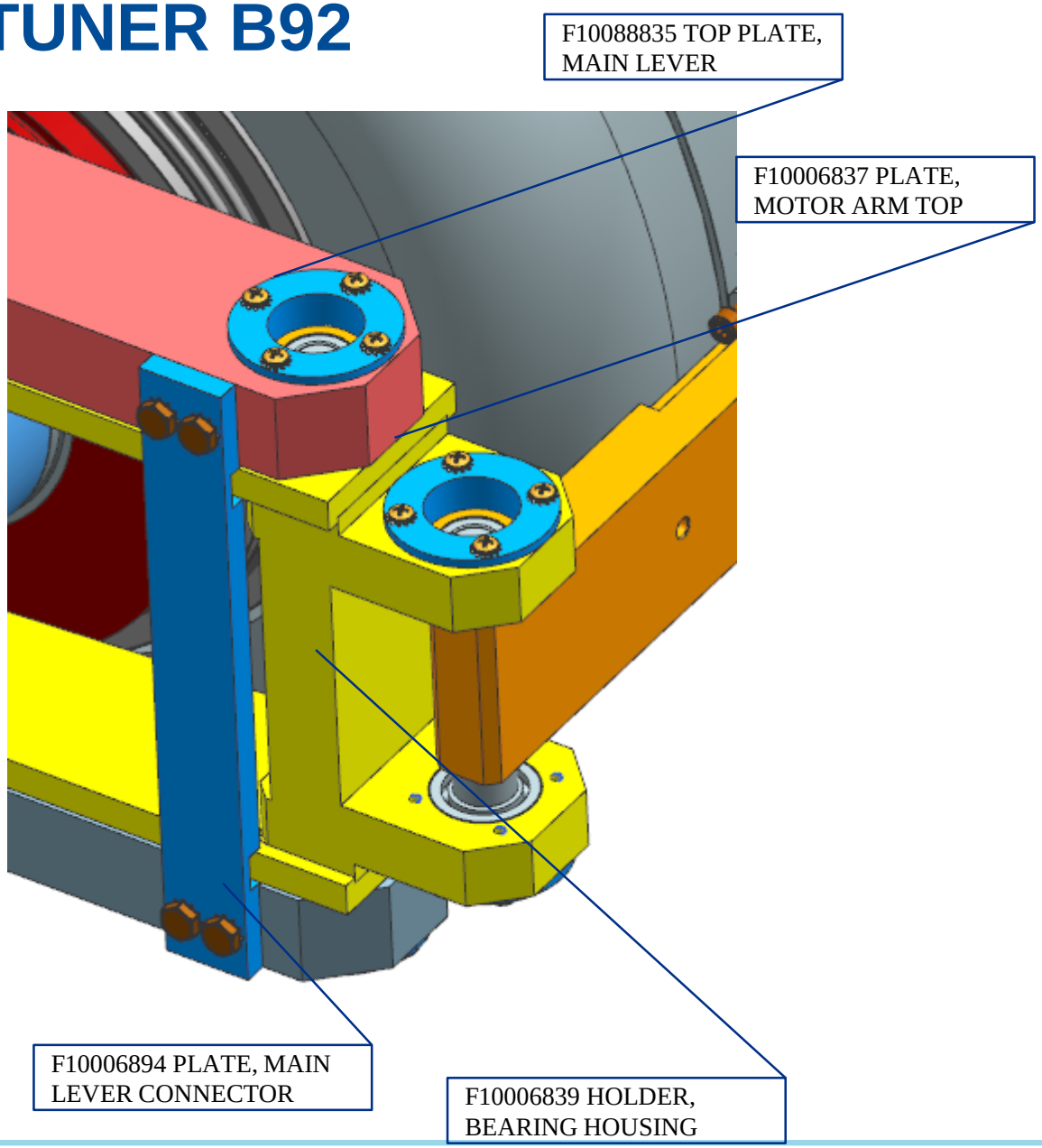
F10088835 TOP PLATE, MAIN LEVER
F10006837 PLATE, MOTOR ARM TOP
F10006894 PLATE, MAIN LEVER CONNECTOR
F10006839 HOLDER, BEARING HOUSING

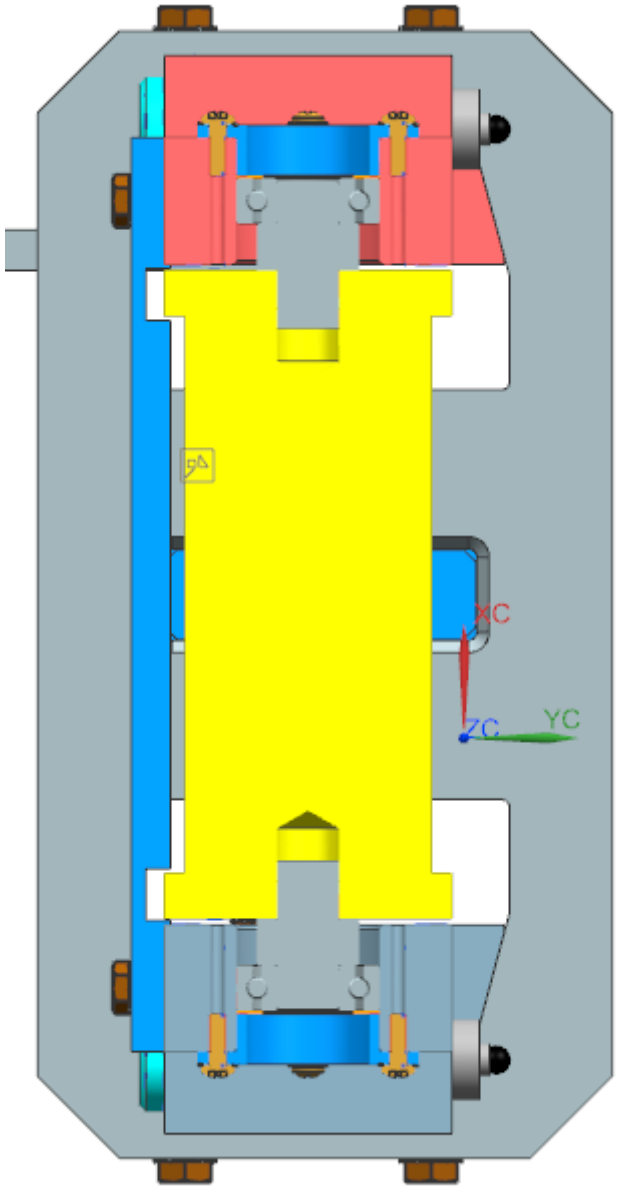
XC
ZC
YC

TUNER B92

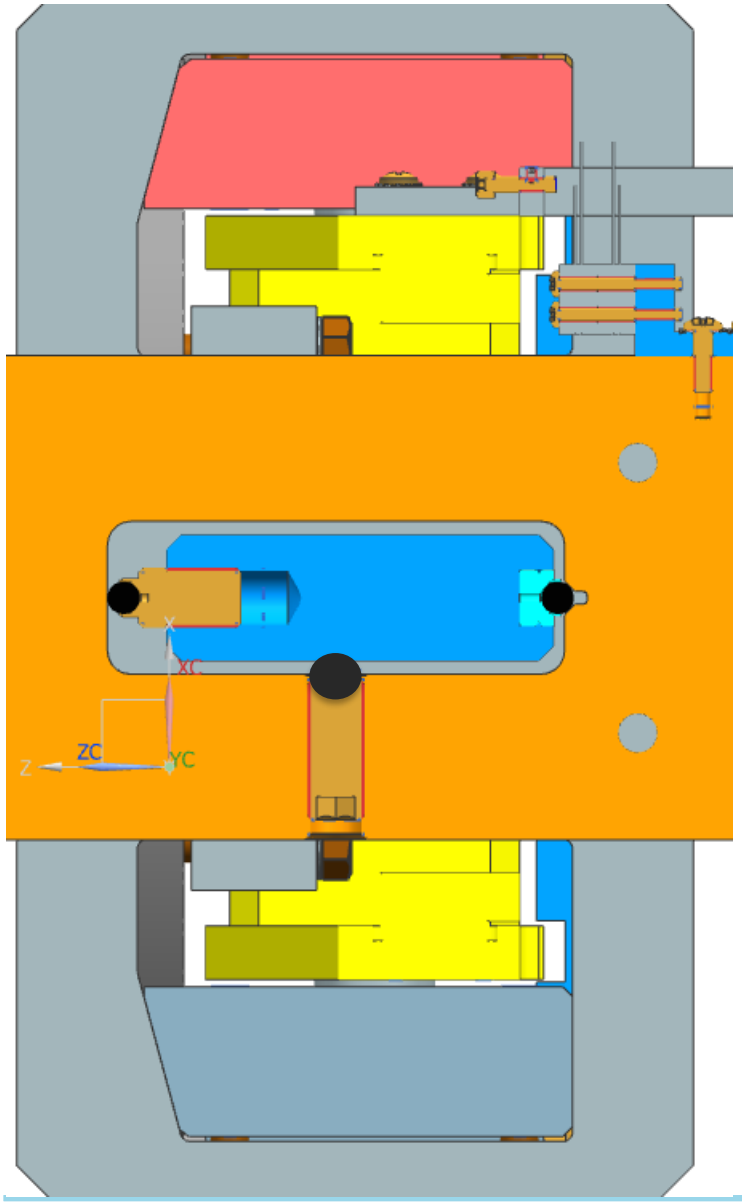

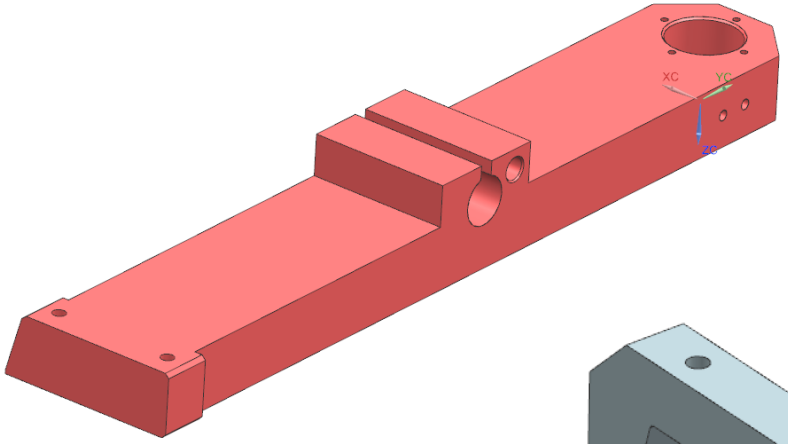

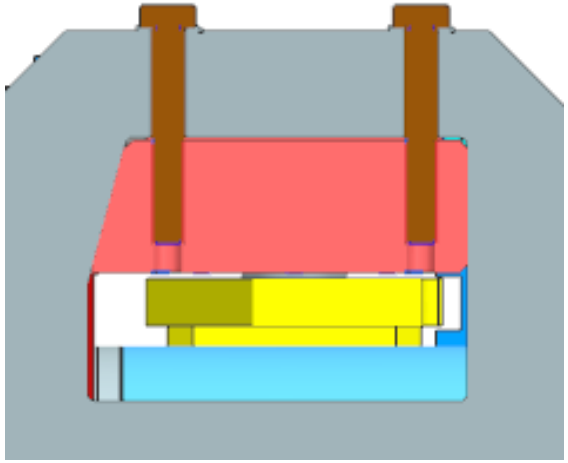

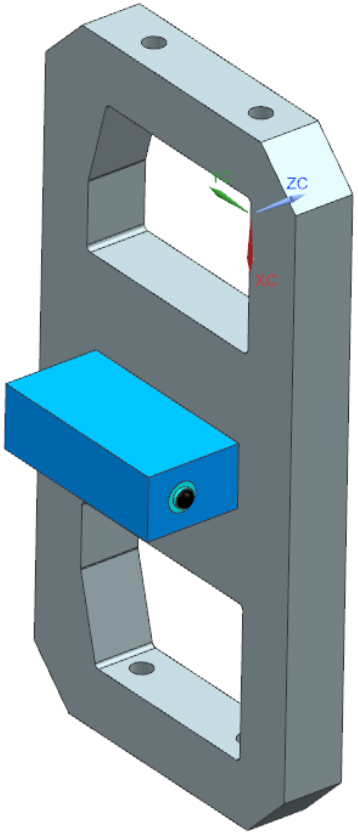

TUNER B92

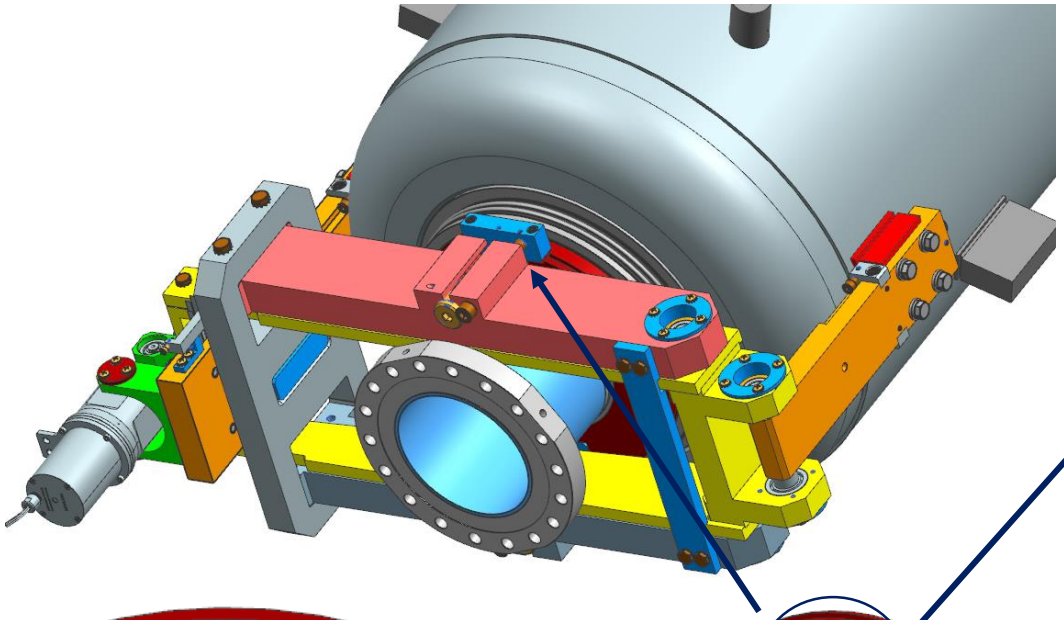

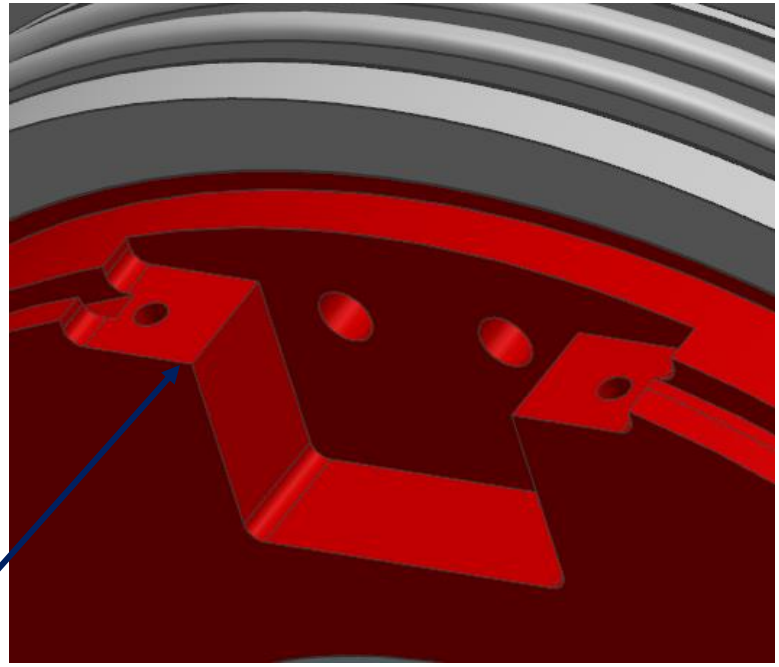

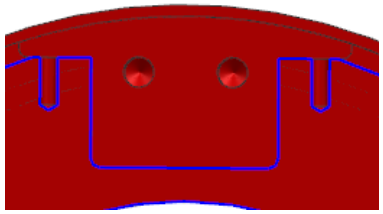

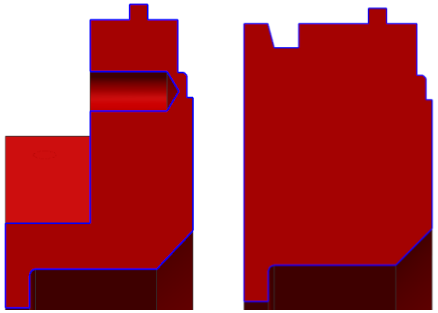

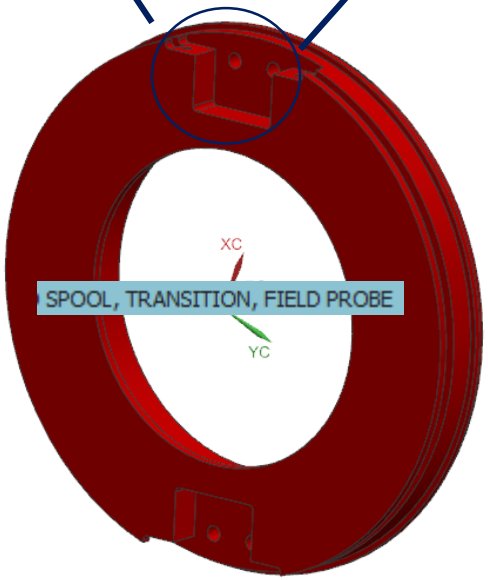

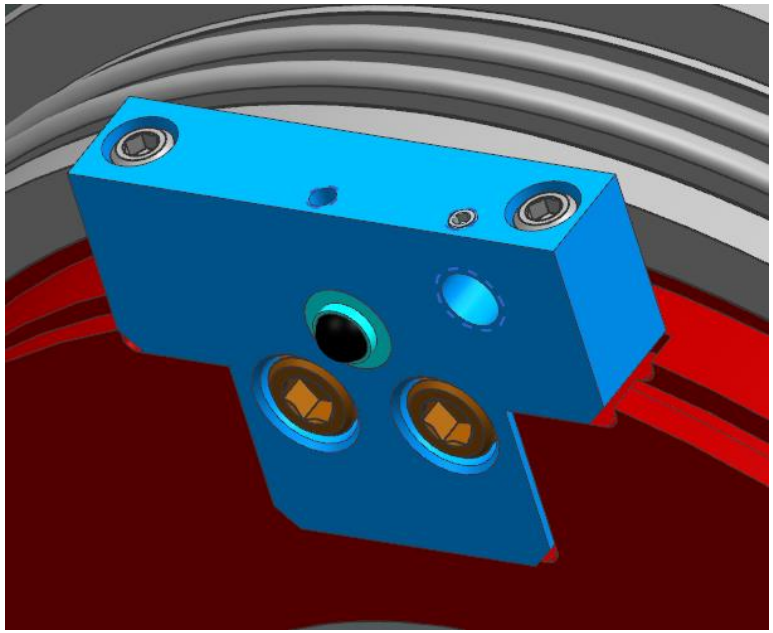

TUNER B92

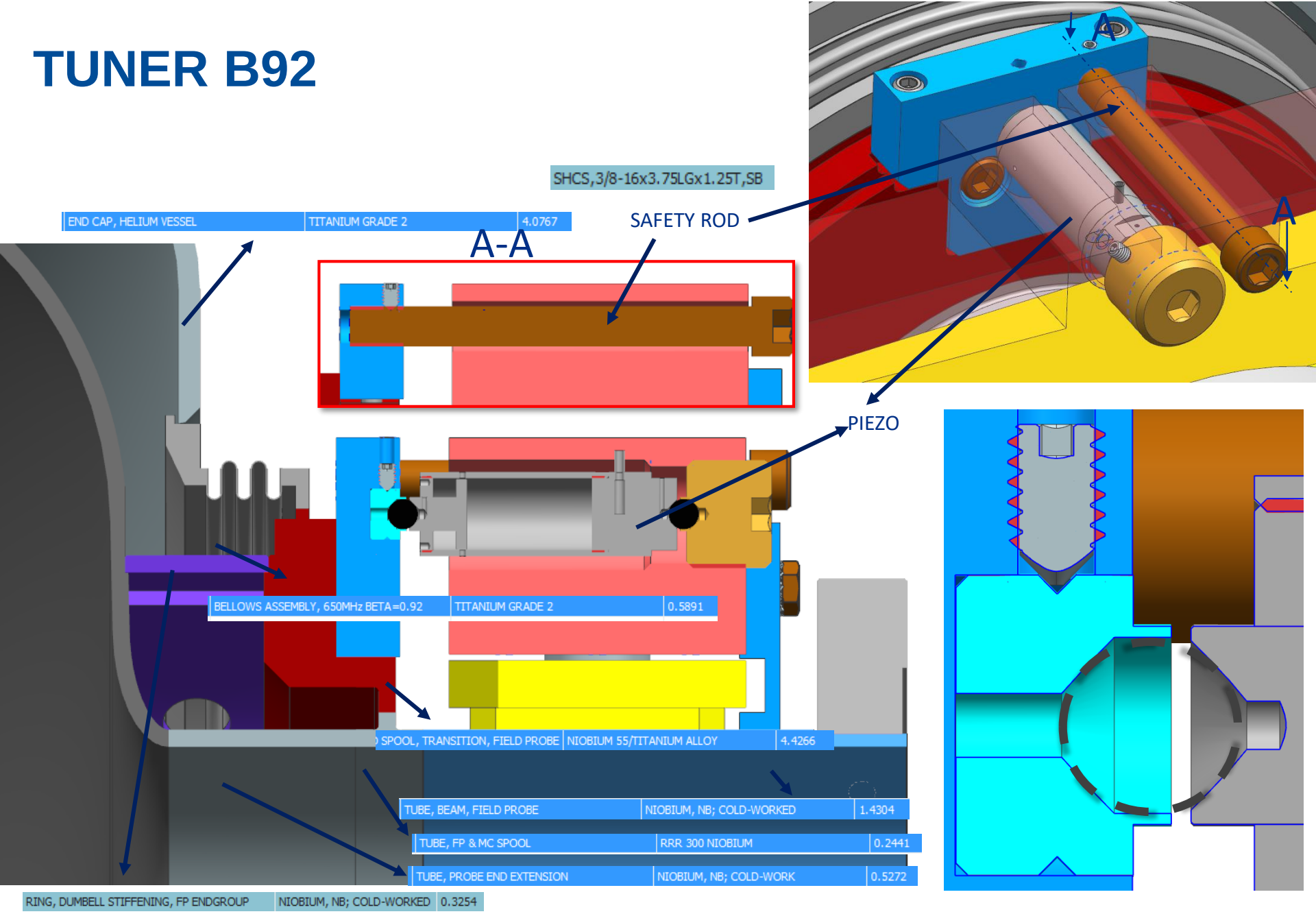
SHCS,3/8-16x3.75LGx1.25T,SB
SAFETY ROD
A
A
END CAP, HELIUM VESSEL | TITANIUM GRADE 2 | 4.0767
A-A
PIEZO
BELLOWS ASSEMBLY, 650MHz BETA=0.92 | TITANIUM GRADE 2 | 0.5891
SPOOL, TRANSITION, FIELD PROBE | NIOBIUM 55/TITANIUM ALLOY | 4.4266
TUBE, BEAM, FIELD PROBE | NIOBIUM, NB; COLD-WORKED | 1.4304
TUBE, FP & MC SPOOL | RRR 300 NIOBIUM | 0.2441
TUBE, PROBE END EXTENSION | NIOBIUM, NB; COLD-WORK | 0.5272
RING, DUMBELL STIFFENING, FP ENDGROUP | NIOBIUM, NB; COLD-WORKED | 0.3254

TUNER B092

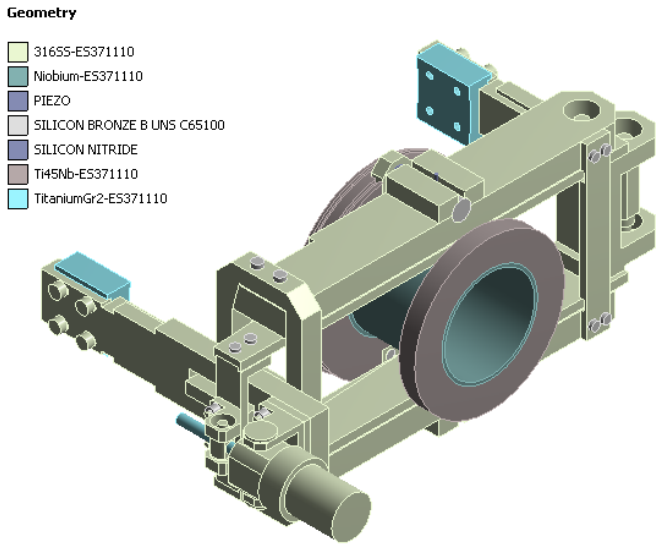
Geometry
316SS-ES371110
Niobium-ES371110
PIEZO
SILICON BRONZE B UNS C65100
SILICON NITRIDE
Ti45Nb-ES371110
TitaniumGr2-ES371110

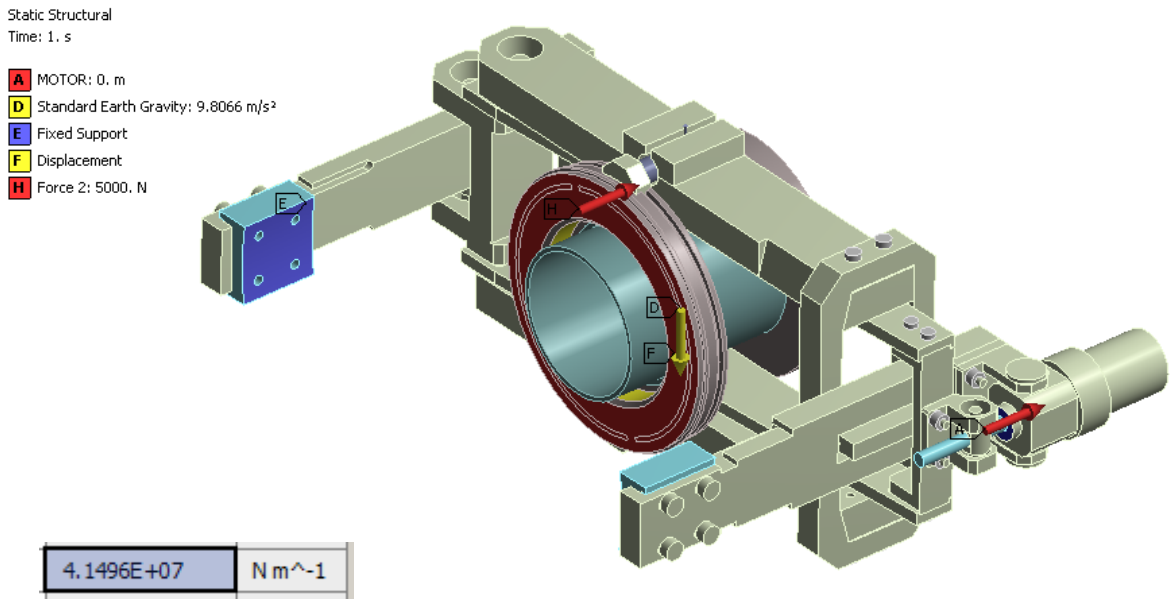
Static Structural
Time: 1. s
A MOTOR: 0. m
D Standard Earth Gravity: 9.8066 m/s²
E Fixed Support
F Displacement
H Force 2: 5000. N
4.1496E+07
N m^-1

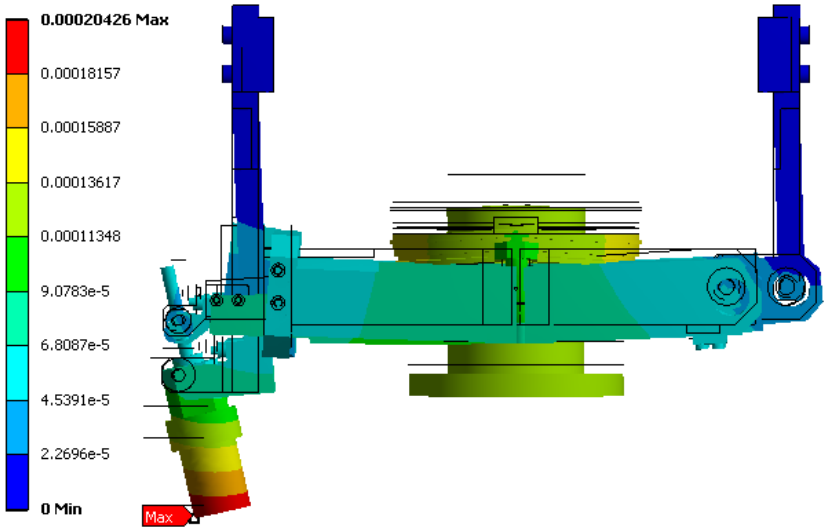
0.00020426 Max
0.00018157
0.00015887
0.00013617
0.00011348
9.0783e-5
6.8087e-5
4.5391e-5
2.2696e-5
0 Min
Max

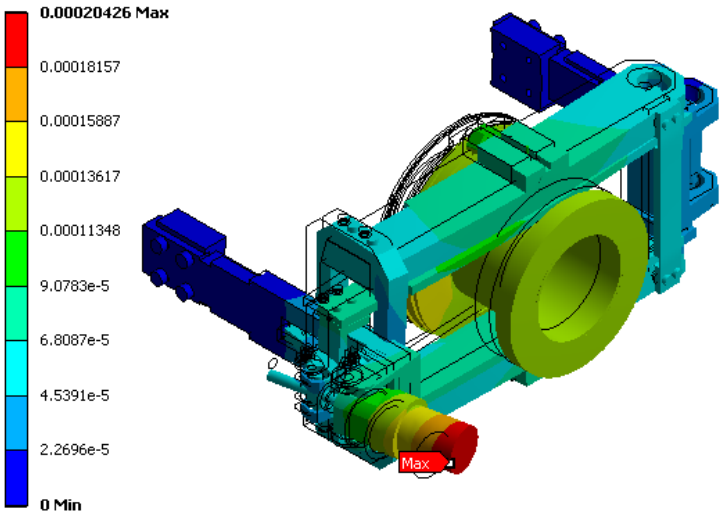
0.00020426 Max
0.00018157
0.00015887
0.00013617
0.00011348
9.0783e-5
6.8087e-5
4.5391e-5
2.2696e-5
0 Min
Max

TUNER B092 TOLERANCES ANALISYS

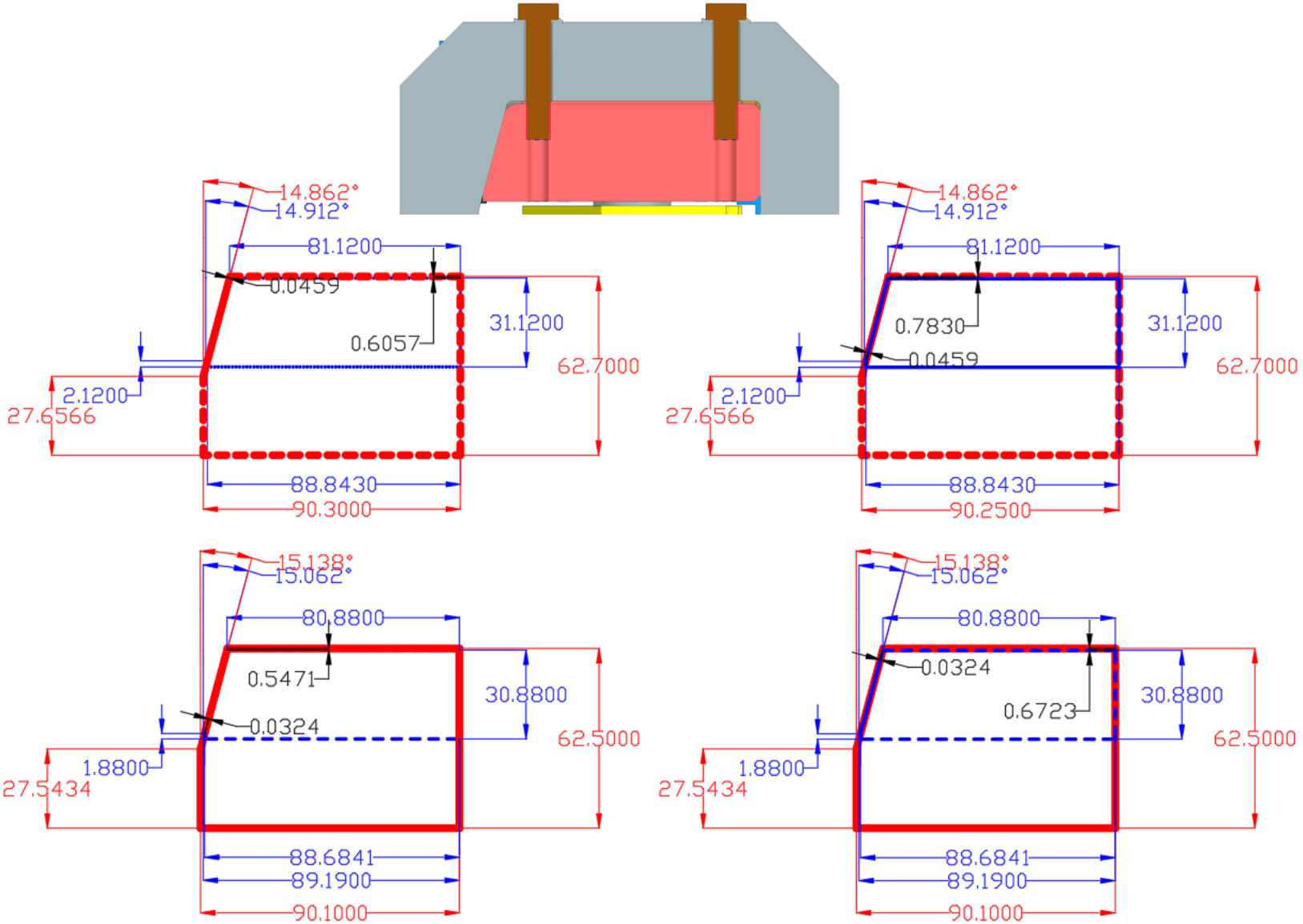

SUMMARY

- 650MHz cavity tuner developed at FNAL based on proven LCLS II tuner design.
- Two modification (B90 and B92)
- Stiffness 40kN/mm