STC status

Alexander Sukhanov

650 MHz High Beta CM Prototype FDR

29 – 31 July 2020

A Partnership of:
- US/DOE
- India/DAE
- Italy/INFN
- UK/UKRI-STFC
- France/CEA, CNRS/IN2P3
- Poland/WUST

Outline

- Installation, B9A-AES-010
- Results of the 1st STC
- Summary

Installation to STC

Installation to STC

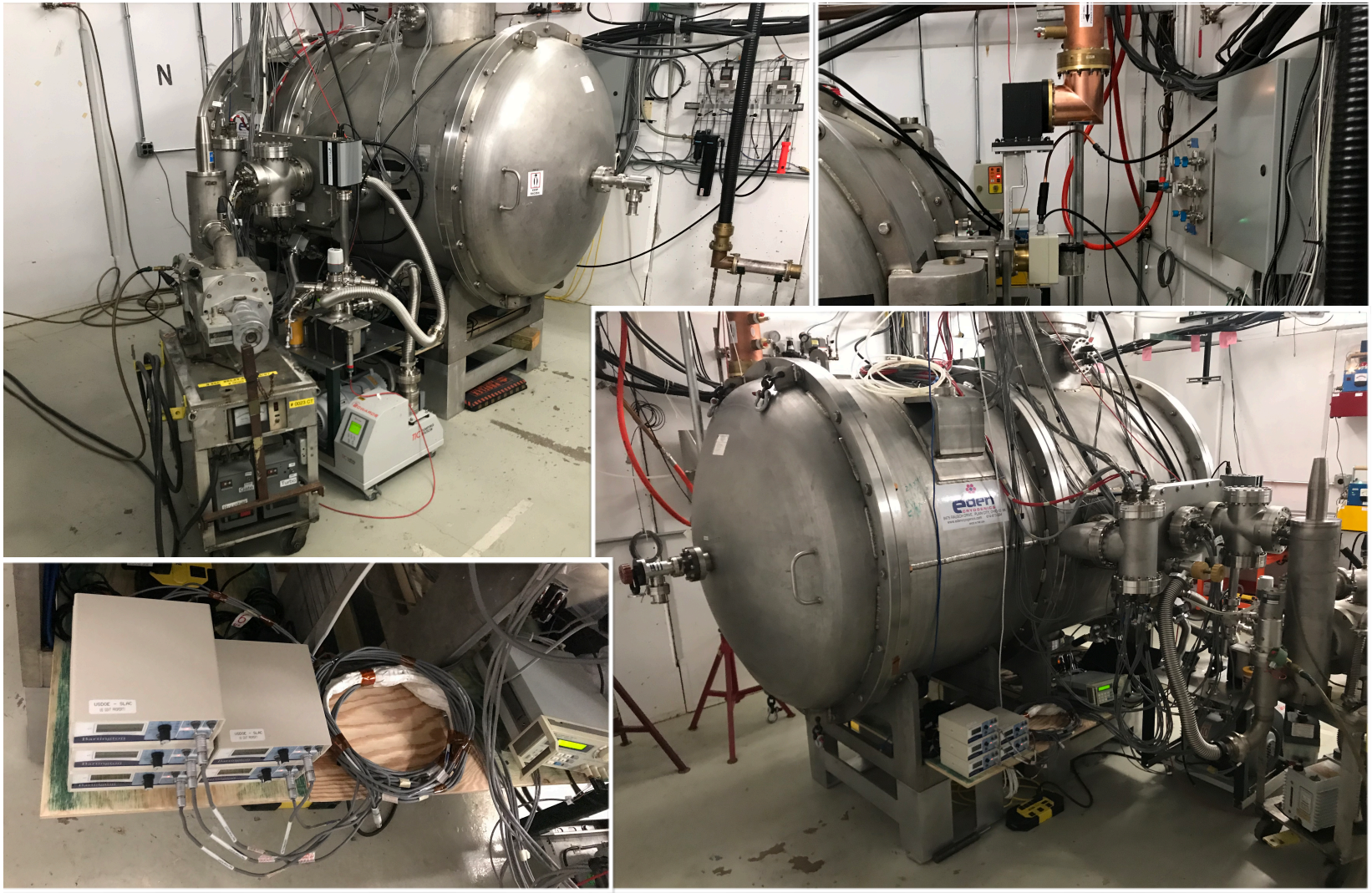

Test Goals and Plan

- STC commissioning for 650 MHz testing: facility (mechanical, instrumentation, vacuum, cryogenic, RF, safety/interlocks), procedures, documentation
- Coupler and tuner tests/validation
- B9A-AES-010 (HB650, 0.9) cavity characterization (max Eacc, Q0, FE, MP)

STC Insulating vacuum and Beam line vacuum

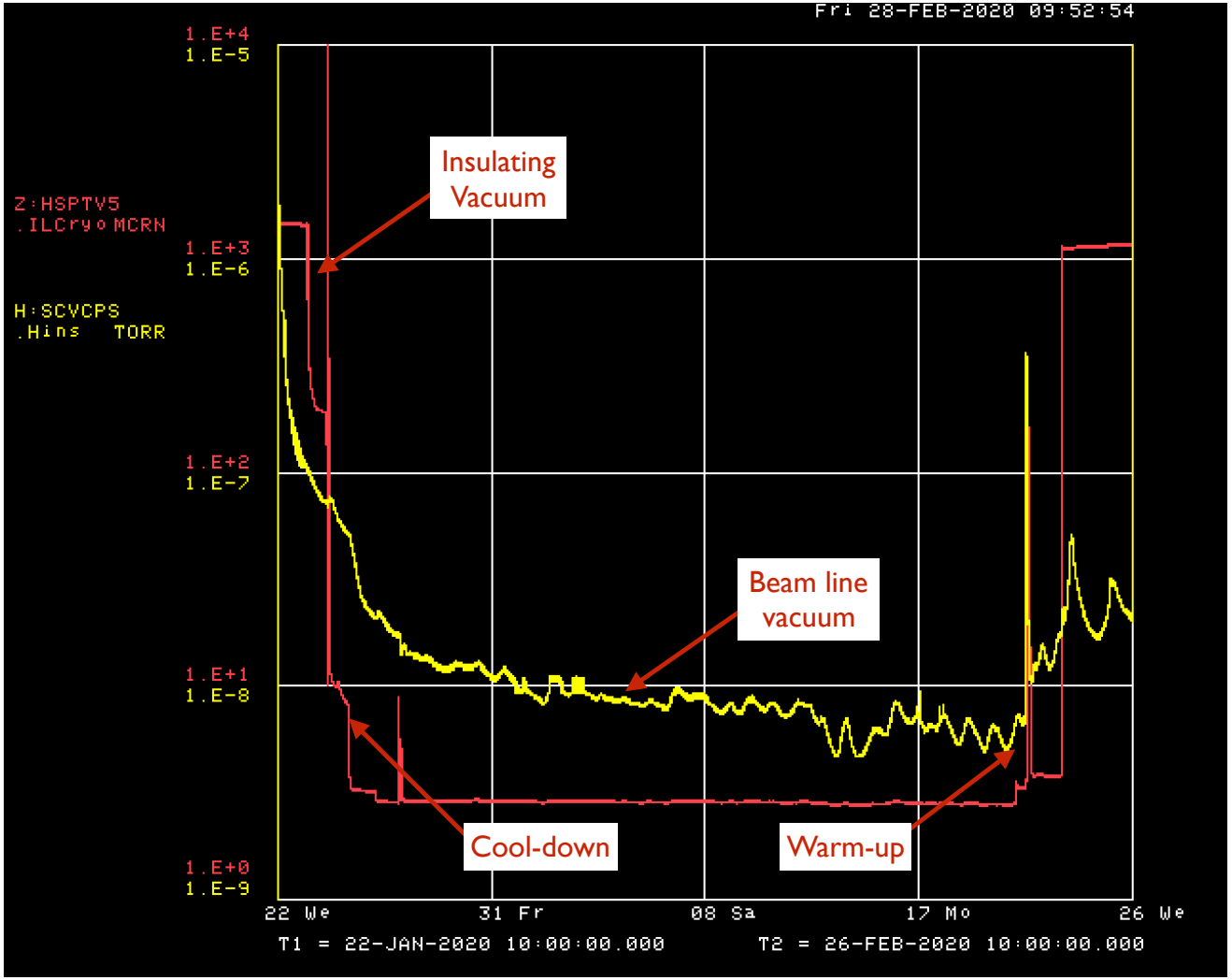

Tuner studies, 4K

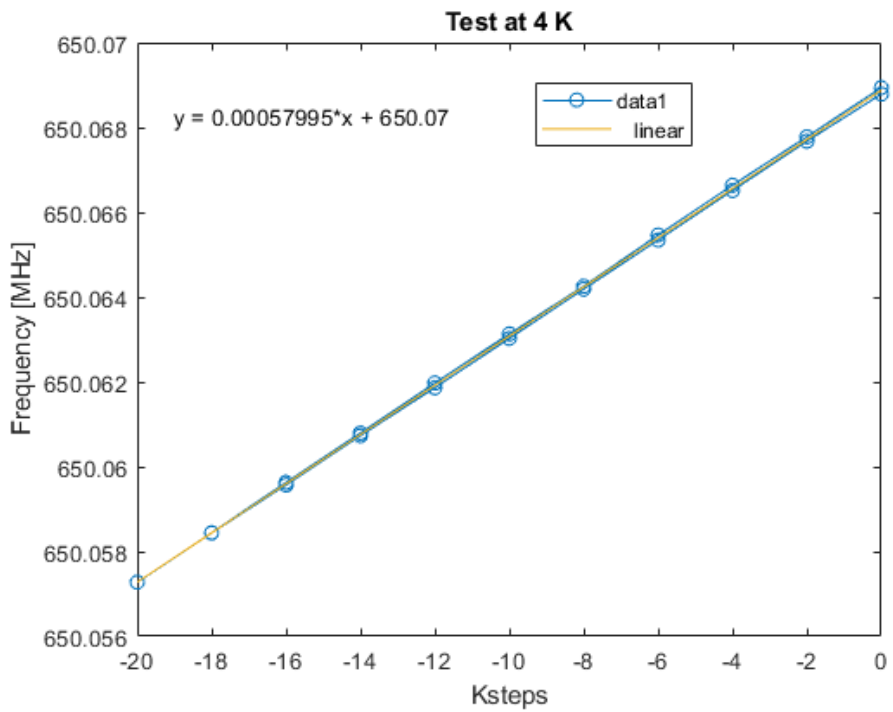

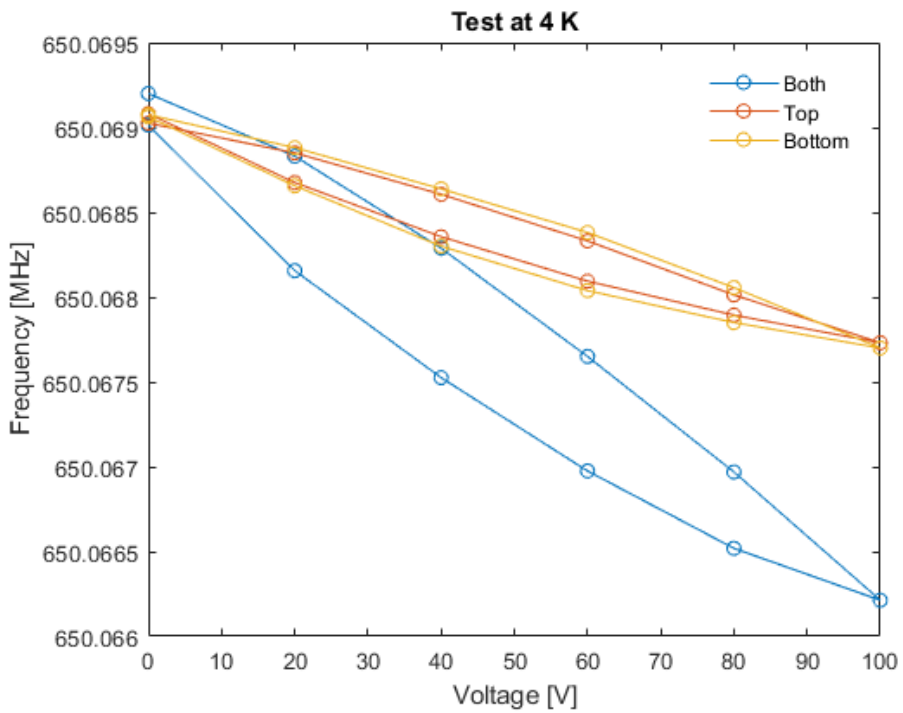

Tuner studies, 2K

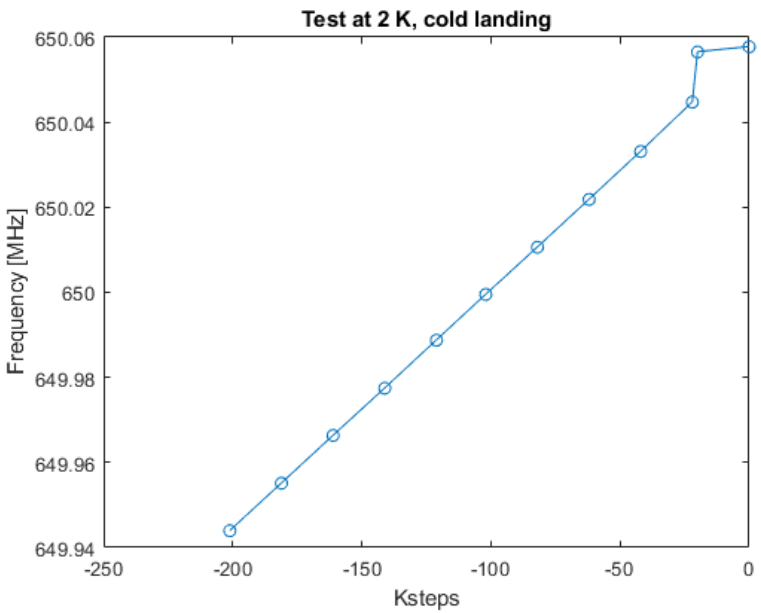

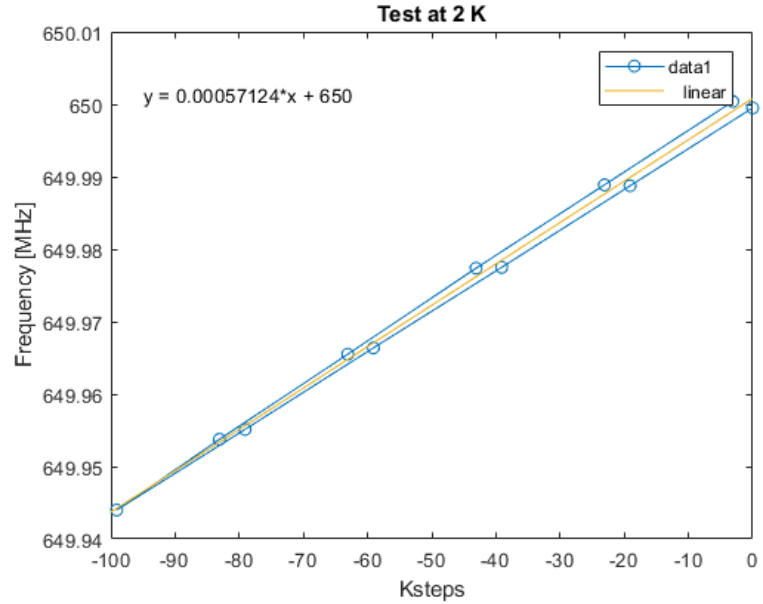

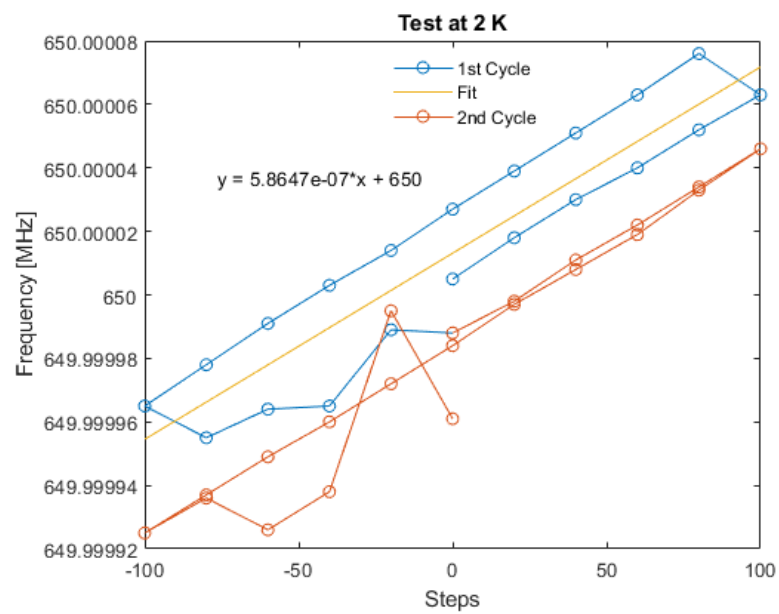

Tuner studies, 2K

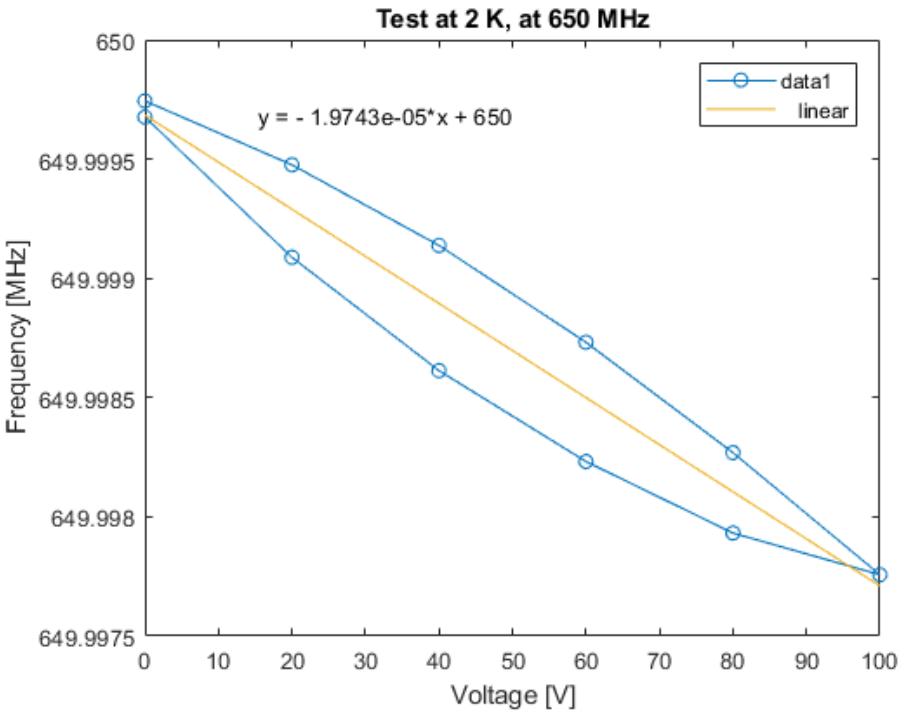

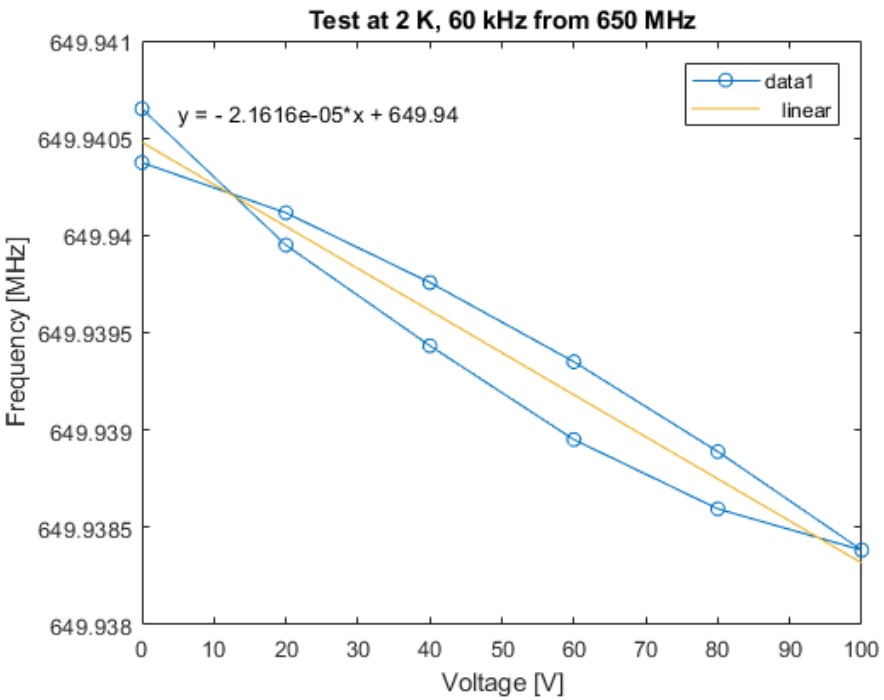

Cavity MP conditioning

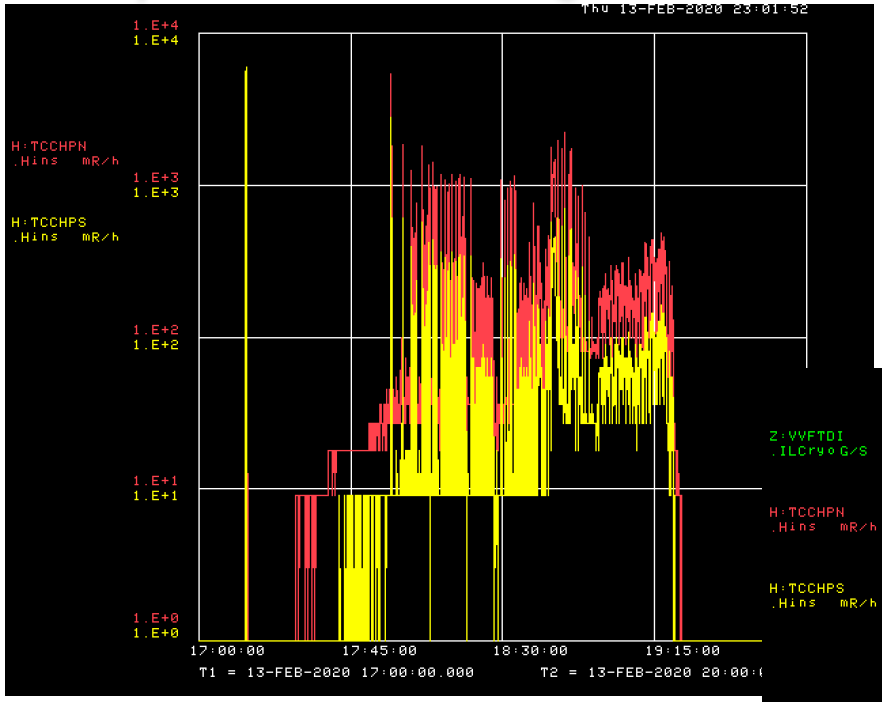

- MP in range 7.5-22 MV/m w/ strong radiation
- Pulsed/CW conditioning, limited at 22 MV/m (pulsed) and 17.6 MV/m (CW) by RF

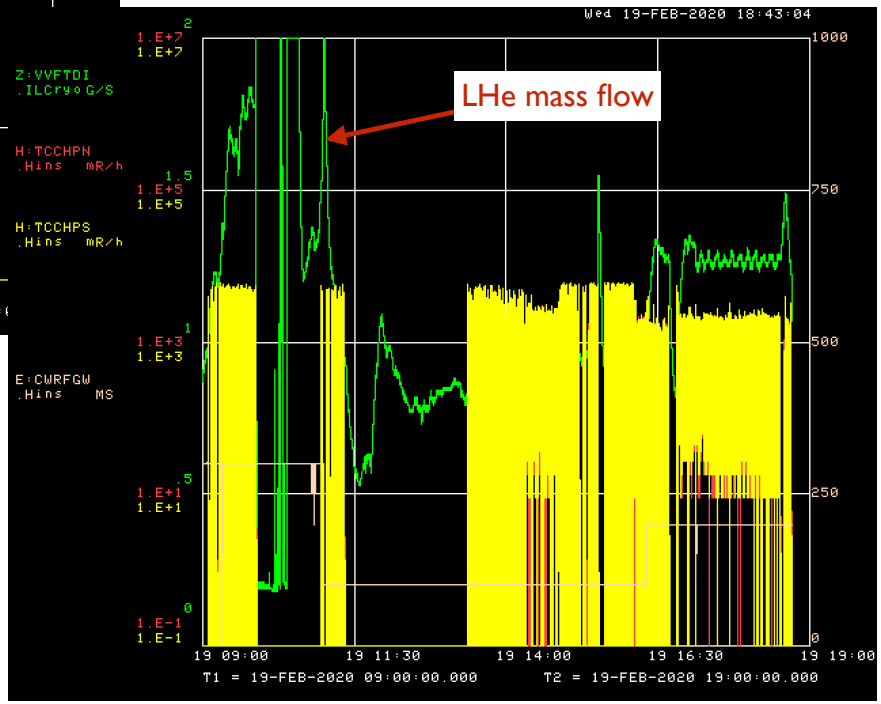

- Cleaned some MP after 20 hours conditioning
- Still persistent MP in 12-16 MV/m and intermittent MP in 7.5-12 MV/m and 16-17.6 MV/m ranges

Quenching cavity at STC

- Quenches at STC may be very violent and upsetting for cryogenic system

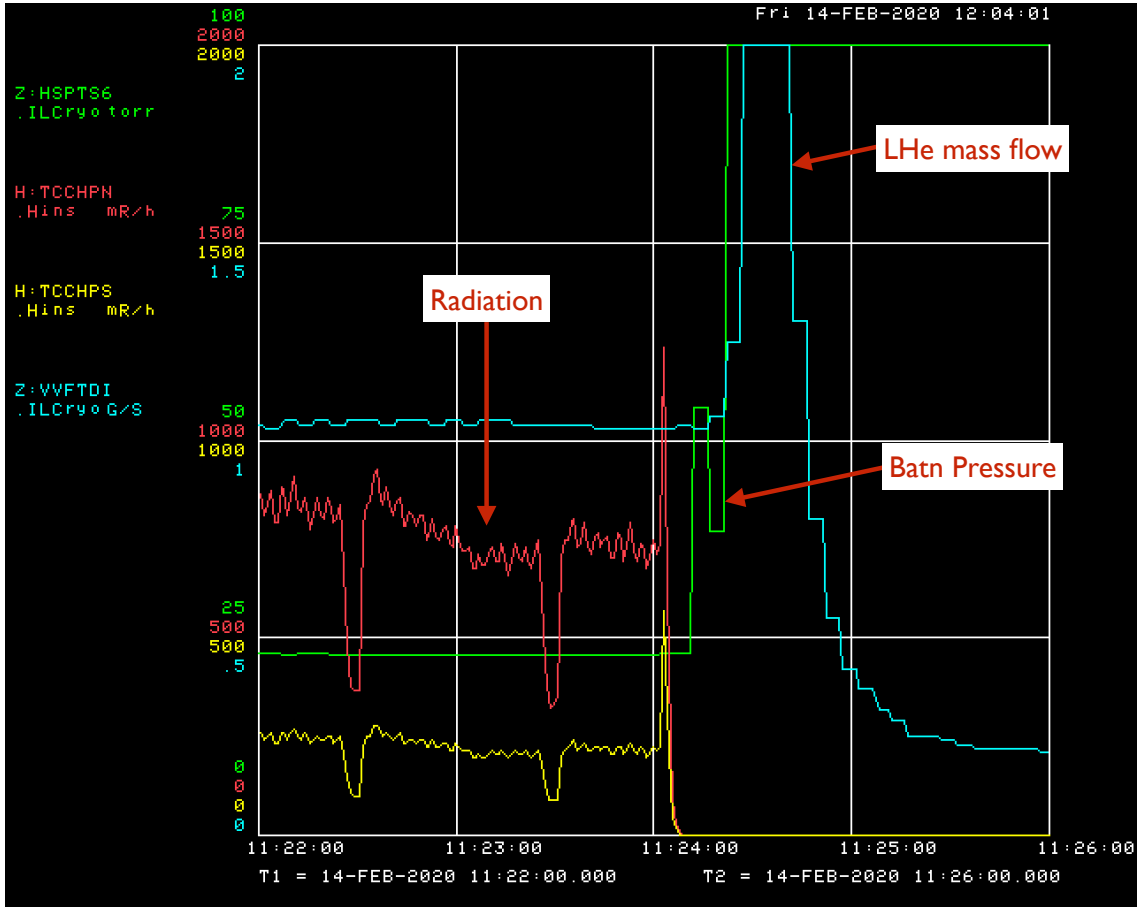

Magnetic field outside cavity

- Magnetic field changed as result of cavity quenching

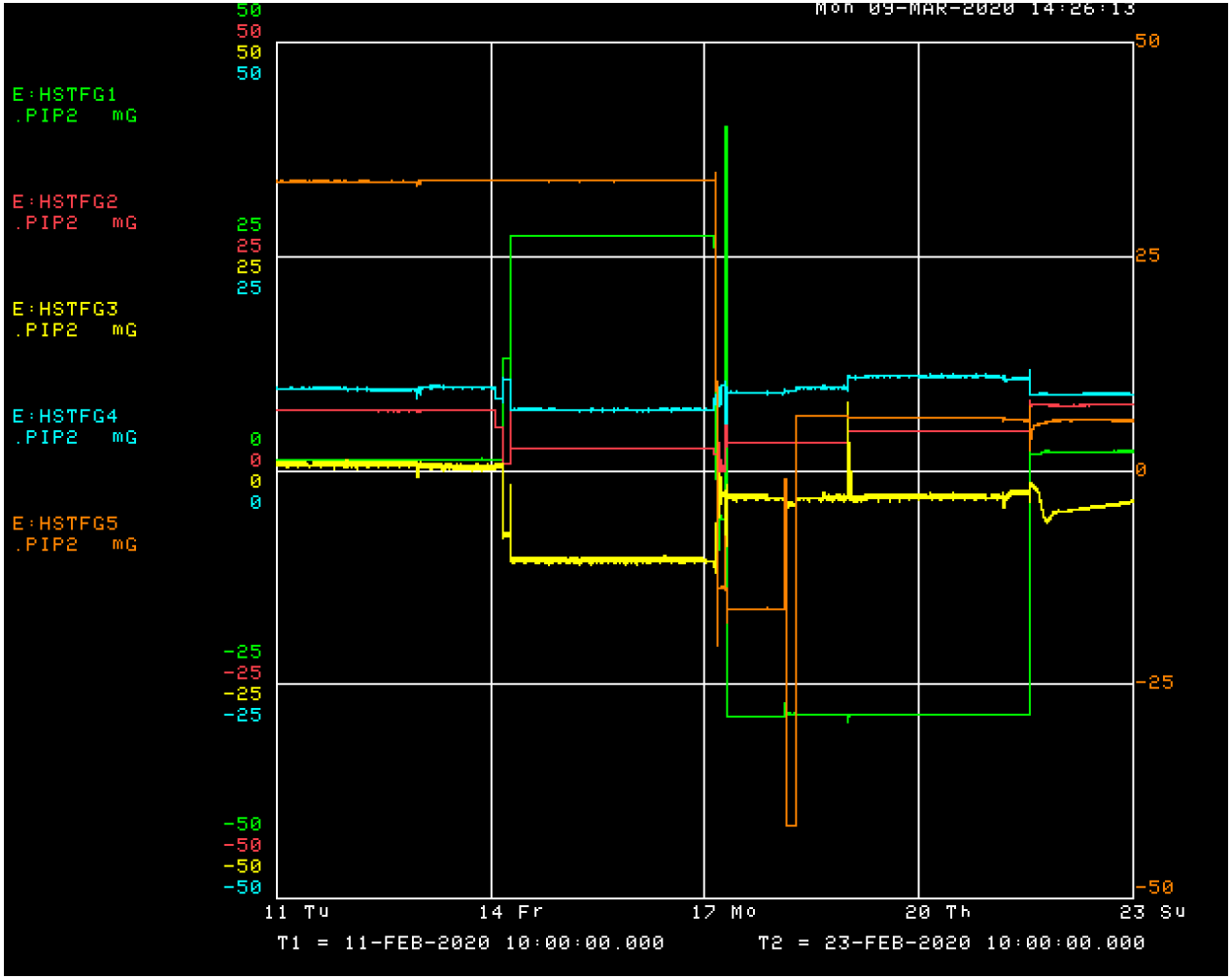

Heater calibration

- Simulate dynamic heat load by heater in LHe instrumentation canister

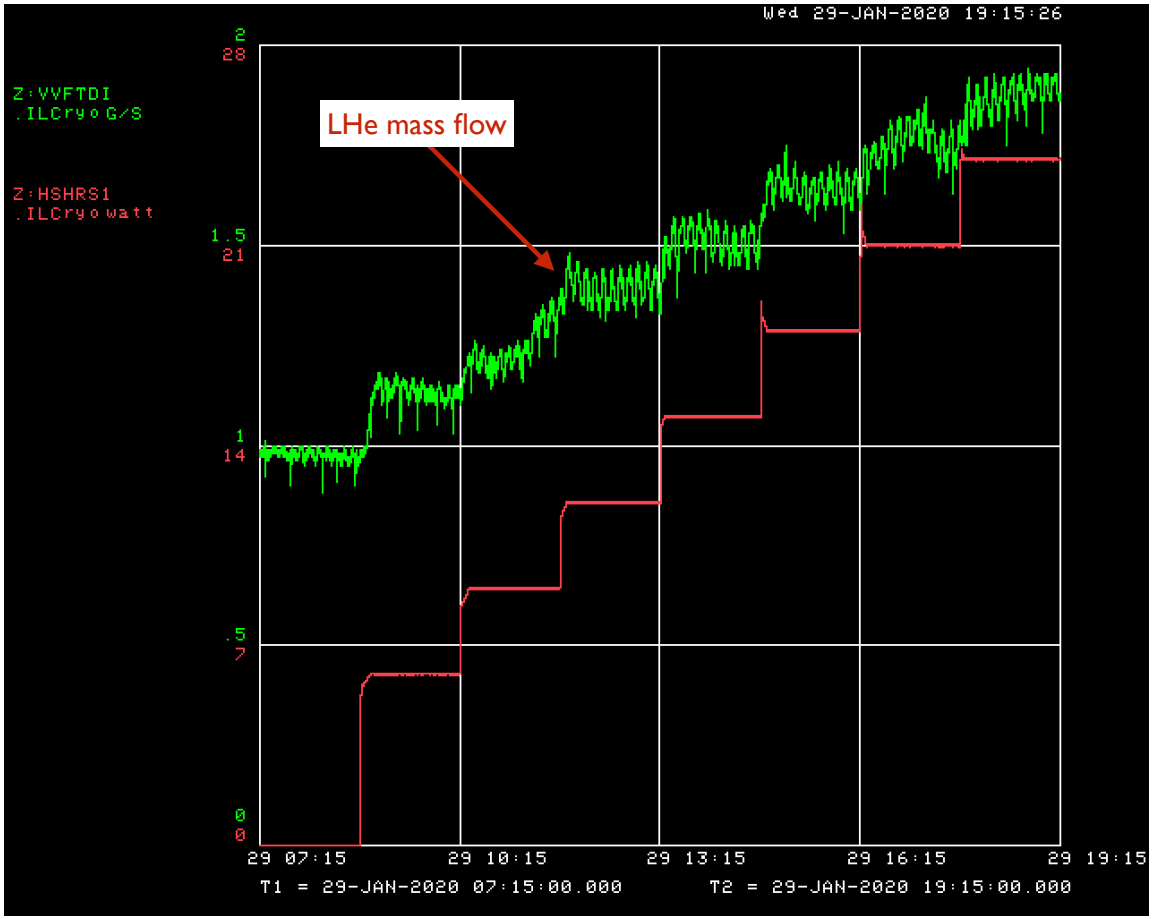

Heater calibration

- Simulate dynamic heat load by heater in LHe instrumentation canister

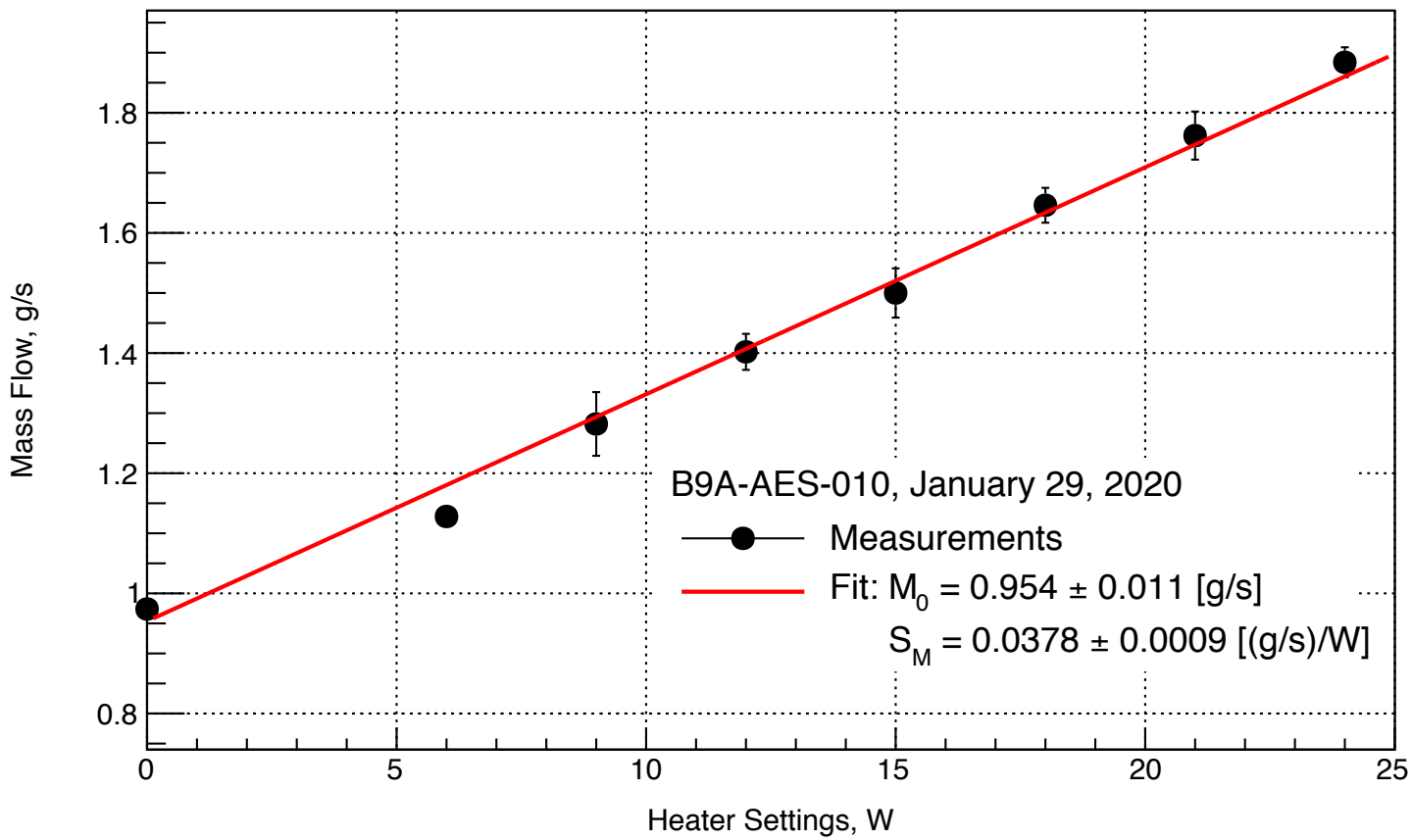

Q0 measurement

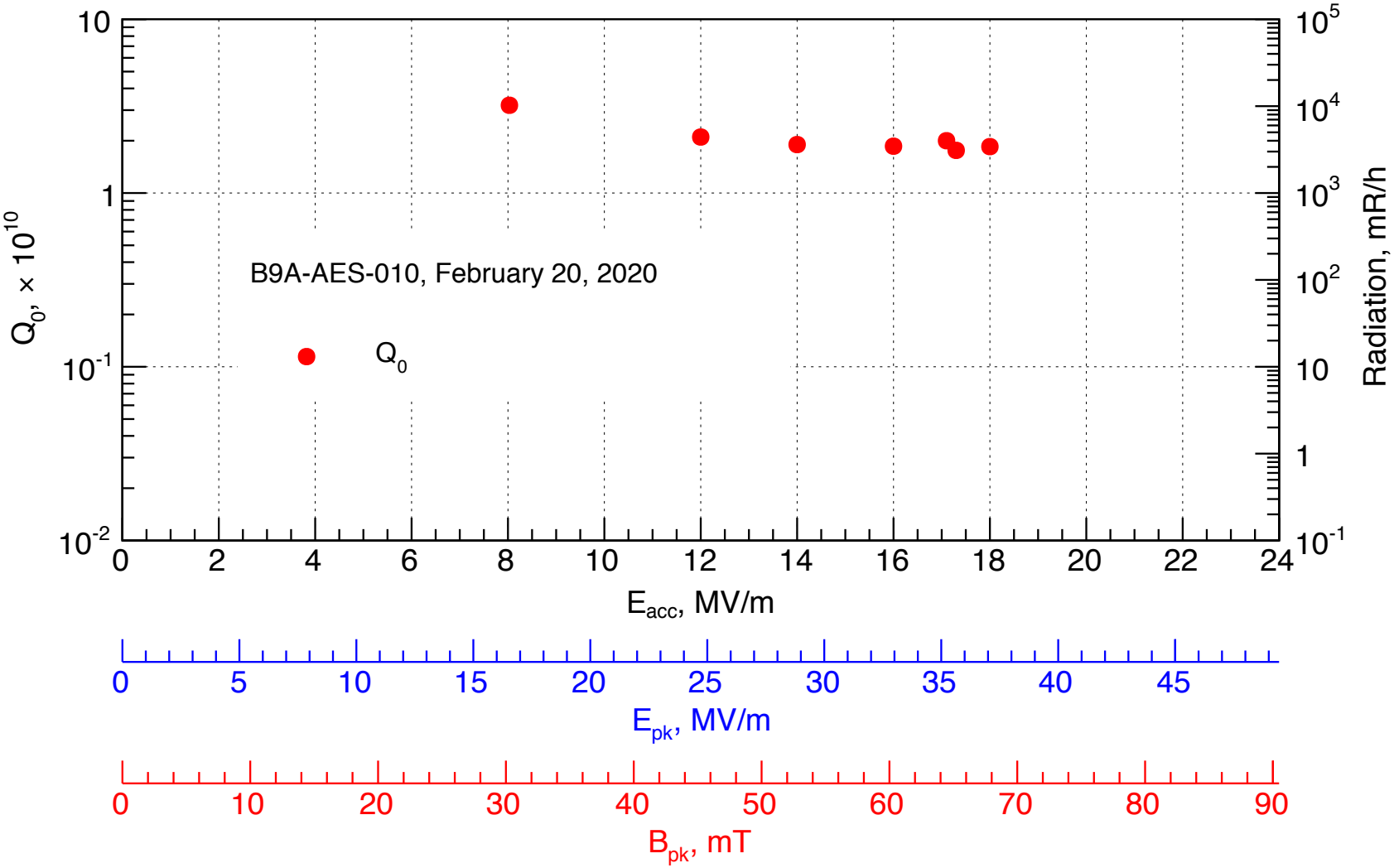

LFD measurement

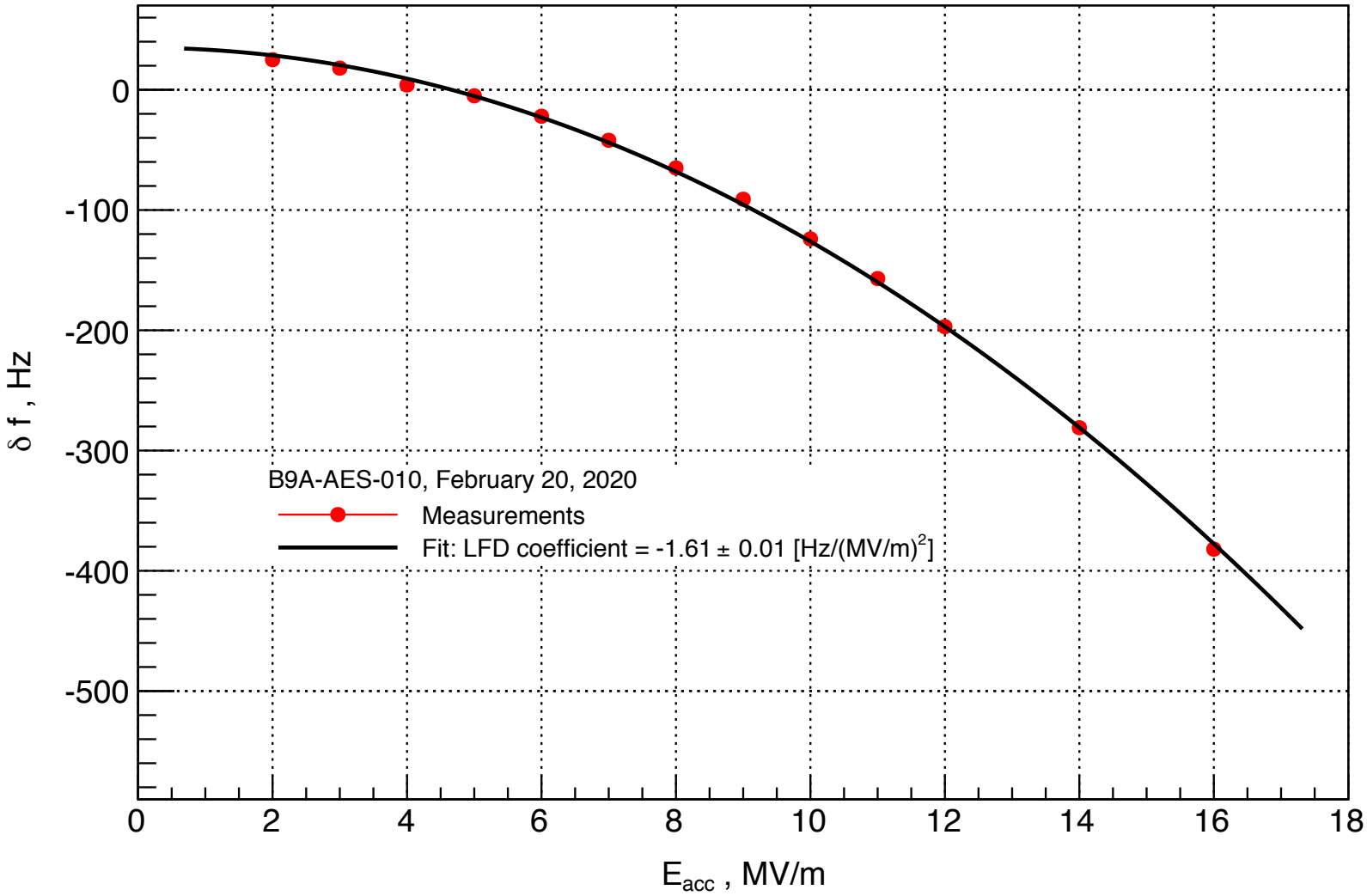

Df/dp measurement

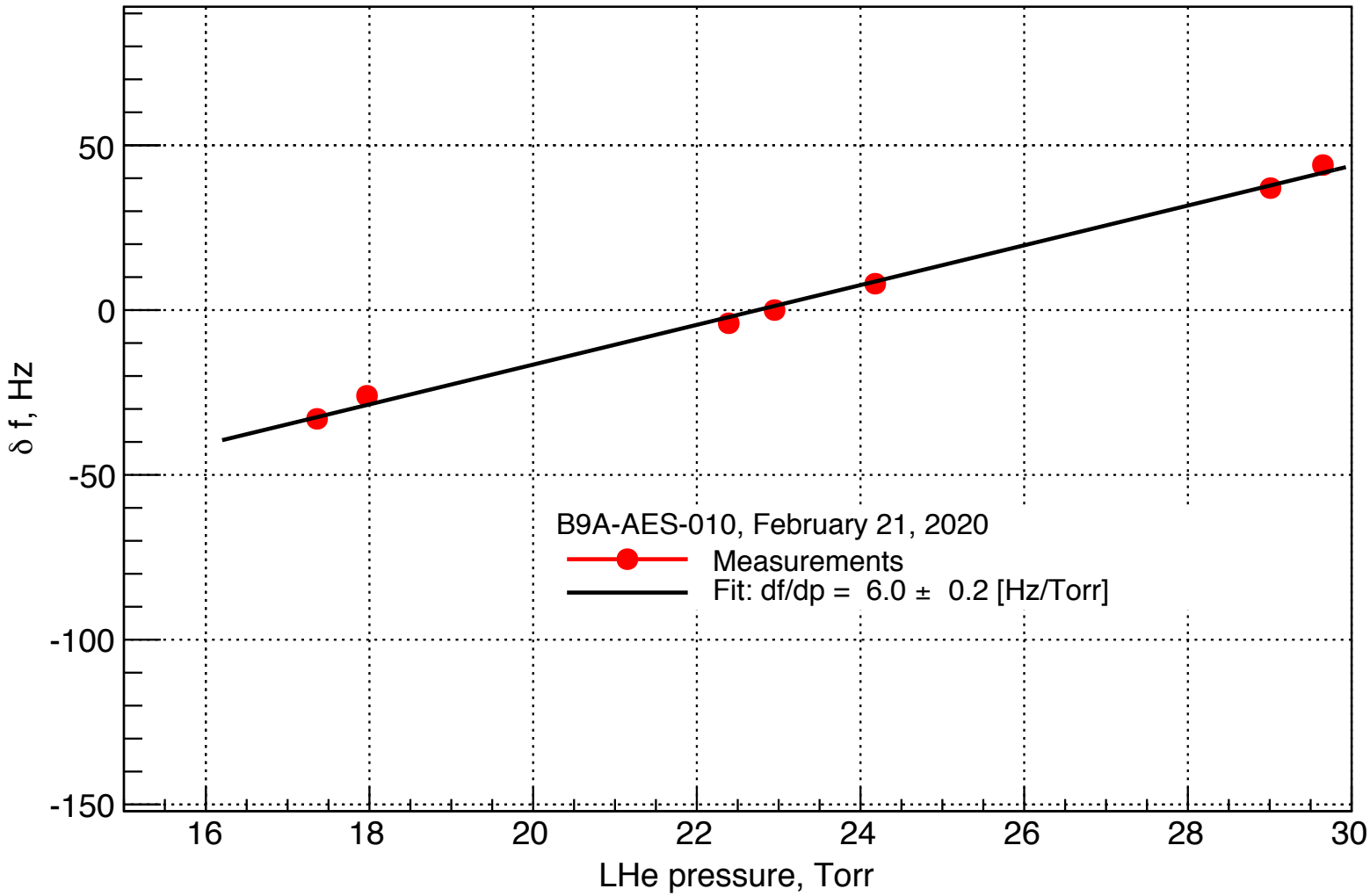

Microphonics

- No data-logging from LLRF system
- “Eye-balled” resonance frequency fluctuations from wave-form display 24 Hz peak-to-peak at 6.6 MV/m

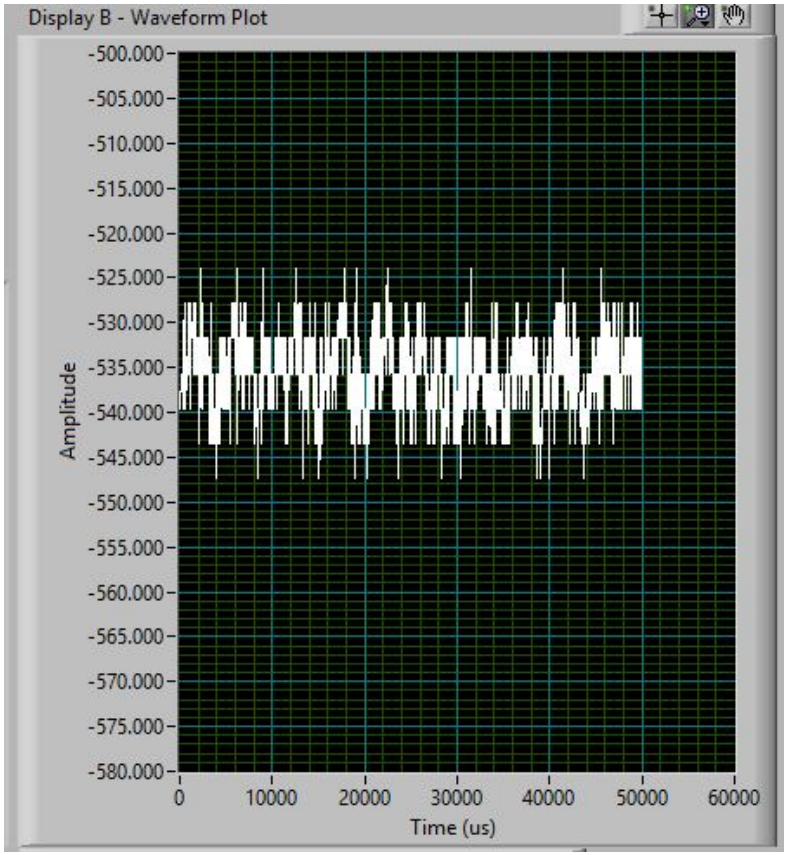

Lessons Learned, STC commisioning

Ex. Temperature management

- High temperature at 5K intercept and 2 K flange

- Need more detailed temperature data from coupler, beam pipe, cart

5K thermal link

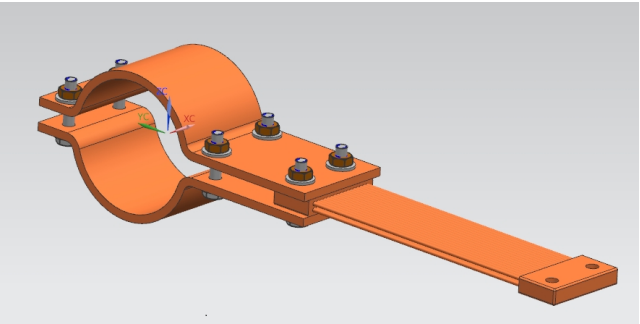

Poor welding and the use of SS material for the plate caused a reason high temperatures at 5K intercept.
It is recommended to use copper clamps to minimize temperature drop for the 5K thermal link.

Clamps for 2-phase pipe line and extension bars

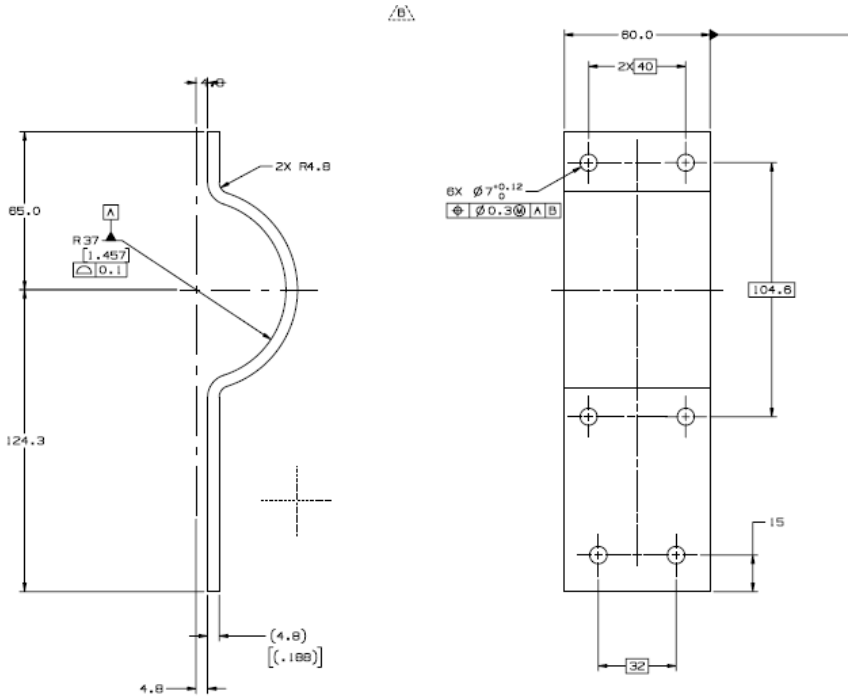

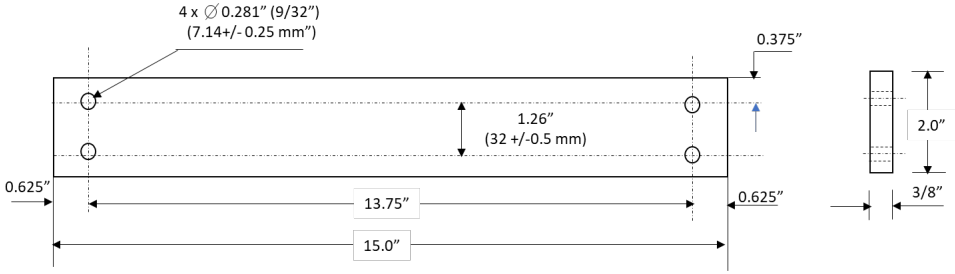

Material:

1. Super-Conductive 101 Copper Sheet, 2" x 24", 3/16" Thick
   McMaster Carr 3350K791, $74.63 ea, q-ty -4, cost: $298.52

2. Super-Conductive 101 Copper Bar, 3/8" Thick, 2" Wide 4 ft long
   McMaster Carr 89675K218, $176.00 ea, q-ty -2, cost: $352.00

Total: $650.52

Labor:

TD tech + Village machine shop for clamp bending

Additional 8 channels, readout, sensors

1. Cryocon 18i module – available → network connection, configuration (AD)
2. Cables from cryostat flange to PD-R8 readout rack , 2 cables, 115 ft long

Fred

3. Cables from cryostat flange to temperature sensors, 2 cable, 10 ft long

-

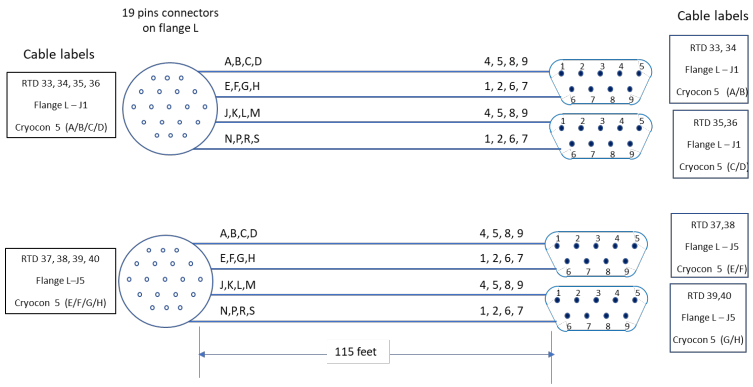

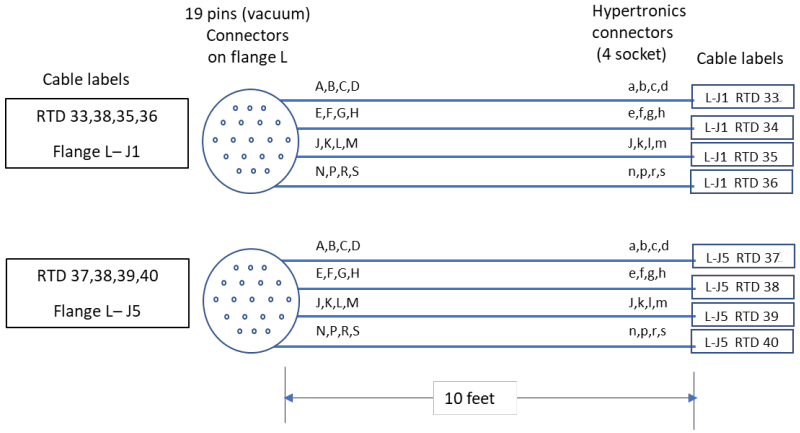

Summary

- Commissioned STC for 650 MHz operation
- The report placed in TC; *ED0011810 1st STC test report*
- Tested/validated tuner/coupler designs
- Characterized performance of HB650 (0.9) PIP-II cavity B9A-AES-010
- The cavity, coupler, and tuner tested in STC will be shipped to RRCAT to commission their horizontal test stand
- Lessons Learned from STC was documented and entered to PIP-II LL database: STC LL summary
- Studies on fast cooldown procedures and cool down rate vs. Q0 in STC will be addressed during next STC.

Back up

Cooldown rate

- Optimal cooldown rate is estimated from LCLS-II data, tentatively

Table: Estimation on 650 cavity and cryomodule cooldown mass flow rate

Cavity Types	Niobium Mass [kg]	Cool down mass flow per cavity [g/s]	Cool down mass flow per cryomodule [g/s]
LCLS-II	21.8	4	32
LB650	58.6	10.7	43
HB650	65.3	12	72

STC Instrumentation

650MHz cavity instrumentation

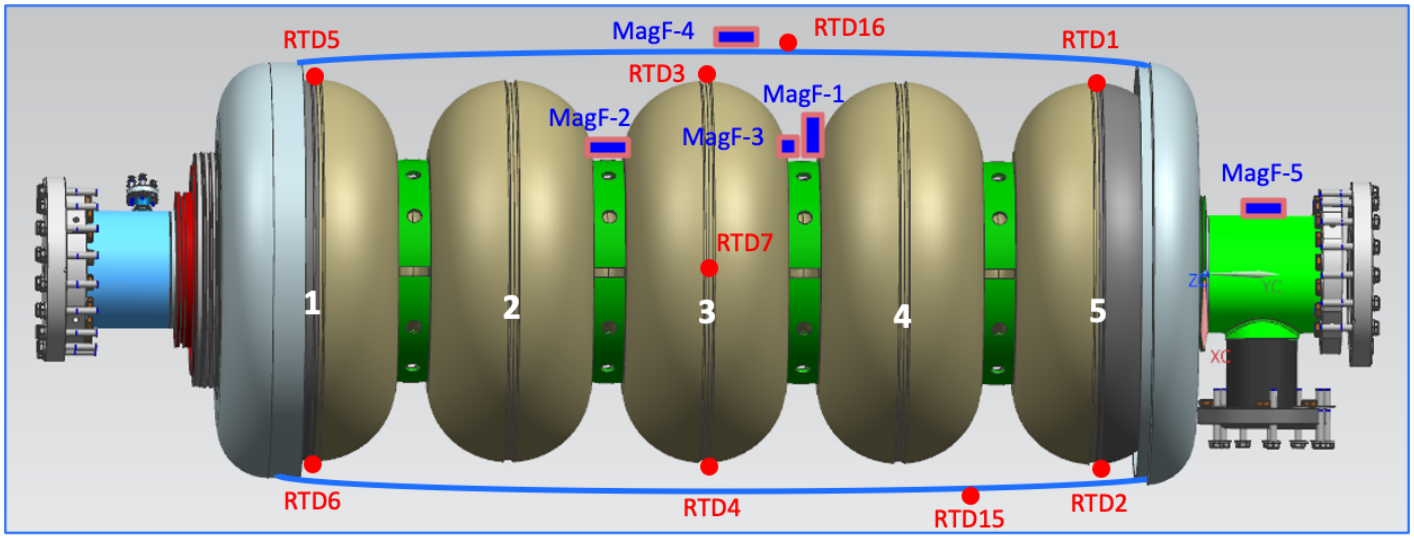

NAME:	S/N	Type	Description	Device	Acnet name
RTD 1	X113277	Cernox	Cavity Cell 5 top	CryoconSTC1	E:HSTX01
RTD 2	X113273	Cernox	Cavity Cell 5 bottom	CryoconSTC1	E:HSTX02
RTD 3	X113279	Cernox	Cavity Cell 3 top	CryoconSTC1	E:HSTX03
RTD 4	X113276	Cernox	Cavity Cell 3 bottom	CryoconSTC1	E:HSTX04
RTD 5	X113280	Cernox	Cavity Cell 1 top	CryoconSTC1	E:HSTX05
RTD 6	X113674	Cernox	Cavity Cell 1 bottom	CryoconSTC1	E:HSTX06
RTD 7	X113675	Cernox	Cavity Cell 3 center	CryoconSTC1	E:HSTX07
RTD 15	X85727	Cernox	He vessel bottom	CryoconSTC2	E:HSTX15
RTD 16	X85640	Cernox	He vessel top	CryoconSTC2	E:HSTX16
MagF-1	1812	F	Cavity Y	Mag-01H-01	E:HSTFG1
MagF-2	1813	F	Cavity Z	Mag-01H-02	E:HSTFG2
MagF-3	1814	F	Cavity X	Mag-01H-03	E:HSTFG3
MagF-4	1413	F	He vessel top Z	Mag-01H-04	E:HSTFG4
MagF-5	1414	F	Beam pipe top Z	Mag-01H-05	E:HSTFG5

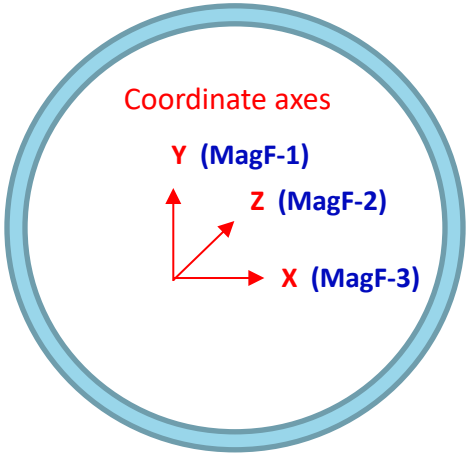

Coupler temperature sensors

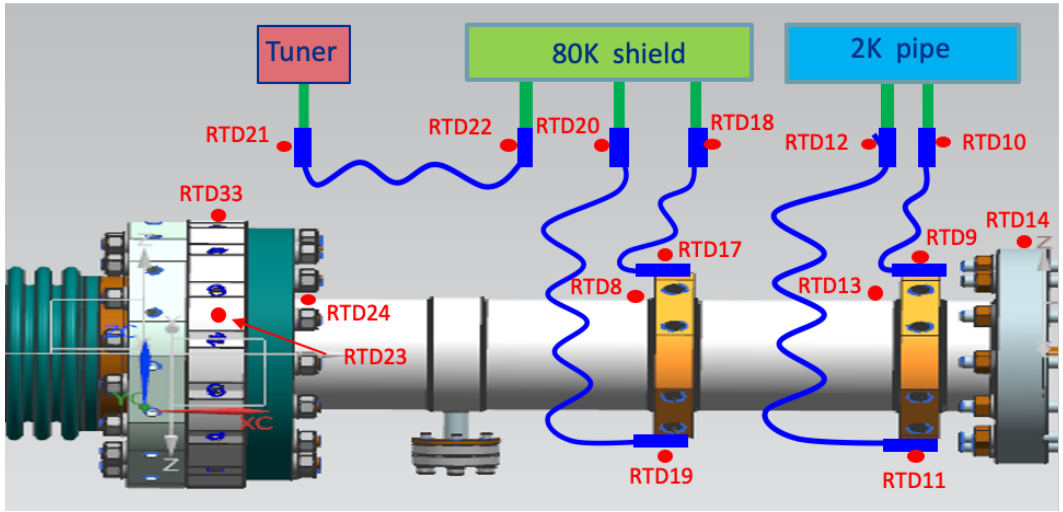

NAME:	S/N	Type	Description	Device	Acnet name
RTD 8	X59930	Cernox	80K intercept SS tube	CryoconSTC1	E:HSTX08
RTD 9	X53809	Cernox	5K thermal strap 1 in	CryoconSTC2	E:HSTX09
RTD 10	X53810	Cernox	5K thermal strap 1 out	CryoconSTC2	E:HSTX10
RTD 11	X85635	Cernox	5K thermal strap 2 in	CryoconSTC2	E:HSTX11
RTD 12	X92182	Cernox	5K thermal strap 2 out	CryoconSTC2	E:HSTX12
RTD 13	X85641	Cernox	5K intercept (SS tube)	CryoconSTC2	E:HSTX13
RTD 14	X50631	Cernox	2K coupler flange	CryoconSTC2	E:HSTX14
RTD 17	P30781	PT102	80K thermal strap 1 in	CryoconSTC3	E:HSTX17
RTD 18	P31735	PT102	80K thermal strap 1 out	CryoconSTC3	E:HSTX18
RTD 19	P21060	PT102	80K thermal strap 2 in	CryoconSTC3	E:HSTX19
RTD 20	P15112	PT102	80K thermal strap 2 out	CryoconSTC3	E:HSTX20
RTD 21	P15107	PT102	Tuner thermal strap in	CryoconSTC3	E:HSTX21
RTD 22	P15113	PT102	Tuner thermal strap out	CryoconSTC3	E:HSTX22
RTD 23	P43588	PT102	Warm flange	CryoconSTC3	E:HSTX23
RTD 24	P43589	PT102	290 K intercept (SS tube)	CryoconSTC3	E:HSTX24
RTD 33	21051	PT100	Interlock		H:SCRTD7

5K thermal straps

80K thermal straps

Thermal shield

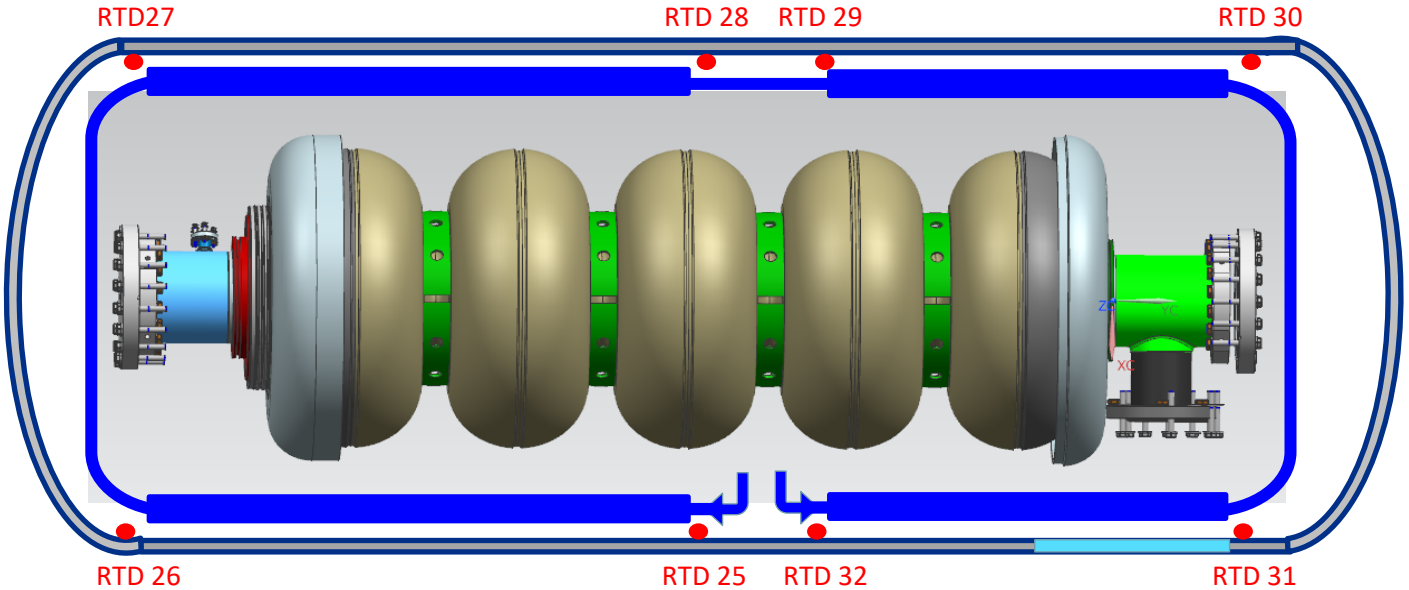

NAME:	S/N	Type	Description	Device	Acnet name
RTD 25	P23634	PT102	Thermal shield	CryoconSTC4	Z:HSTPS3
RTD 26	P22599	PT102	Thermal shield	CryoconSTC4	Z:HSTPS4
RTD 27	P27423	PT102	Thermal shield	CryoconSTC4	Z:HSTPS5
RTD 28	P23633	PT102	Thermal shield	CryoconSTC4	Z:HSTPS6
RTD 29	P22211	PT102	Thermal shield	CryoconSTC4	Z:HSTPS7
RTD 30	P22212	PT102	Thermal shield	CryoconSTC4	Z:HSTPS8
RTD 31	P23626	PT102	Thermal shield	CryoconSTC4	Z:HSTPS9
RTD 32	P27355	PT102	Thermal shield	CryoconSTC4	Z:HSTP10

instrumentation

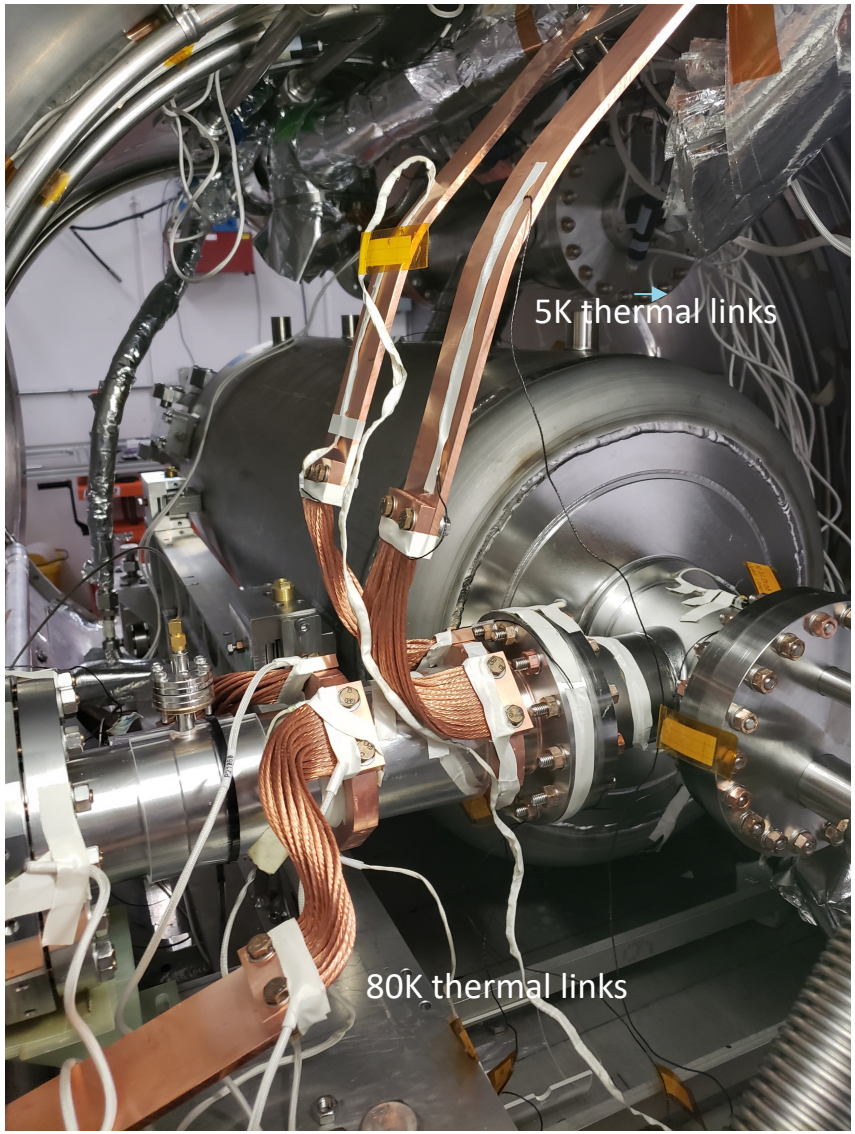

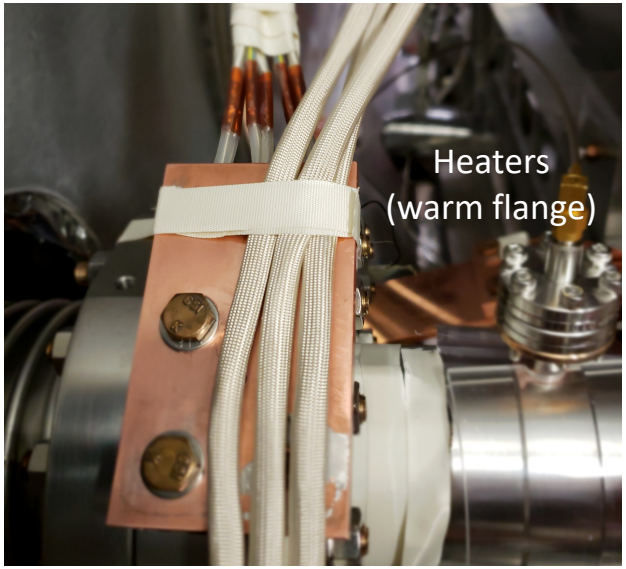

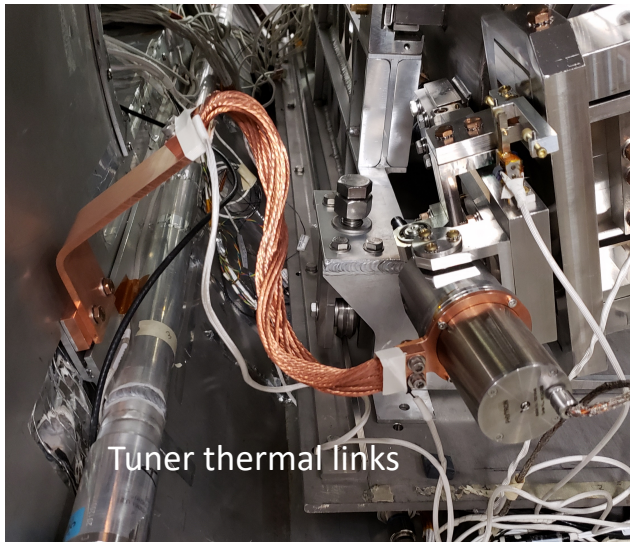

Acnet readout

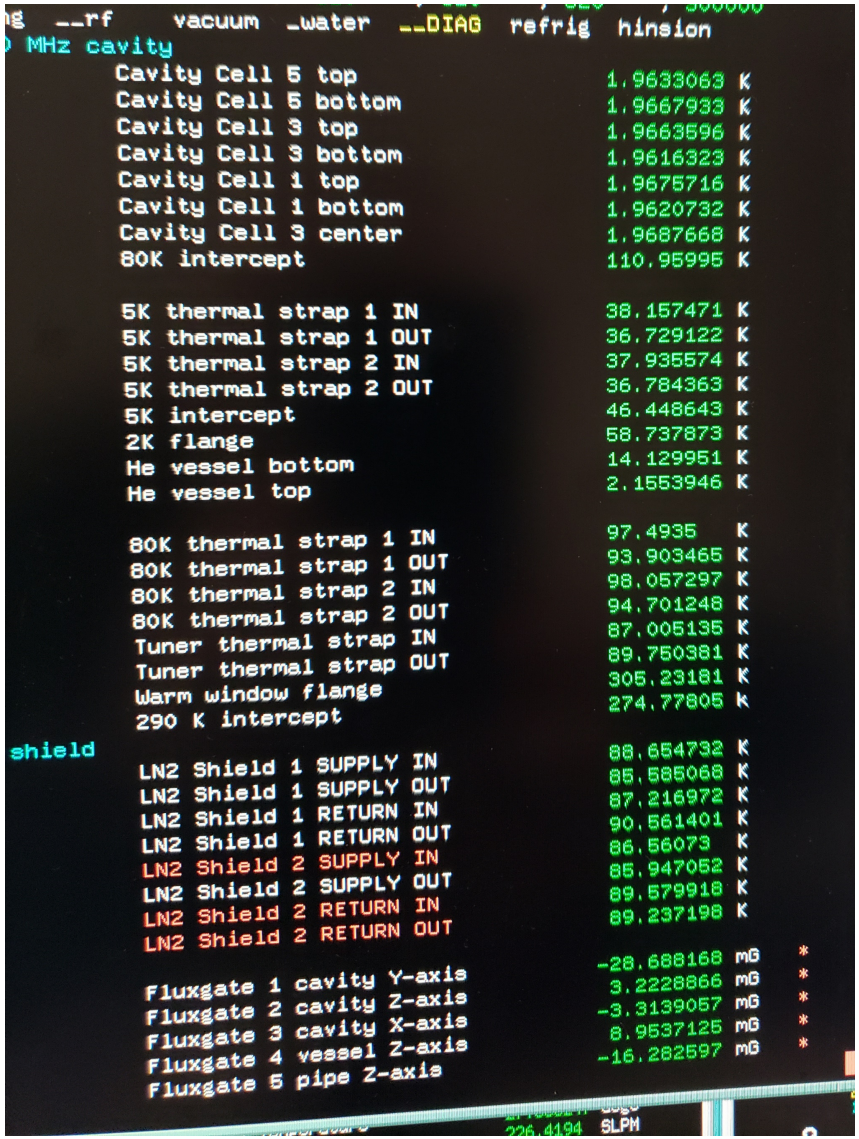

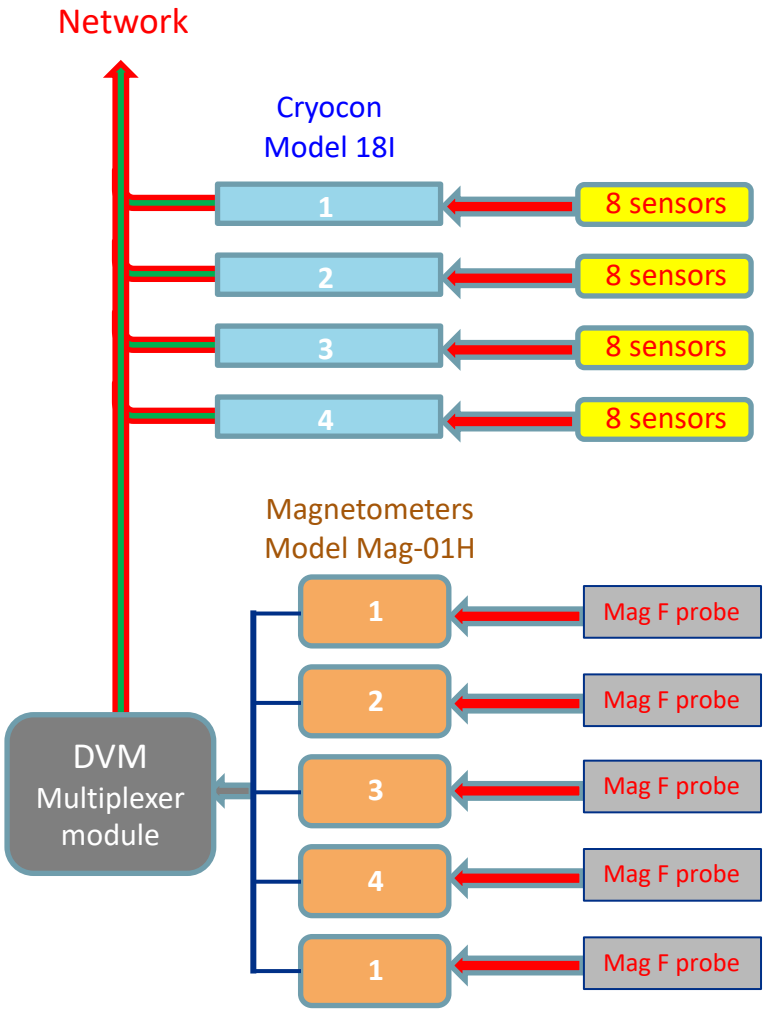

Wiring

Temperature sensors for STC tests stand (Feb 4, 2020)

Sensor			Cable label	Cryostat flange			Cable			Cryocon		Acnet	
NAME:	S/N	Type	Hypertronics 4 pins Connecror	Flange ID:	19 pin Connector ID:	Pins ID:	19 pin connector label	9 pins connector ID	9 pin connector label	Device inputs	Comments:	Node name	Acnet name
RTD 1	X113277	Cernox	a,b,c,d G-J1	G	J-1	A,B,C,D	RTD 1,2,3,4	4,5,8,9	RTD 1,2 G - J1	Cryocon 1 (A/B)	Cavity Cell 1 top	CryoconSTC1	E:HSTX01
RTD 2	X113273	Cernox	e,f,g,h G-J1	G	J-1	E,F,G,H	Flange G - J1	1,2,6,7	Cryocon 1 (A/B)		Cavity Cell 1 bottom	CryoconSTC1	E:HSTX02
RTD 3	X113279	Cernox	j,k,l,m G-J1	G	J-1	J,K,L,M	Cryocon 1	4,5,8,9	RTD 3,4 G - J1	Cryocon 1 (C/D)	Cavity Cell 3 top	CryoconSTC1	E:HSTX03
RTD 4	X113276	Cernox	n,p,r,s G-J1	G	J-1	N,P,R,S	(A/B/C/D)	1,2,6,7	Cryocon 1 (C/D)		Cavity Cell 3 bottom	CryoconSTC1	E:HSTX04
RTD 5	X113280	Cernox	a,b,c,d G-J2	G	J-2	A,B,C,D	RTD 5,6,7,8	4,5,8,9	RTD 5,6 G - J2	Cryocon 1 (E/F)	Cavity Cell 5 top	CryoconSTC1	E:HSTX05
RTD 6	X113674	Cernox	e,f,g,h G-J2	G	J-2	E,F,G,H	Flange G - J2	1,2,6,7	Cryocon 1 (E/F)		Cavity Cell 5 bottom	CryoconSTC1	E:HSTX06
RTD 7	X113275	Cernox	j,k,l,m G-J2	G	J-2	J,K,L,M	Cryocon 1	4,5,8,9	RTD 7,8 G - J2	Cryocon 1 (G/H)	Cavity Cell 3 center	CryoconSTC1	E:HSTX07
RTD 8	X59930	Cernox	n,p,r,s G-J2	G	J-2	N,P,R,S	(E/F/G/H)	1,2,6,7	Cryocon 1 (G/H)		80K intercept SS tube	CryoconSTC1	E:HSTX08
RTD 9	X53809	Cernox	a,b,c,d G-J3	G	J-3	A,B,C,D	RTD 9,10,11,12	4,5,8,9	RTD 9,10 G - J3	Cryocon 2 (A/B)	5K thermal strap 1 in	CryoconSTC2	E:HSTX09
RTD 10	X53810	Cernox	e,f,g,h G-J3	G	J-3	E,F,G,H	Flange G - J3	1,2,6,7	Cryocon 2 (A/B)		5K thermal strap 1 out	CryoconSTC2	E:HSTX10
RTD 11	X85635	Cernox	j,k,l,m G-J3	G	J-3	J,K,L,M	Cryocon 2	4,5,8,9	RTD 11,12 G - J3	Cryocon 2 (C/D)	5K thermal strap 2 in	CryoconSTC2	E:HSTX11
RTD 12	X92182	Cernox	n,p,r,s G-J3	G	J-3	N,P,R,S	(A/B/C/D)	1,2,6,7	Cryocon 2 (C/D)		5K thermal strap 2 out	CryoconSTC2	E:HSTX12
RTD 13	X85641	Cernox	a,b,c,d G-J4	G	J-4	A,B,C,D	RTD	4,5,8,9	RTD 13,14 G - J4	Cryocon 2 (E/F)	5K intercept (SS tube)	CryoconSTC2	E:HSTX13
RTD 14	X50631	Cernox	e,f,g,h G-J4	G	J-4	E,F,G,H	13,14,15,16	1,2,6,7	Cryocon 2 (E/F)		2K coupler flange	CryoconSTC2	E:HSTX14
RTD 15	X85727	Cernox	j,k,l,m G-J4	G	J-4	J,K,L,M	Flange G - J4	4,5,8,9	RTD15,16 G - J4	Cryocon 2 (G/H)	He vessel bottom	CryoconSTC2	E:HSTX15
RTD 16	X85640	Cernox	n,p,r,s G-J4	G	J-4	N,P,R,S	Cryocon 2	1,2,6,7	Cryocon 2 (G/H)		He vessel top	CryoconSTC2	E:HSTX16
RTD 17	P30781	PT102	a,b,c,d L-J1	K	J-3	A,B,C,D	RTD	4,5,8,9	RTD 17,18 K - J3	Cryocon 3 (A/B)	80K thermal strap 1 in	CryoconSTC3	E:HSTX17
RTD 18	P31735	PT102	e,f,g,h L-J1	K	J-3	E,F,G,H	17,18,19,20	1,2,6,7	Cryocon 3 (A/B)		80K thermal strap 1 out	CryoconSTC3	E:HSTX18
RTD 19	P21060	PT102	j,k,l,m L-J1	K	J-3	J,K,L,M	Flange K - J3	4,5,8,9	RTD 19,20 K - J3	Cryocon 3 (C/D)	80K thermal strap 2 in	CryoconSTC3	E:HSTX19
RTD 20	P15112	PT102	n,p,r,s L-J1	K	J-3	N,P,R,S	Cryocon 3	1,2,6,7	Cryocon 3 (C/D)		80K thermal strap 2 out	CryoconSTC3	E:HSTX20
RTD 21	P15107	PT102	a,b,c,d F-J4	H	J-3	A,B,C,D	RTD	4,5,8,9	RTD 21,22 H - 3	Cryocon 3 (E/F)	Tuner thermal strap in	CryoconSTC3	E:HSTX21
RTD 22	P15113	PT102	e,f,g,h F-J4	H	J-3	E,F,G,H	21,22,23,24	1,2,6,7	Cryocon 3 (E/F)		Tuner thermal strap out	CryoconSTC3	E:HSTX22
RTD 23	P43588	PT102	J,K,L,M F-J4	H	J-3	J,K,L,M	Flange H-J3	4,5,8,9	RTD 23,24 H - J3	Cryocon 3 (G/H)	Warm flange	CryoconSTC3	E:HSTX23
RTD 24	P43589	PT102	n,p,r,s F-J4	H	J-3	N,P,R,S	Cryocon 3	1,2,6,7	Cryocon 3 (G/H)		290 K intercept (SS tube)	CryoconSTC3	E:HSTX24
RTD 25	P23634	PT102	a,b,c,d H-J1	H	J-1	A,B,C,D	RTD	4,5,8,9	RTD 25,26 H - J1	Cryocon 4 (A/B)	Thermal shield	CryoconSTC4	Z:HSTPS3
RTD 26	P22599	PT102	e,f,g,h H-J1	H	J-1	E,F,G,H	25,26,27,28	1,2,6,7	Cryocon 4 (A/B)		Thermal shield	CryoconSTC4	Z:HSTPS4
RTD 27	P27423	PT102	j,k,l,m H-J1	H	J-1	J,K,L,M	Flange H - J1	4,5,8,9	RTD 27,28 H - J1	Cryocon 4 (C/D)	Thermal shield	CryoconSTC4	Z:HSTPS5
RTD 28	P23633	PT102	n,p,r,s H-J1	H	J-1	N,P,R,S	Cryocon 4	1,2,6,7	Cryocon 4 (C/D)		Thermal shield	CryoconSTC4	Z:HSTPS6
RTD 29	P22211	PT102	a,b,c,d H-J2	H	J-2	A,B,C,D	RTD	4,5,8,9	RTD 29,30 H - J2	Cryocon 4 (E/F)	Thermal shield	CryoconSTC4	Z:HSTPS7
RTD 30	P22212	PT102	e,f,g,h H-J2	H	J-2	E,F,G,H	29,30,31,32	1,2,6,7	Cryocon 4 (E/F)		Thermal shield	CryoconSTC4	Z:HSTPS8
RTD 31	P23626	PT102	j,k,l,m H-J2	H	J-2	J,K,L,M	Flange H - J2	4,5,8,9	RTD 31,32 H - J2	Cryocon 4 (G/H)	Thermal shield	CryoconSTC4	Z:HSTPS9
RTD 32	P27355	PT102	n,p,r,s H-J2	H	J-2	N,P,R,S	Cryocon 4	1,2,6,7	Cryocon 4 (G/H)		Thermal shield	CryoconSTC4	Z:HSTP10
RTD 33	21051	PT100	j,k,l,m F-J4	F	J-4	J,K,L,M	RTD 33 (F-J2)		Terminal block	TPN10	Interlock		H:SCRTD7

Magnet probe and Heaters

			Fluxgate sensors for STC tests stand Feb 4, 2020)										
Probe			Cable label	Cryostat flange			Cable			Magnetometer		Acnet	
MagF probe	S/N	Type	Hypertronics 4 pins Connecror	Flange ID:	19 pin Connector ID:	Pins ID:	19 pin connector label	19 pin Connector ID:	4 pin connector label	Device inputs	Comments:	Node name	Acnet name
MagF-1	1812	F	a,b,c,d L-J3	L	J-3	A,B,C,D	MagF-1,2,3,4 Flange L - J3	A,B,C,D	MagF-1	Mag-01H-01	Cavity X	Cavity X	E:HSTFG1
MagF-2	1813	F	e,f,g,h L-J3	L	J-3	E,F,G,H		E,F,G,H	MagF-2	Mag-01H-02	Cavity Y	Cavity Y	E:HSTFG2
MagF-3	1814	F	j,k,l,m L-J3	L	J-3	J,K,L,M		J,K,L,M	MagF-3	Mag-01H-03	Cavity Z	Cavity Z	E:HSTFG3
MagF-4	1413	F	n,p,r,s L-J3	L	J-3	N,P,R,S		N,P,R,S	MagF-4	Mag-01H-04	He vessel top Z	Cryostat	E:HSTFG4
MagF-5	1414	F	a,b,c,d L-J4	L	J-4	A,B,C,D	MagF-5,6,7,8 Flange L - J4	A,B,C,D	MagF-5	Mag-01H-05	Beam pipe top Z	Cryostat	E:HSTFG5
MagF-6		F	e,f,g,h L-J4	L	J-4	E,F,G,H		E,F,G,H			Spare	Spare	E:HSTFG6
MagF-7		F	j,k,l,m L-J4	L	J-4	J,K,L,M		J,K,L,M			Spare	Spare	E:HSTFG7
MagF-8		F	n,p,r,s L-J4	L	J-4	N,P,R,S		N,P,R,S			Spare	Spare	E:HSTFG8

			Hypertronics 4 pins				19 pin connector		Single plugs					
Heater	#1	HTR-50	a,b,c,d L-J2	L	J-2	A,B,C,D	Heater #1	a,b,c,d	A,B,C,D	Power supply 1	Warm flange (ceramic window)			46.30 Ohm, 50W
Heater	#2	HTR-50	e,f,g,h L-J2	L	J-2	E,F,G,H	Heater #2	e,f,g,h	E,F,G,H					46.26 Ohm, 50W
Heater	#3	HTR-50	j,k,l,m L-J2	L	J-2	J,K,L,M	Heater #3	j,k,l,m	J,K,L,M					46.07 Ohm, 50W
Heater			1,2	K	J-4	1,2								140 Ohm

Temp. Measurement; Static mode

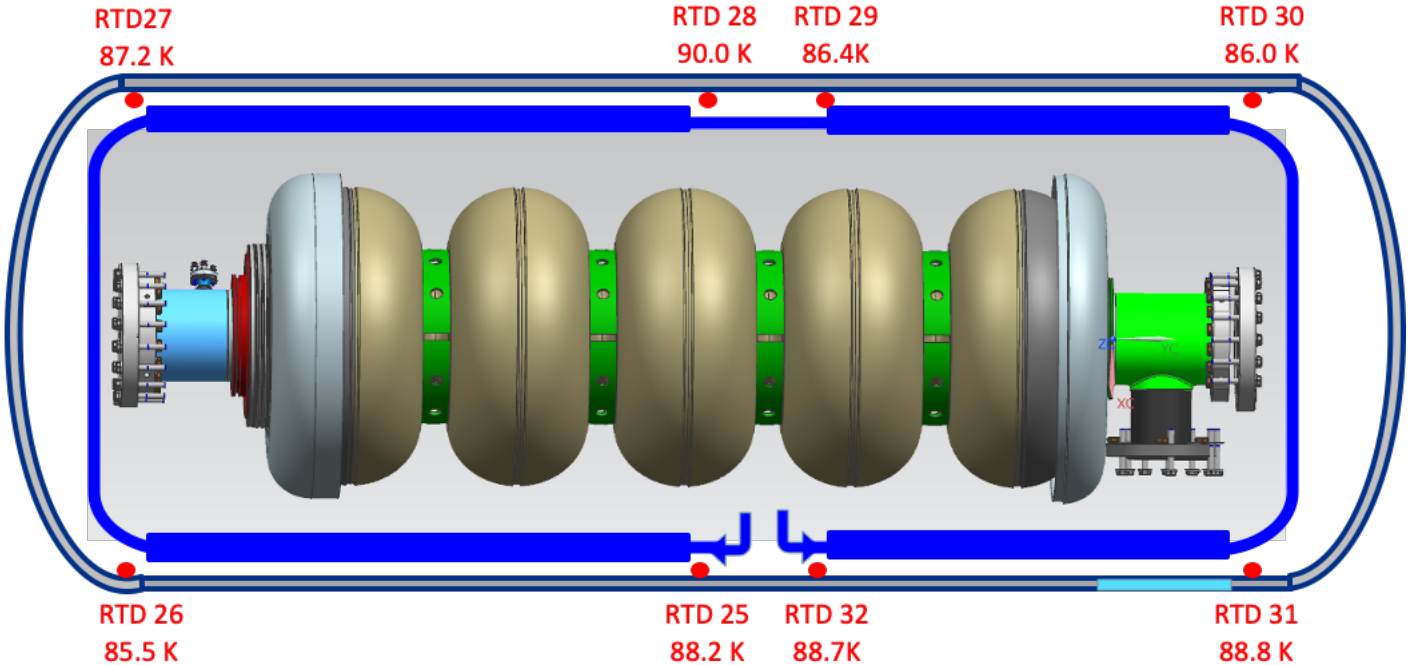

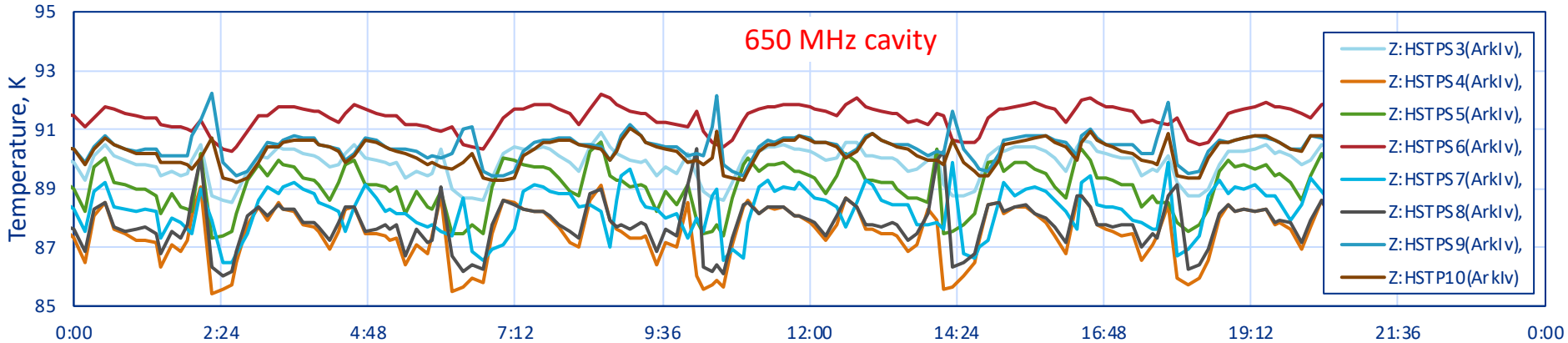

Temp. Measurement; Static mode

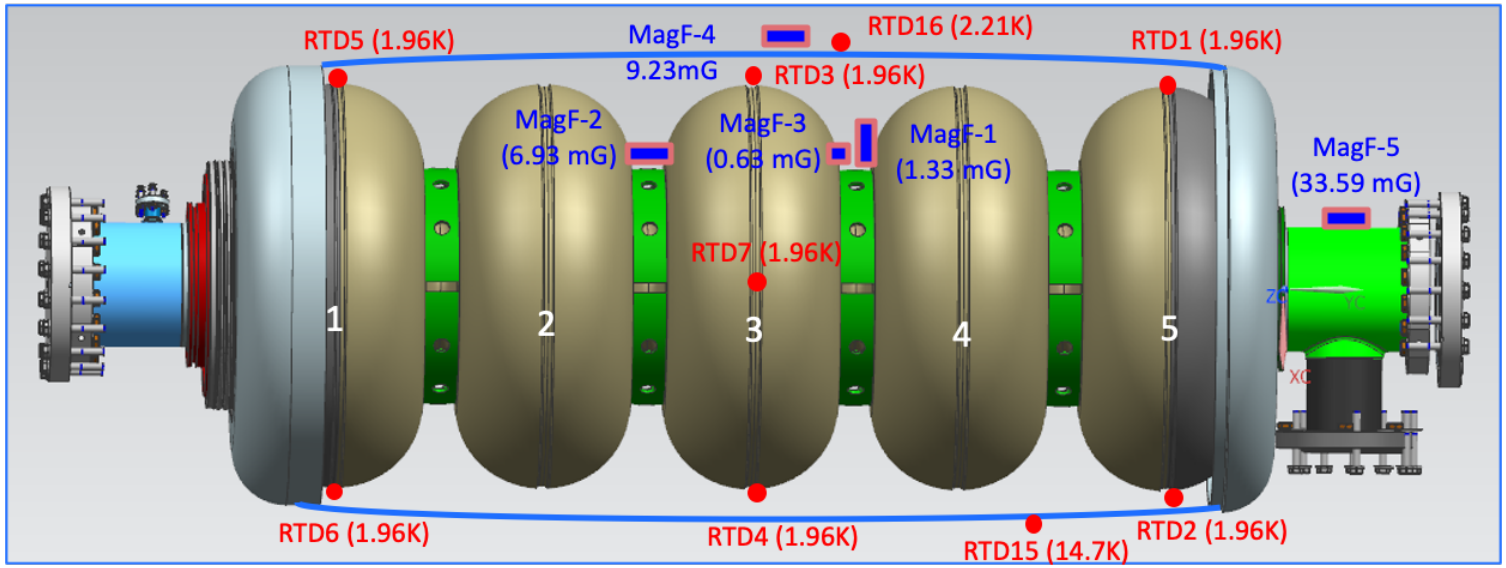

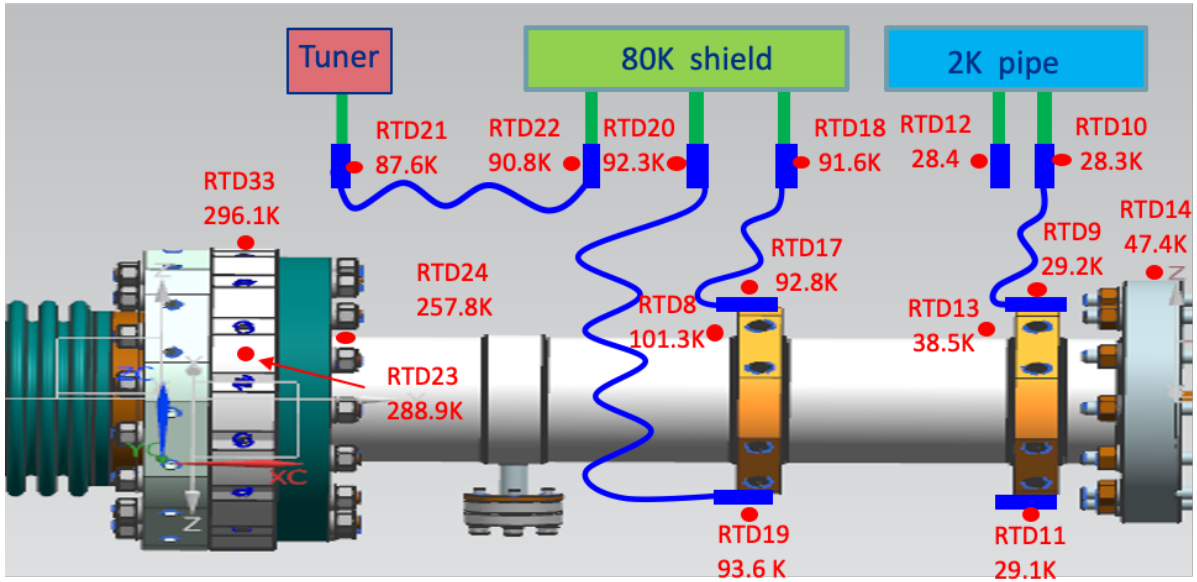

Static heat load for 5K and 80K intercepts (thermal straps)

	Run	RF power	Field	5K Strap 1		5K Strap 2		dT		Average		Conductance	5K heat load (straps)		
Date	Mode	VSPWM	VSCAVE	E:HSTX09	E:HSTX10	E:HSTX11	E:HSTX12	dT Strap 1	dT Strap 2	<T1>	<T2>	k	Heat 1	Heat 2	Total
		MW	MV/m	K	K	K	K	K	K	K	K	W/K	W	W	W
1/30/2020	static	0	0	29.59	28.77	29.59	28.79	0.82	0.80	29.18	29.19	1.22	1.00	0.98	1.98

	Run	RF power	Field	80K Strap 1		80K Strap 2		dT		Average		Conductance	80K heat load (straps)		
Date	mode	VSPWM	VSCAVE	E:HSTX17	E:HSTX18	E:HSTX19	E:HSTX20	dT Strap 1	dT Strap 2	<T1>	<T2>	k	Heat 1	Heat 2	Heat, W
		MW	MV/m	K	K	K	K	K	K	K	K	W/K	W	W	W
1/30/2020	static	0	0	94.12	92.77	94.54	93.35	1.35	1.19	93.45	93.95	0.38	0.52	0.46	0.98

		RF power	Field	Tuner strap					
	Mode	VSPWM	VSCAVE	E:HSTX21	E:HSTX22	dT	Average	k	Heat
		MW	MV/m	K	K	K	K	W/K	W
1/30/2020	static	0	0	89.23	91.60	2.37	90.4	0.124	0.29

Heat load estimation based on the SS coupler tube thermal conductivity

650 MHz power coupler

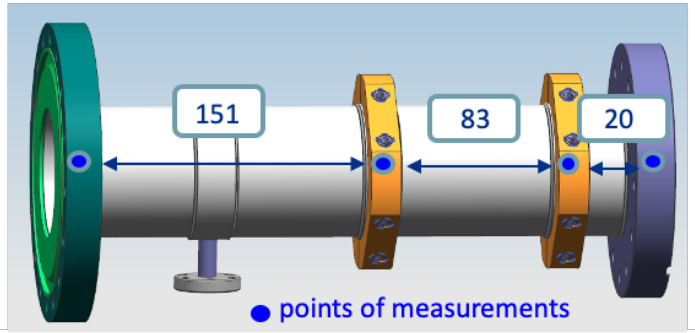

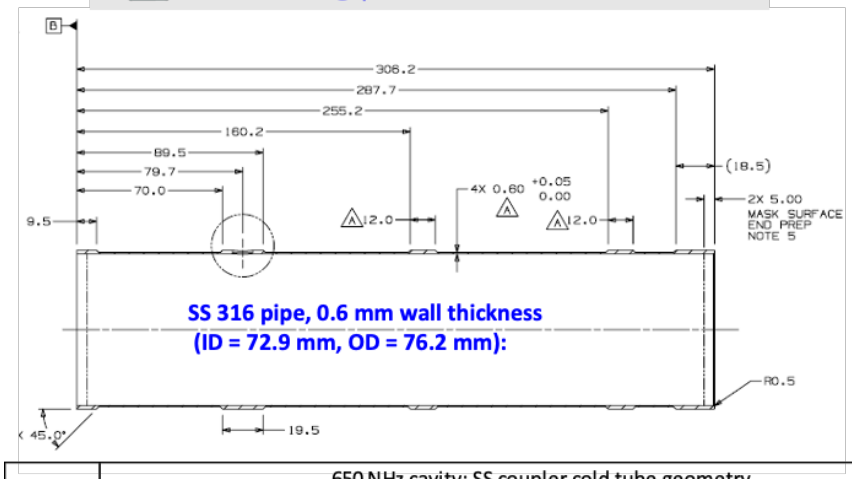

	650 NHz cavity: SS coupler cold tube geometry								
L,mm	9.5	60.5	19.5	70.7	12	83	12	20.5	18.5
OD, mm	76.2	74.1	76.2	74.1	76.2	74.1	76.2	74.1	76.2
ID,mm	72.9	72.9	72.9	72.9	72.9	72.9	72.9	72.9	72.9
wall, mm	1.65	0.6	1.65	0.6	1.65	0.6	1.65	0.6	1.65
A/L, m		1.00E-03				1.67E-03		6.75E-03	

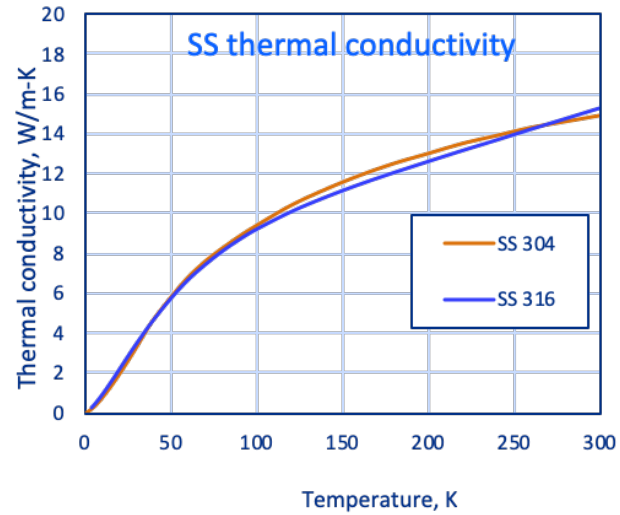

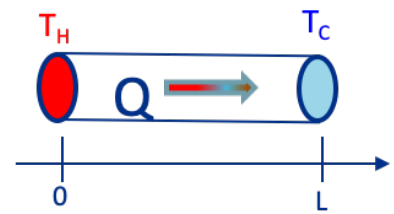

$Q = k\,(T_H - T_C)\,A/L$

Q – heat (W)

K - thermal conductivity (W/m-K)

A - cross section (m^2)

L - length (m)

Static heat load for 5K and 80K intercepts (SS tube)

	SS coupler tube		290K-80K	290K-80K			
	HSTX23	<HSTX17,18>	<T>, K	dT, K	k, W/m-K	A/L, m	P, W
static	288.9	93.2	191.05	195.7	11.37	1.00E-03	2.23

	SS coupler tube		80K - 5K	80K - 5K			
	<HSTX17,19>	<HSSCTX09.11>	<T>, K	dT, K	k, W/m-K	A/L, m	P, W
static	93.2	29.2	61.2	64.0	6.7	1.67E-03	0.7

	SS coupler tube		5K - 2K	5K - 2K			
	SCTX14	<HSSCTX09.11>	<T>, K	dT, K	k, W/m-K	A/L, m	P, W
static	47.4	29.2	38.3	18.2	4.27	6.75E-03	0.5

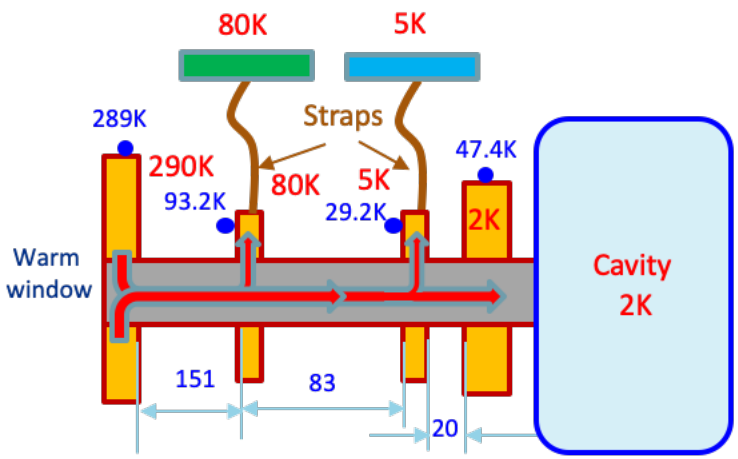

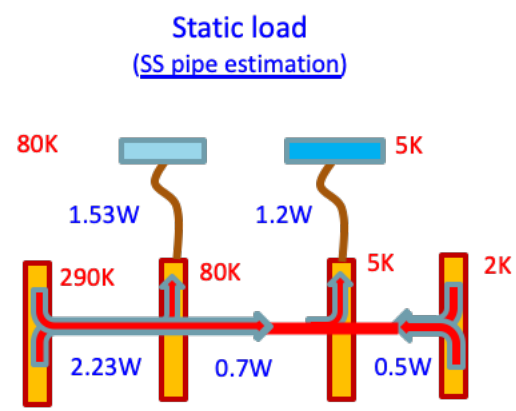

Static heat load for 5K and 80K intercepts, Comparing measurements and estimations

	Power	Estimations	Heat load, W		
Date	W		80K	5K	2K
30-Jan-20	0	Thermal straps	0.98	1.98	
31-Jan-20	0	SS tube	1.53	0.7	-0.5
	0	Simulation	3.0	1.47	0.07

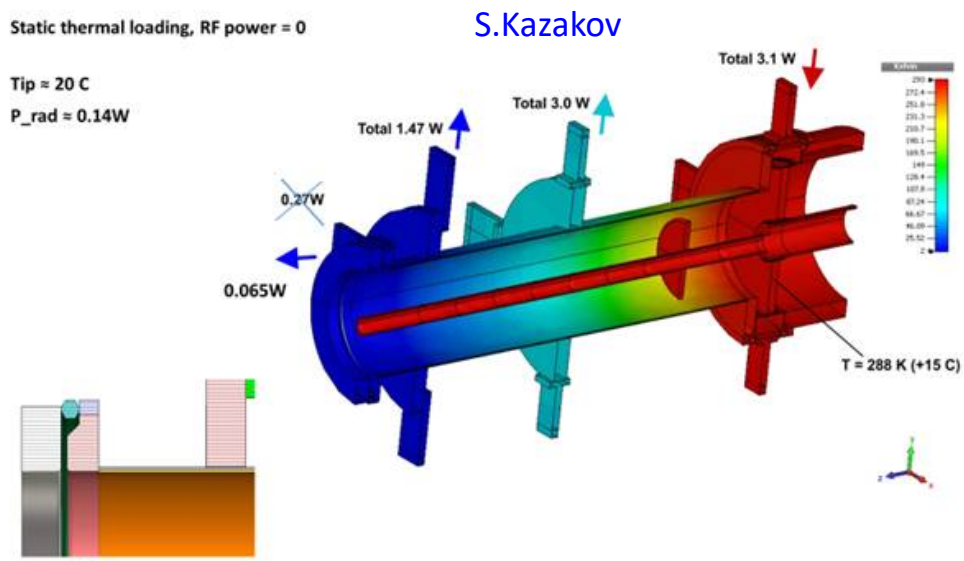

Warm flange heater operation (Static mode)

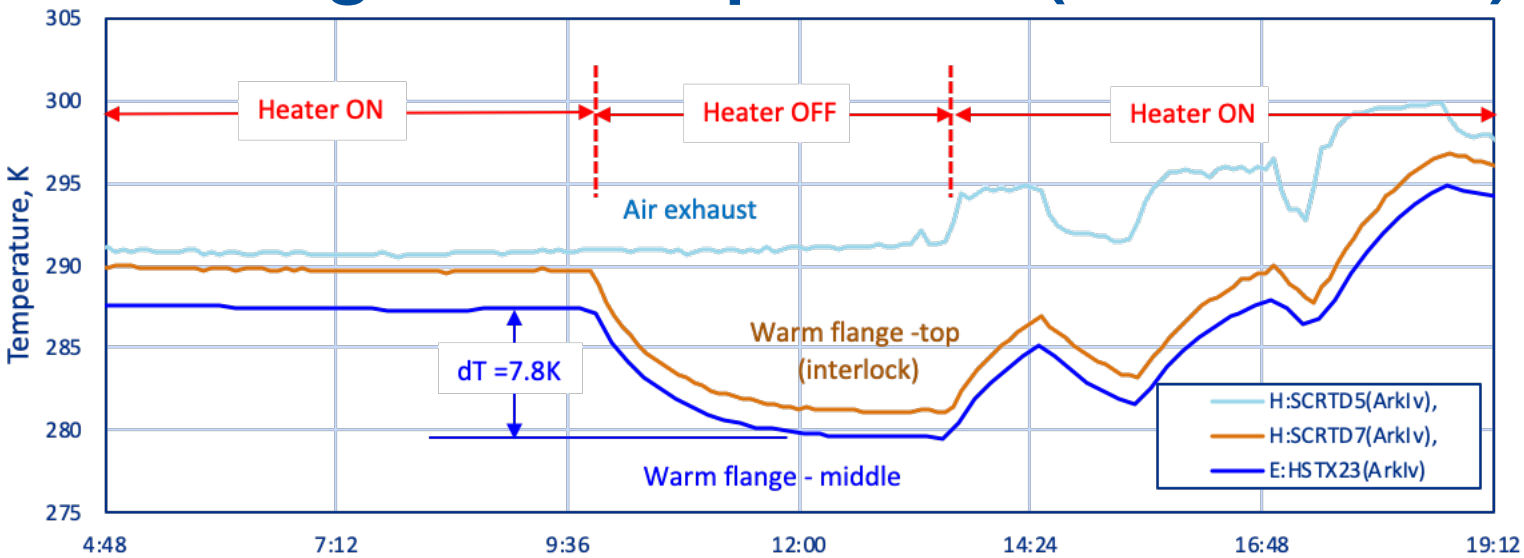

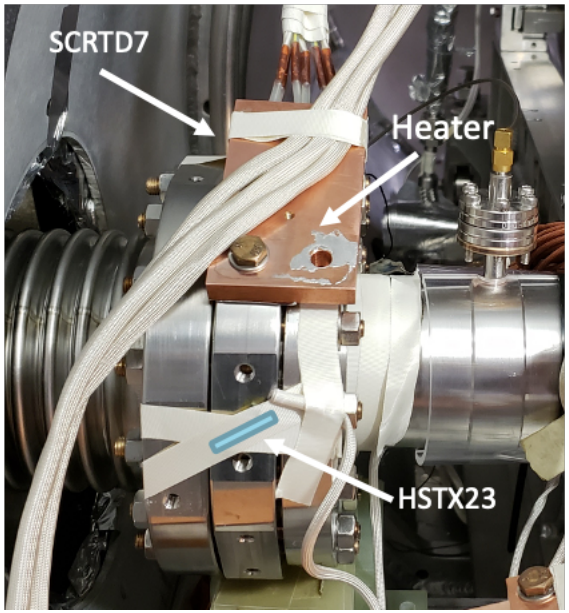

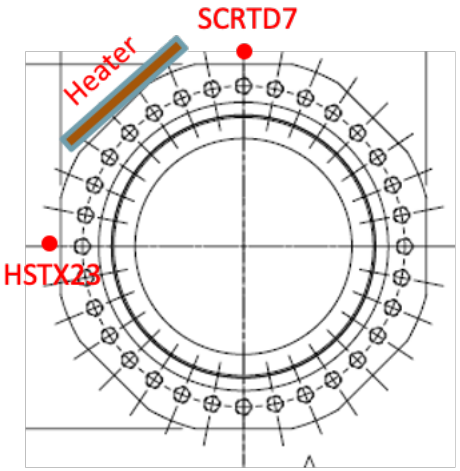

The heater installed on the warm coupler flange must be constantly turned on at 10W to prevent the ceramic window from freezing. In this test at static mode, the heater was powered off to understand how critical the operation of the heater was.

From measurements it follows that the temperature dropped by about 8K but the absolute temperature of 280K was still high.

OFF resonance coupler temperature data

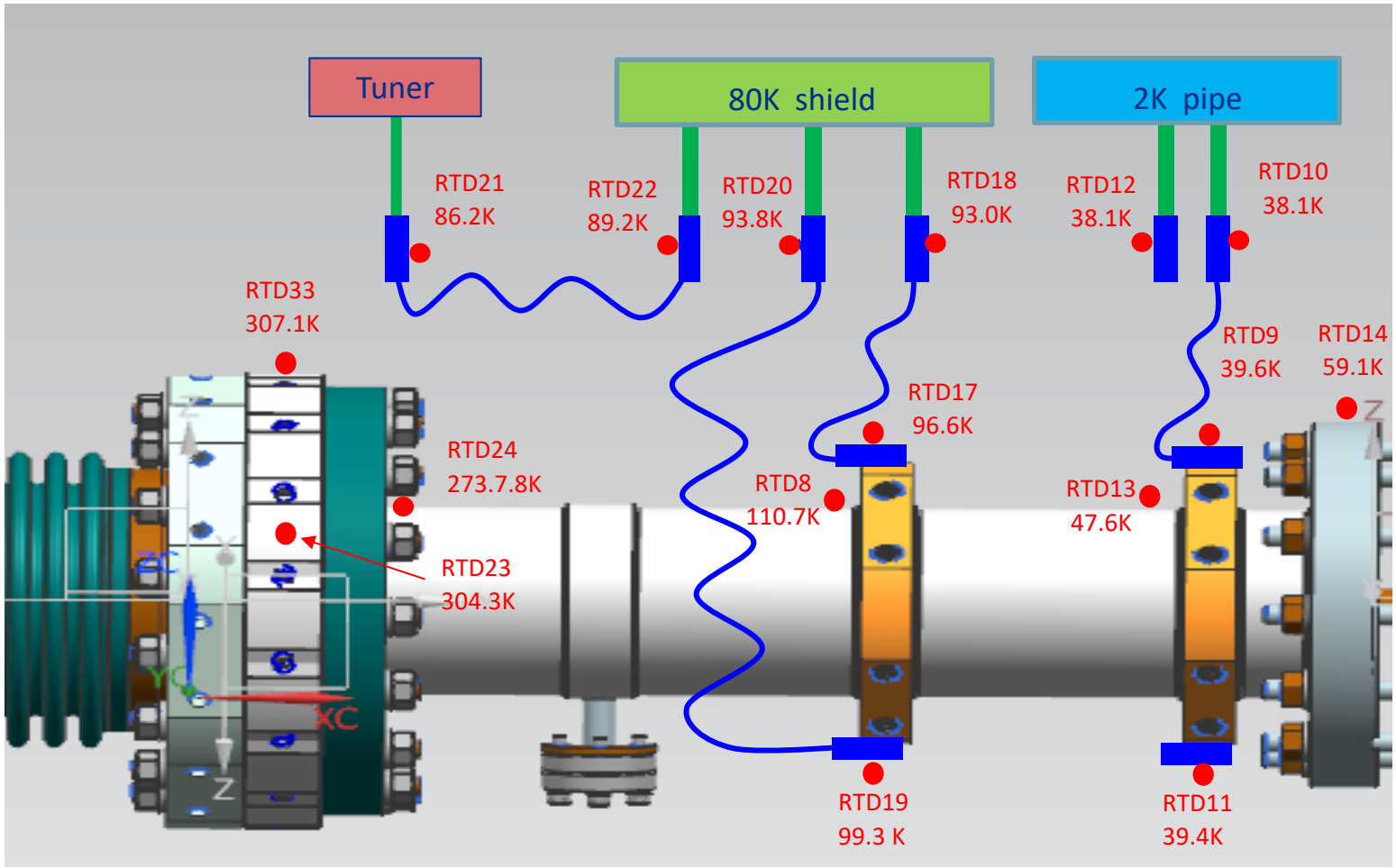

OFF resonance, 5K and 80K thermal straps

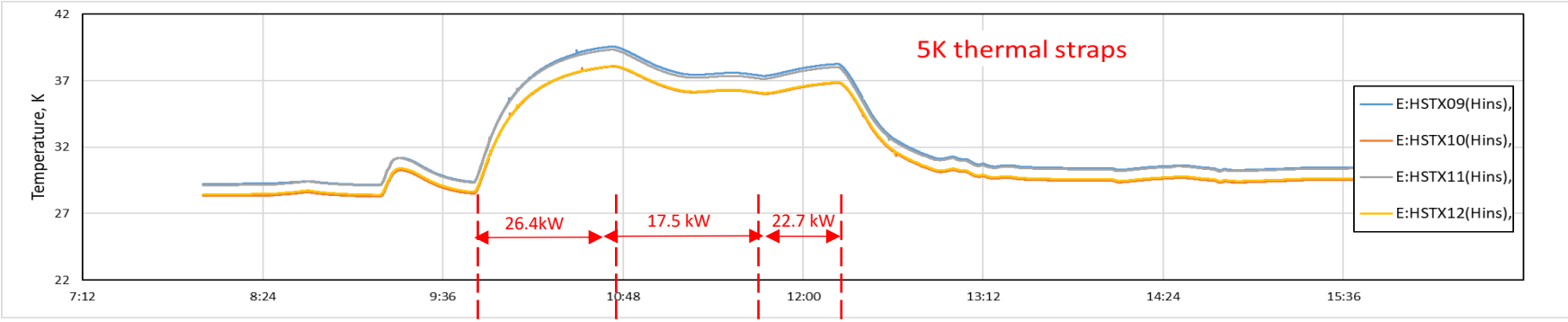

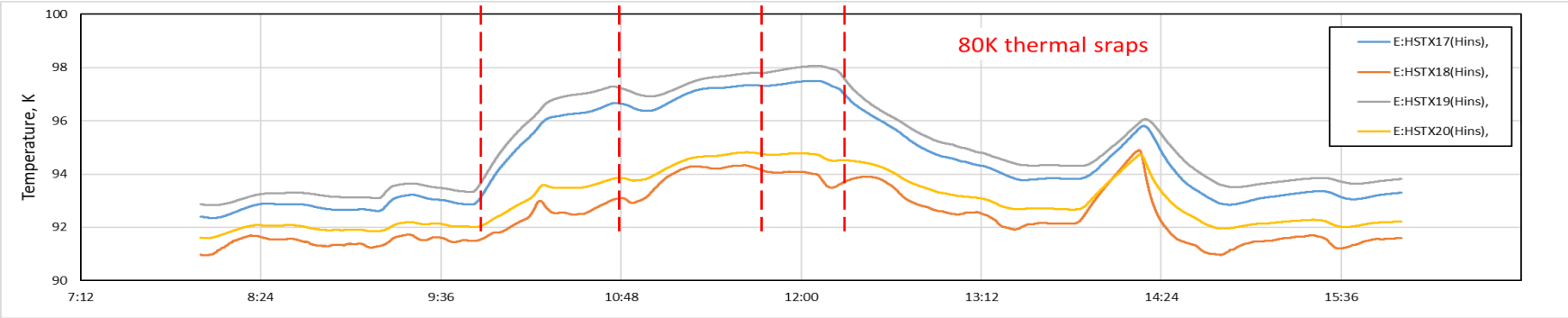

	Run	RF power	Field	5K Strap 1		5K Strap 2		dT		Average		Conductance	5K heat load (straps)		
Date	Mode	VSPWM	VSCAVE	E:HSTX09	E:HSTX10	E:HSTX11	E:HSTX12	dT Strap 1	dT Strap 2	<T1>	<T2>	k	Heat 1	Heat 2	Total
		MW	MV/m	K	K	K	K	K	K	K	K	W/K	W	W	W
1/30/2020	Dynamic	26.4	0	39.58	38.07	39.35	38.11	1.50	1.24	38.83	38.73	1.02	1.53	1.27	2.80

	Run	RF power	Field	80K Strap 1		80K Strap 2		dT		Average		Conductance	80K heat load (straps)		
Date	mode	VSPWM	VSCAVE	E:HSTX17	E:HSTX18	E:HSTX19	E:HSTX20	dT Strap 1	dT Strap 2	<T1>	<T2>	k	Heat 1	Heat 2	Heat, W
		MW	MV/m	K	K	K	K	K	K	K	K	W/K	W	W	W
1/30/2020	Dynamic	26.4	0	96.64	93.00	97.28	93.80	3.64	3.48	94.82	95.54	0.38	1.39	1.33	2.73