# Transportation Analysis

Dr. Sergey Cheban

Josh Helsper

650 MHz High Beta CM Prototype FDR

29 – 31 July 2020

A Partnership of:

- US/DOE
- India/DAE
- Italy/INFN
- UK/UKRI-STFC
- France/CEA, CNRS/IN2P3
- Poland/WUST

# Cryomodule

- Static structural analysis
- Modal analysis

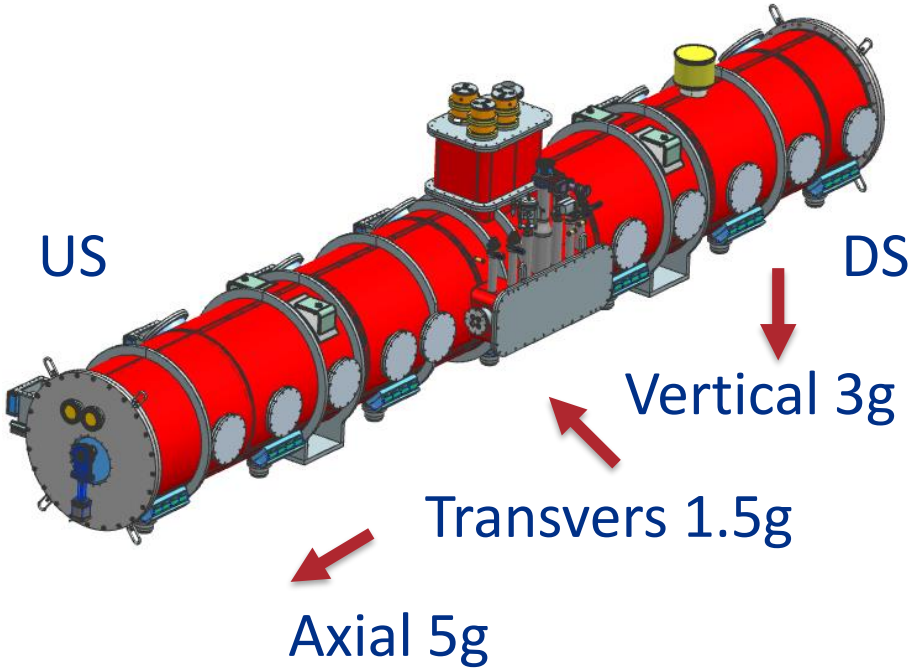


Individual components

- Bellows
- Cavities
- Supports
- Coupler
- Thermal Shield
- Two Phase
- Cooling Lines
- Strongback
- Magnetic Shields

# CAVITY b=09

| Name | Weigh... |
|---|---|
| **ASSEMBLY, LEVER TUNER B09 650 CAVITY** | **61.5253** |

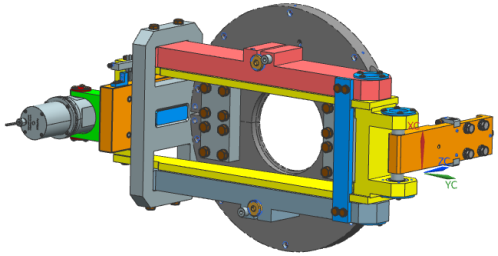

| Name | Weight (kg) | Number |
|---|---|---|
| **HB650 0.9 DRESSED CAVITY ASSEMBLY FOR CRYO...** | **118.8259** | **F10124342** |

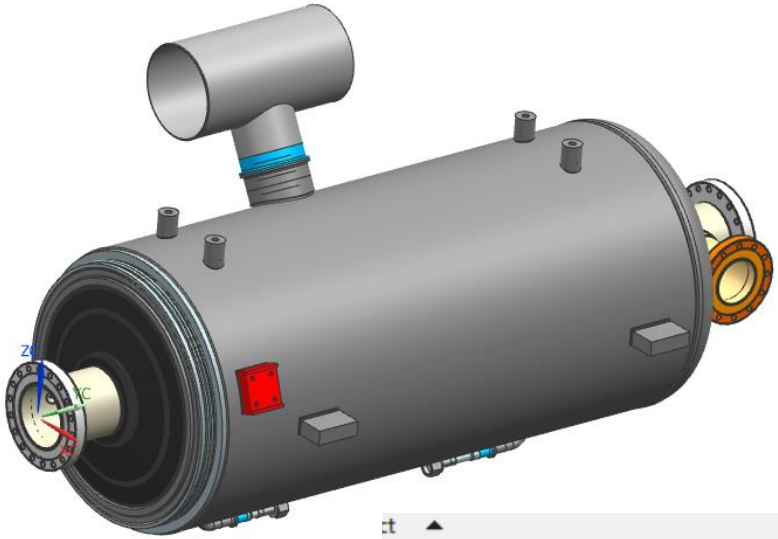

| Name | Weigh... |
|---|---|
| **ASSEMBLY, MAGNETIC SHIELD-650MHz-B9** | **31.9465** |

| ct | MATERIAL | Weight (kg) |
|---|---|---|
| Sections | | |
| **F10071145-F;1-ASSEMBLY, COUPLER VACU...** | | **9.7575** |

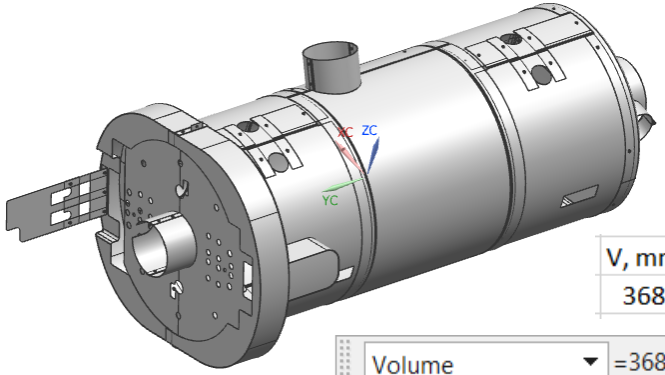

```
Information Units      kg - mm

Density                =    0.000008678
Volume                 = 3681161.524068065
Area                   = 5011993.747018390
Mass                   =   31.946732671
```

| V, mm^3 | ρ, kg/m^3 | m, kg |
|---|---|---|
| 3681162 | 8746.85 | 32.19857 |

Volume =3681161.5241 mm^3

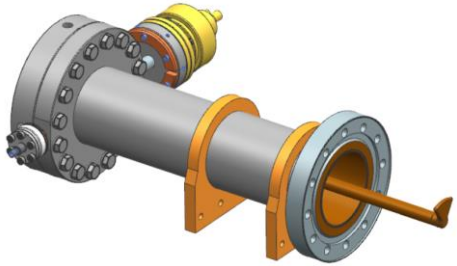

# CAVITY b=092

| Name | Weight (kg) |
|---|---|
| | |
| **ASSEMBLY, LEVER TUNER 650-B92 CAVITY** | **42.7122** |

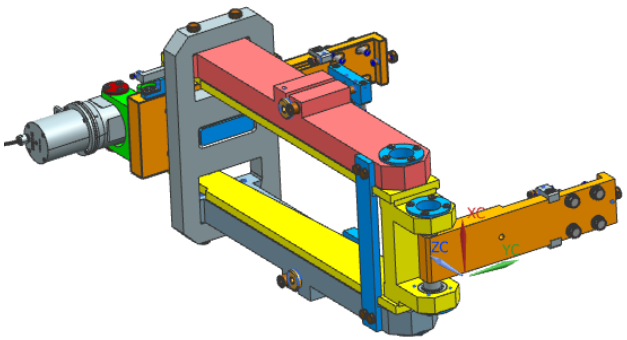


| Name | N | Weight (kg) |
|---|---|---|
| | | |
| **DRESSED CAVITY ASSEMBLY, 650MHz, BETA=0.92** | | **136.6513** |

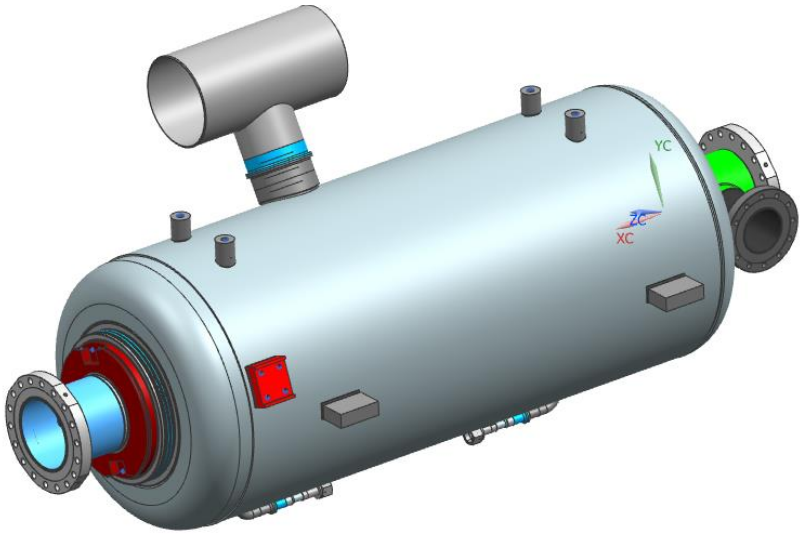


| Name | Weigh... |
|---|---|
| | |
| **ASSEMBLY, MAGNETIC SHIELD-650MHz-B92** | **33.8959** |

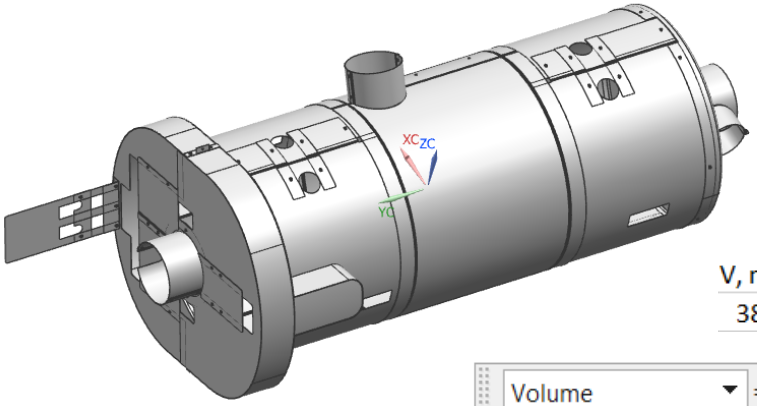


| ct | MATERIAL | Weight (kg) |
|---|---|---|
| Sections | | |
| **F10071145-F;1-ASSEMBLY, COUPLER VACU...** | | **9.7575** |

```
Information Units      kg - mm

Density                =    0.000008738
Volume                 = 3879237.343040901
Area                   = 5277956.295248415
Mass                   =   33.896291783
```

| V, mm^3 | ρ, kg/m^3 | m, kg |
|---|---|---|
| 3879237 | 8746.85 | 33.93111 |

Volume =3879237.3430 mm^3

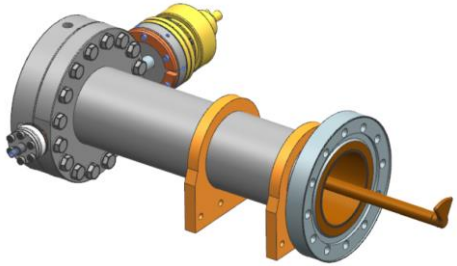

# CAVITY SUPPORT

Mod 1

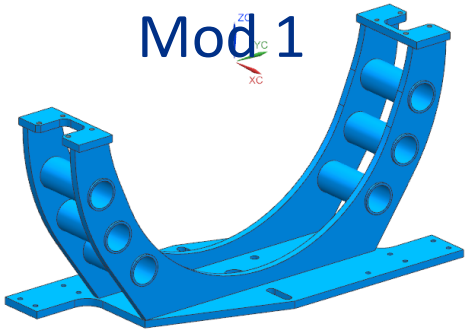

| ▲ | MATERIAL | Weight (kg) | Q. |
|---|---|---|---|
| ctions | | | |
| F10128589--;1-SUPPORT MACHINING FOR DRESE... | | 8.9055 | |

Mod 2

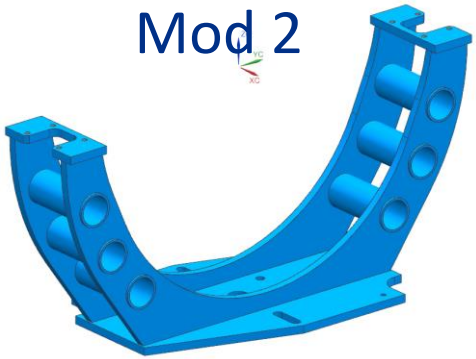

| ▲ | MATERIAL | Weight (kg) | Q. |
|---|---|---|---|
| ctions | | | |
| F10128500--;1-SUPPORT MACHINING FOR DRESED... | | 8.3016 | |

| | MATERIAL | Weight (kg) |
|---|---|---|
| G11 SUPPORT POST - HB650 CM (Or... | | 17.3586 |

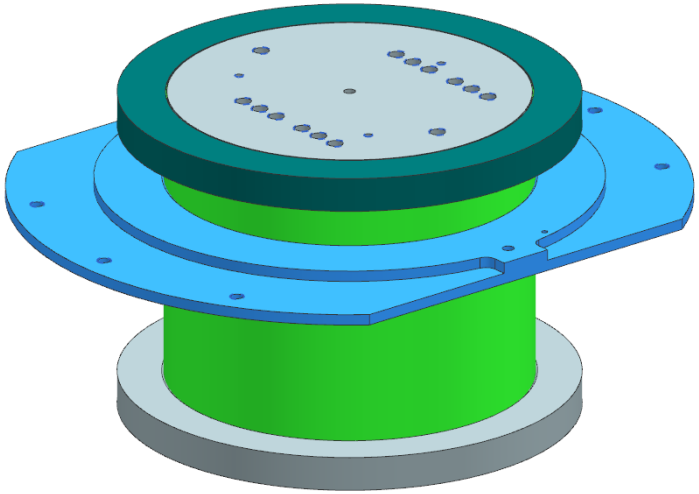

# NEEDLE SUPPORT (0.92)

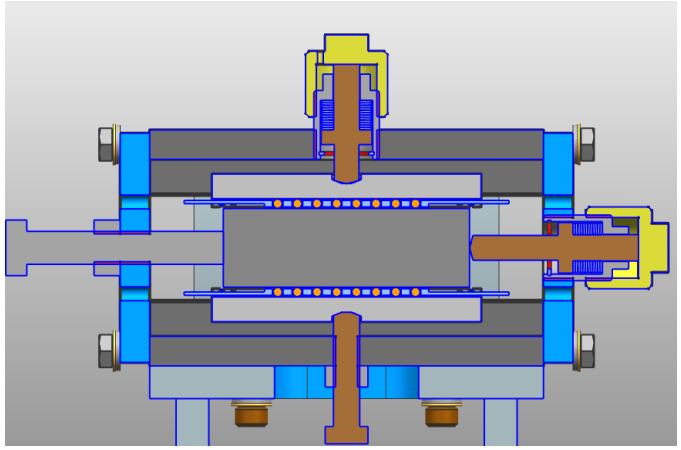

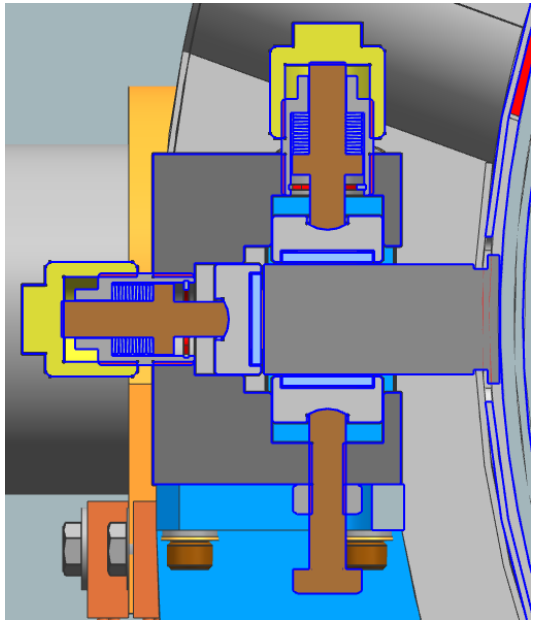

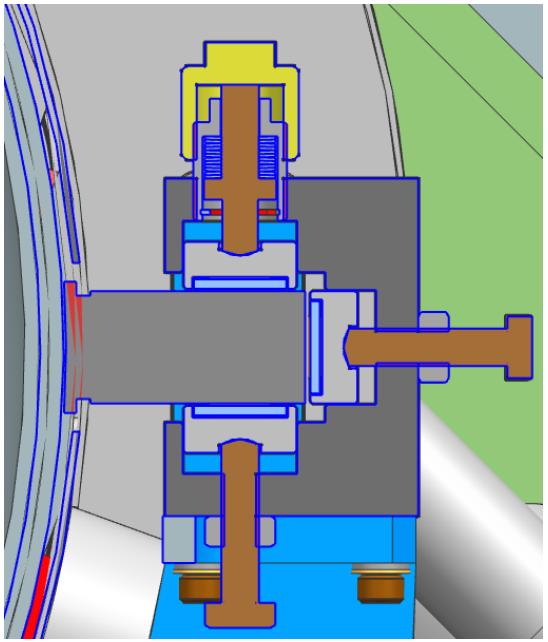

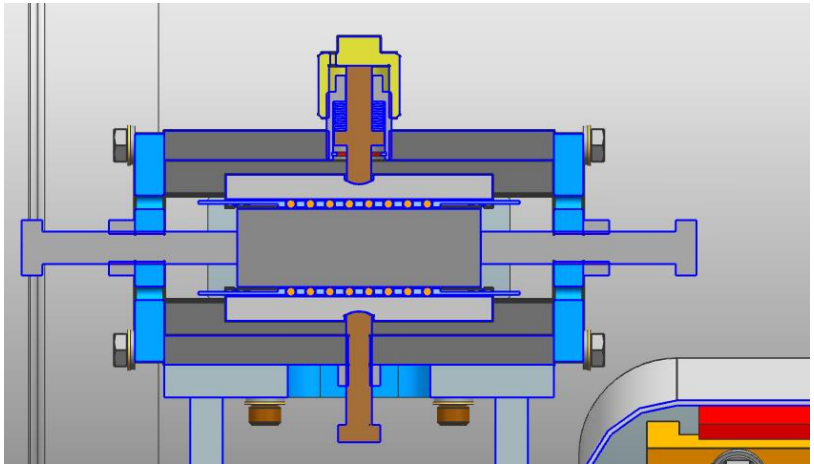

# CAVITY ON SUPPORT

B09

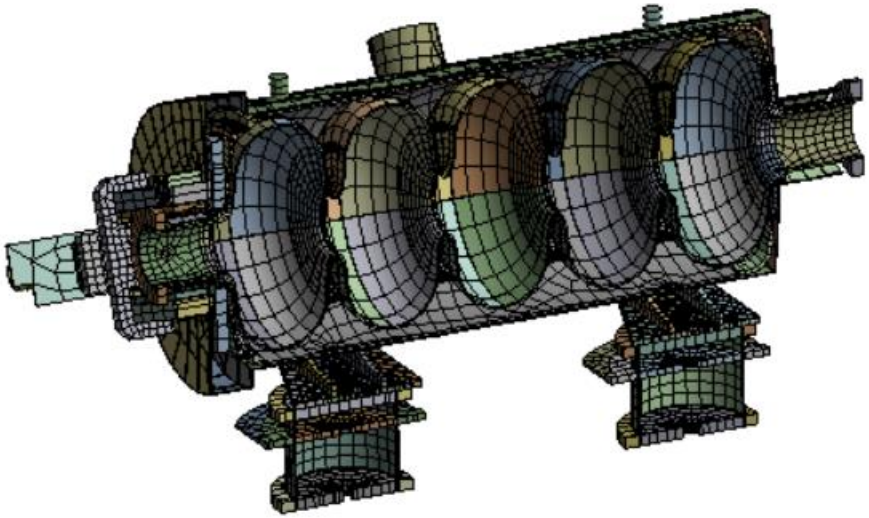

| | |
|---|---|
| Mass | 279.7 kg |

B092

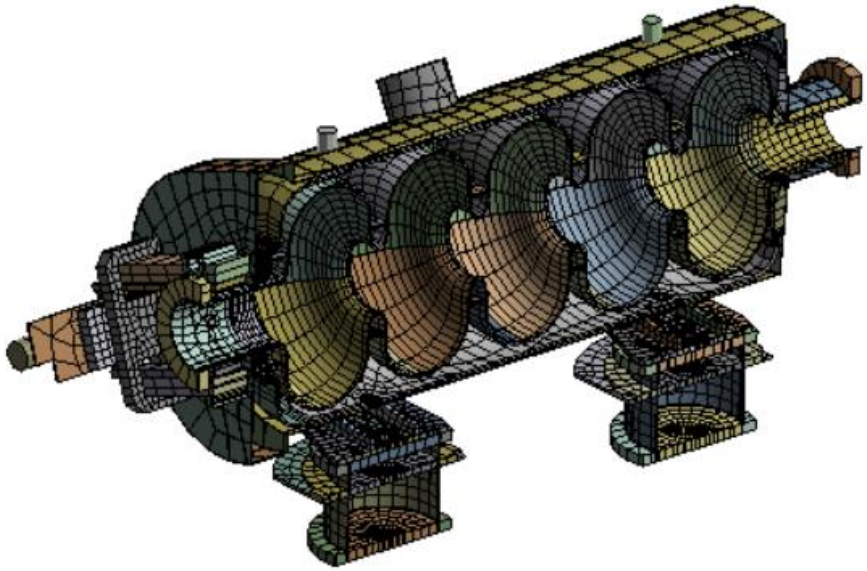

| | |
|---|---|
| Mass | 264.91 kg |

# B-90 Cavity: Modal

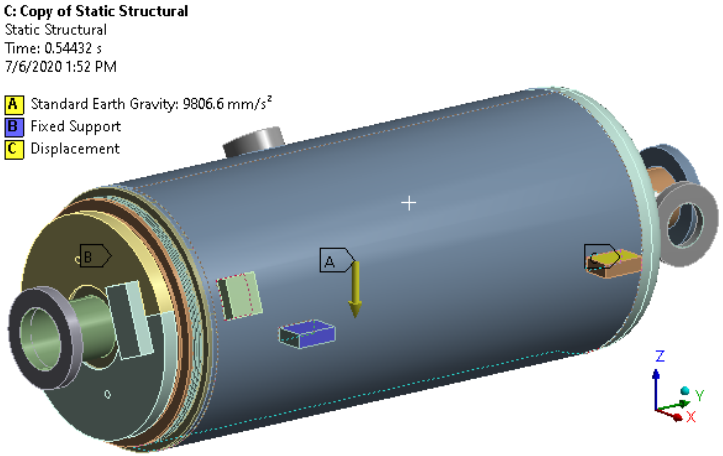


74 Hz

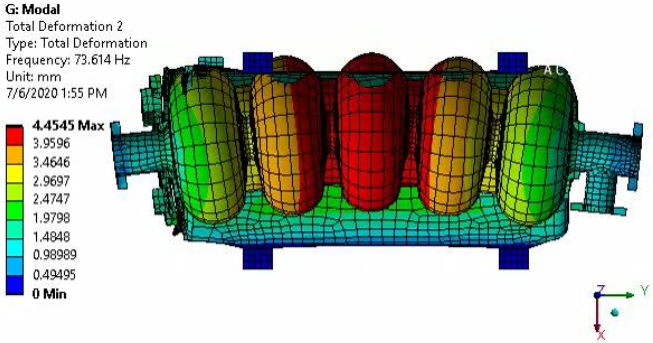


110 Hz

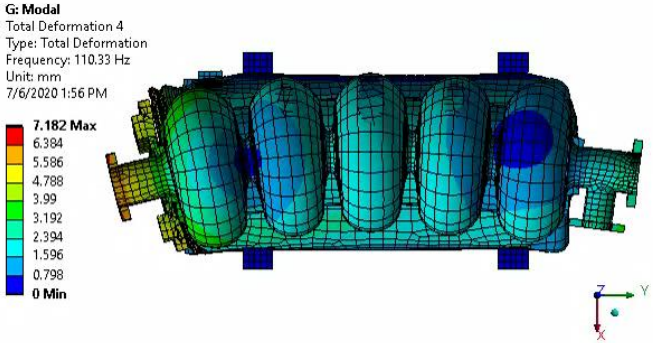


123 Hz

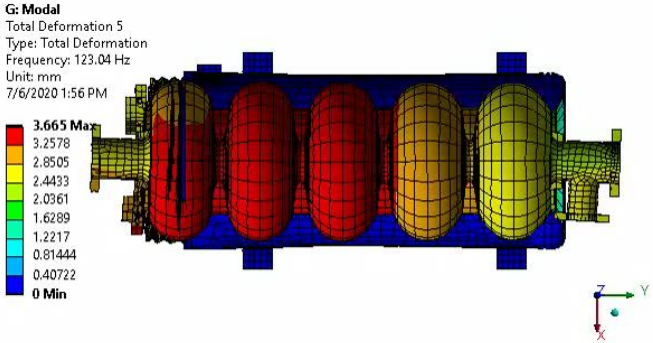


Results comparable with report by N. Nigam (ED0010266)

# B-90 Cavity: 5G-3G-1.5G

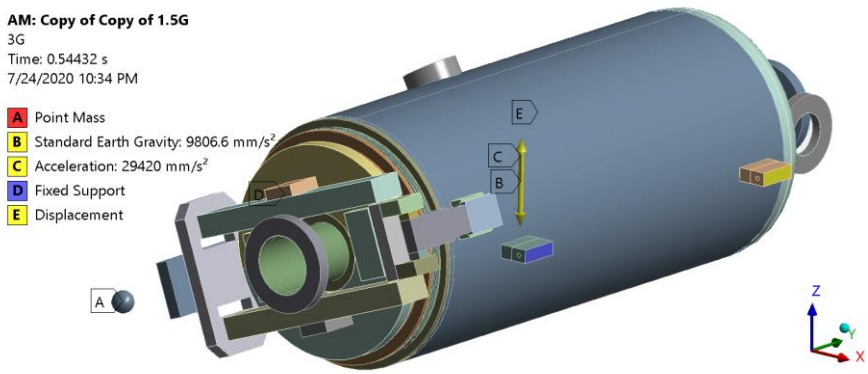


3G Stress

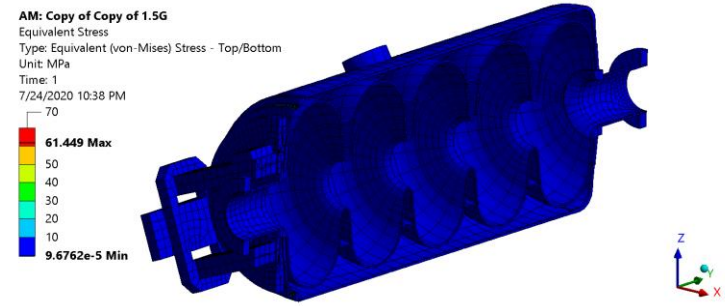


3G Bellows Stress

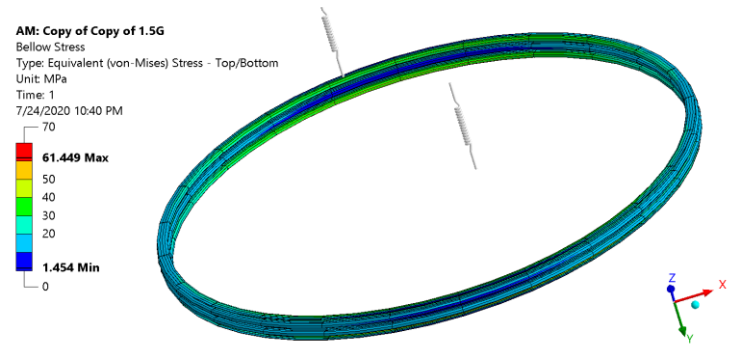


| | | Stress (MPa) | |
|---|---|---|---|
| | | Ti-Bellows | Niobium |
| **Allowable Stress** | | **99** | **25** |
| **Load** | 5G | 35 | 11 |
| | 3G | 62 | 13 |
| | 1.5G | 40 | 8 |

3G Niobium Stress

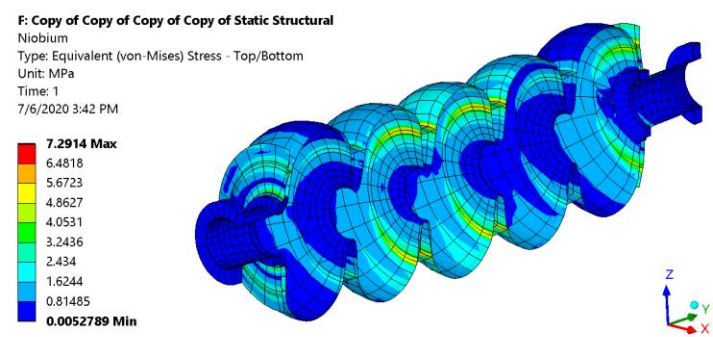

# B-90 Cavity: Bellows Displacement

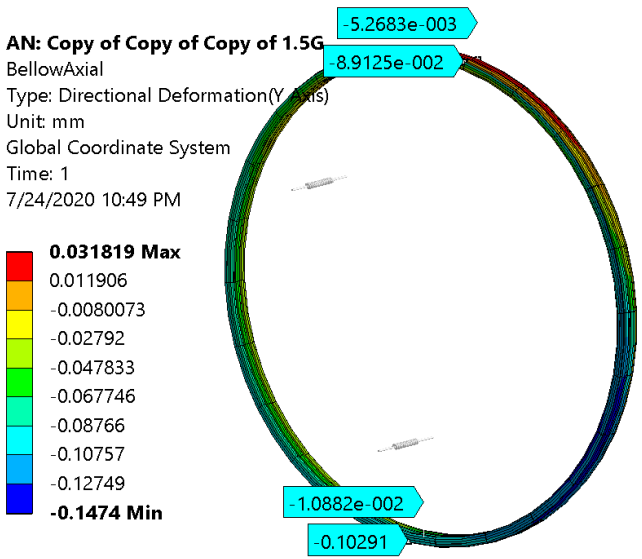


5G Axial Deformation
Abs Max: 0.17 mm

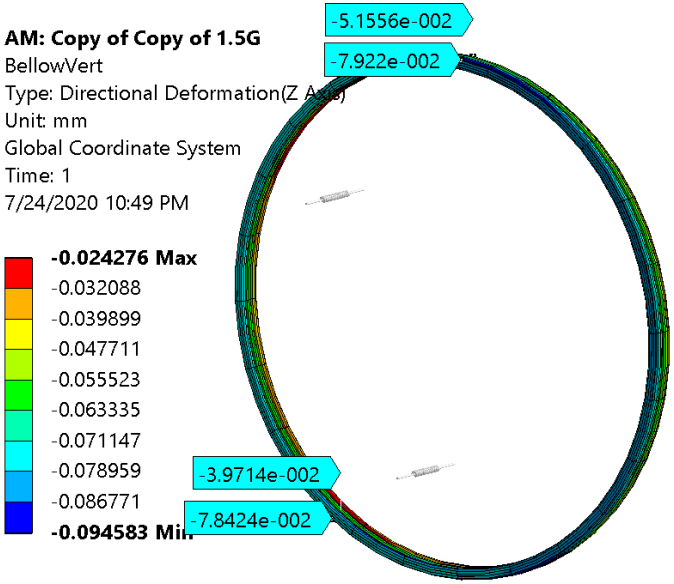


3G Vertical Deformation
Absolute max: 0.07 mm

# B-92 Cavity: Modal

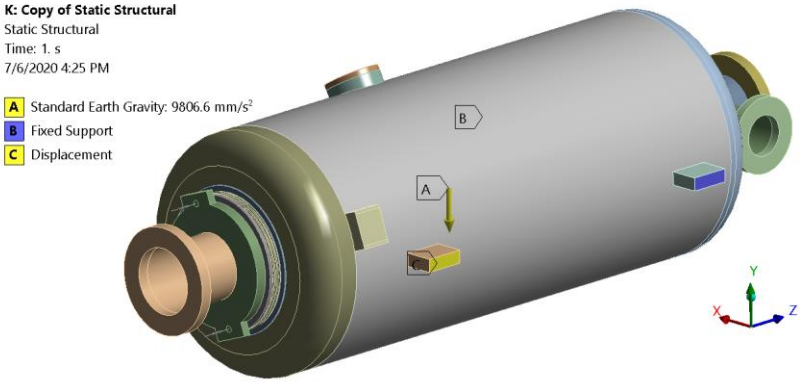


50 Hz

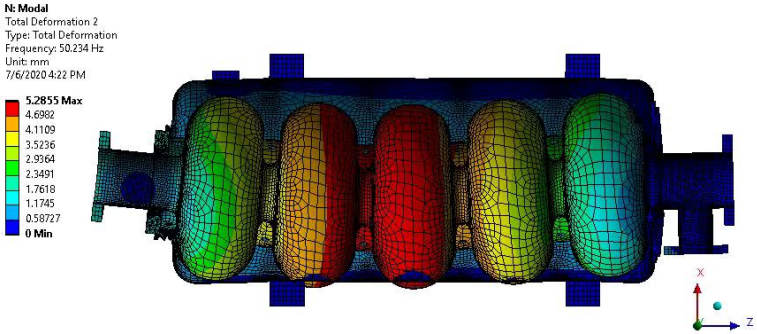


105 Hz

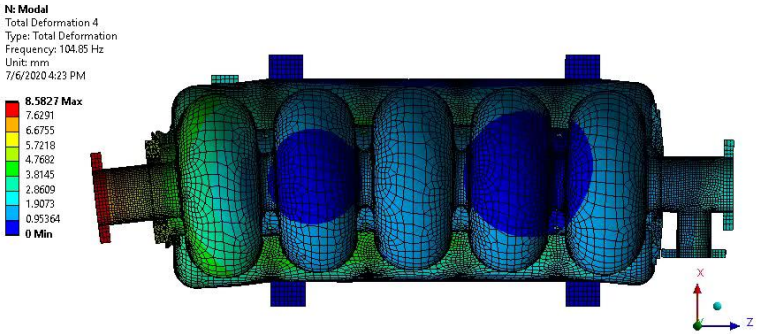


111 Hz

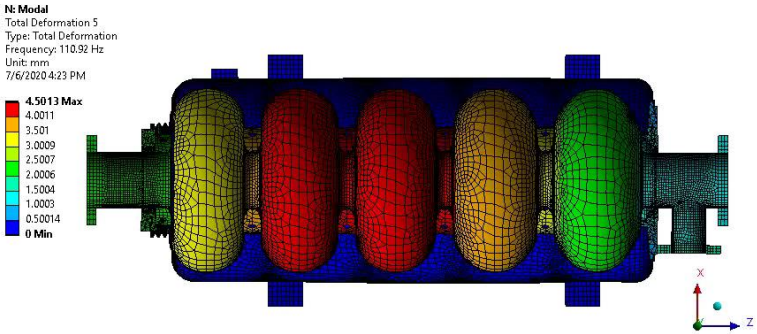


Results comparable to analysis by N. Sharma (Feb 2019 B92 Review)

# B-92 Cavity: 5G-3G-1.5G

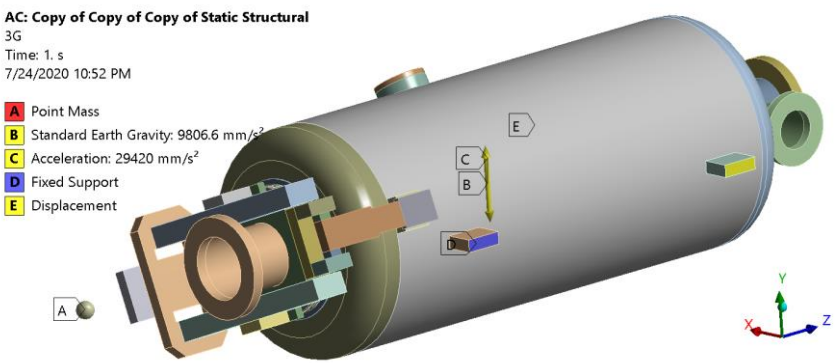


3G Stress

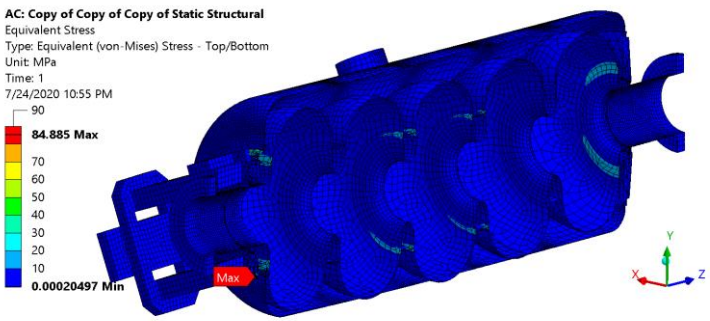


3G Bellows Stress

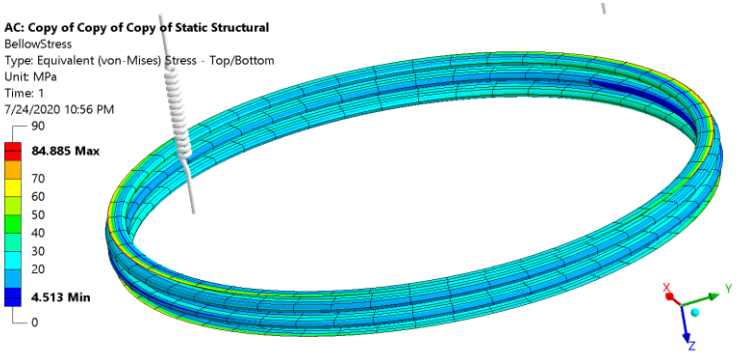


| | | Stress (MPa) | |
|---|---|---|---|
| | | Ti-Bellows | Niobium |
| **Allowable Stress** | | **99** | **25** |
| **Load** | 5G | 32 | 20 |
| | 3G | 85 | 27* |
| | 1.5G | 40 | 13 |

*sharp corner

3G Niobium Stress

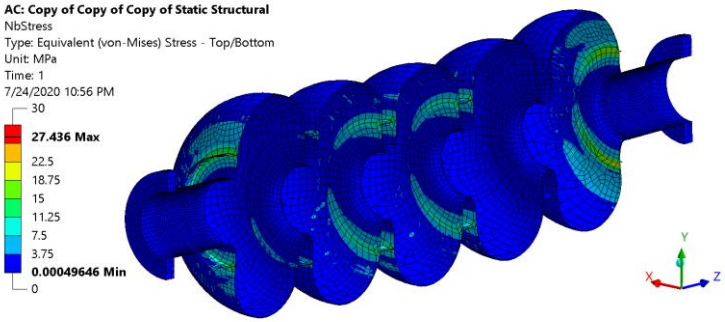

# B-92 Cavity: Bellows Deformation

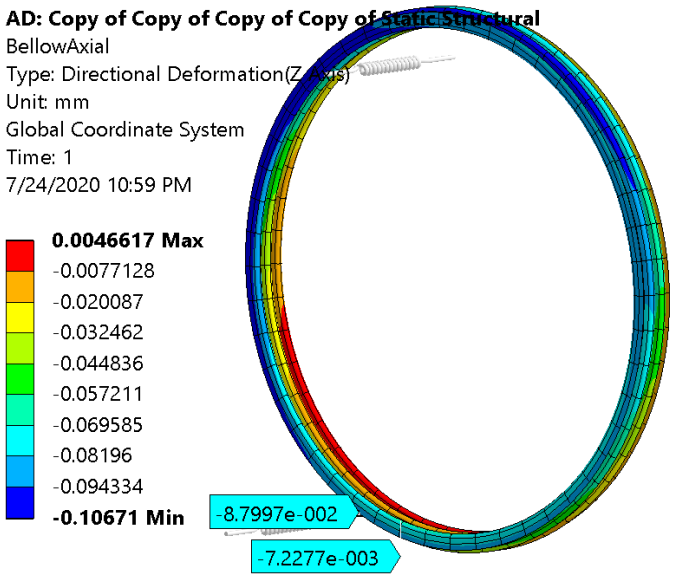


5G Axial Deformation
Absolute max: 0.11 mm

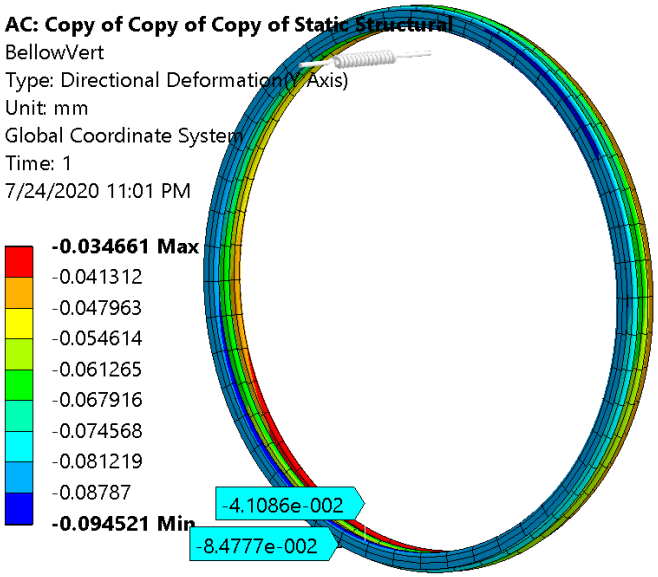


3G Vertical Deformation
Absolute max: 0.06 mm

# Two-Phase Pipe: Design Changes Since PDR

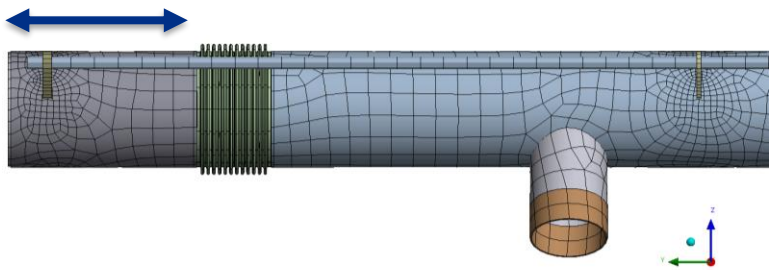

Previous

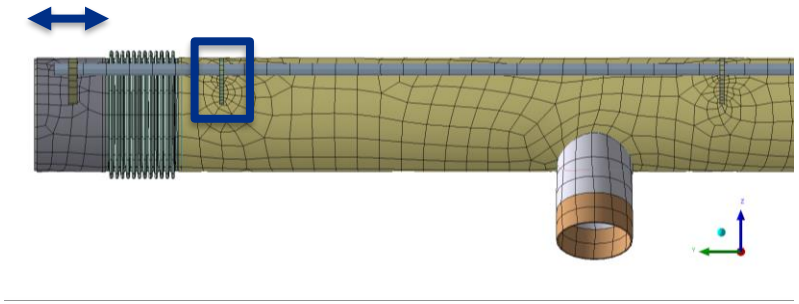

Current

Guide for G10 He Level Sensor

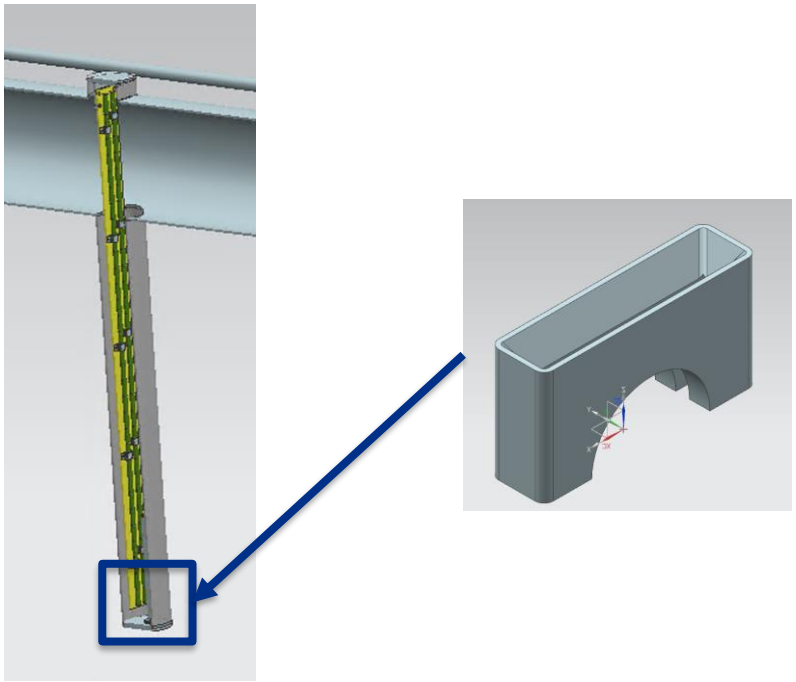

# Two-Phase Pipe: Modal

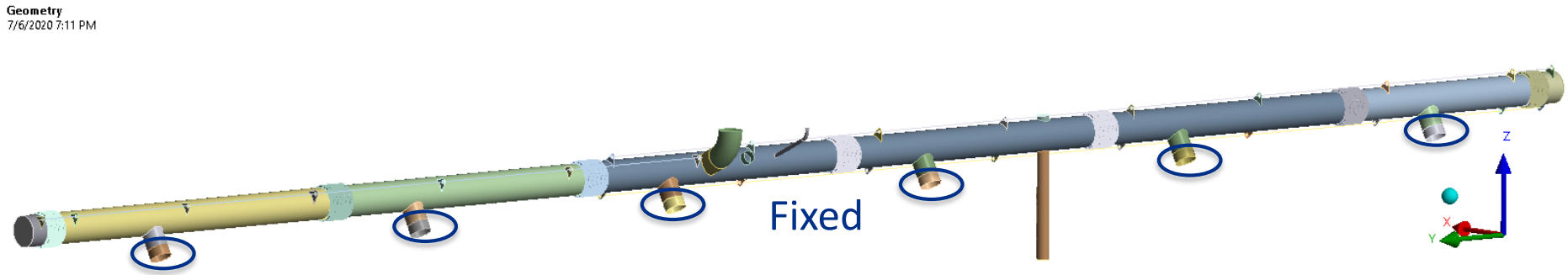


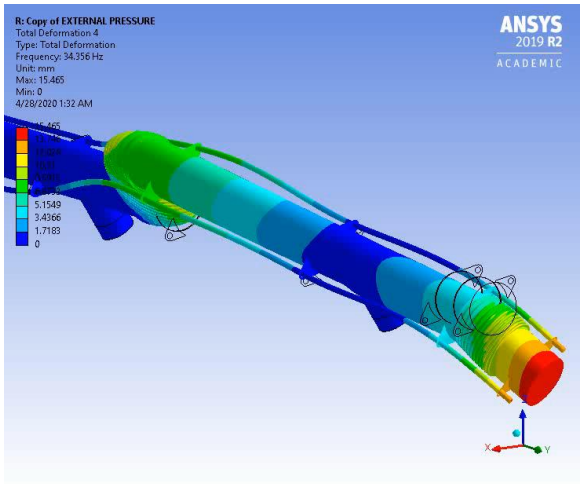


34.3 Hz

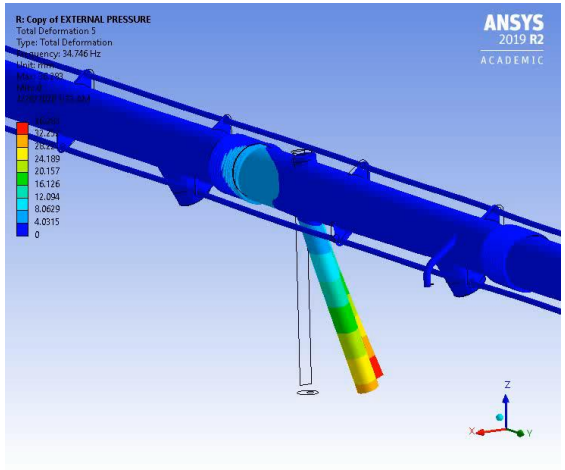


36.3 Hz

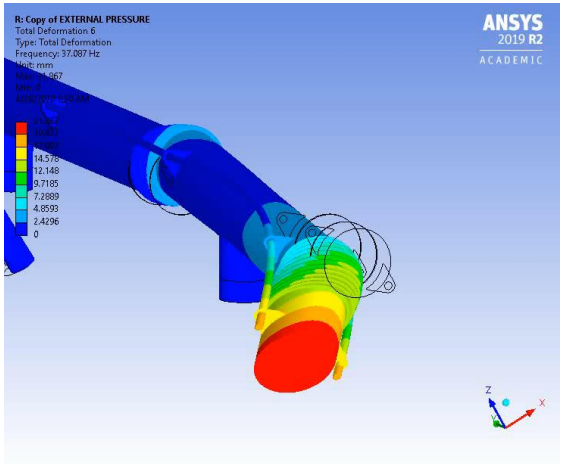


37.1 Hz

# Two-Phase Pipe: 3G

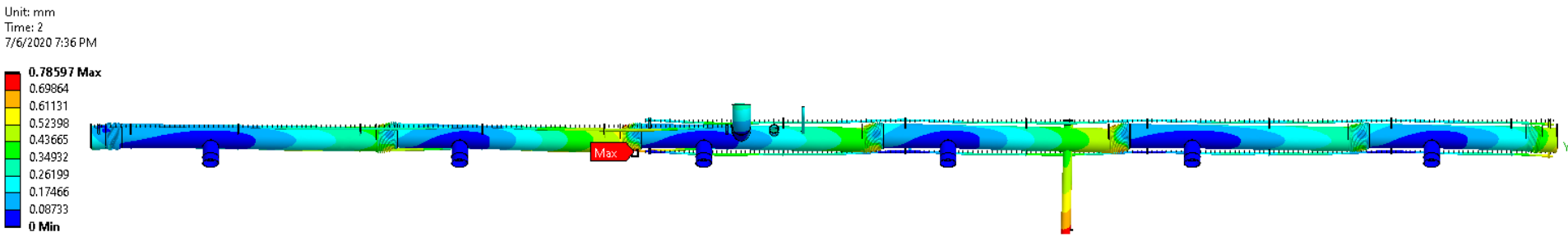


Total Def.

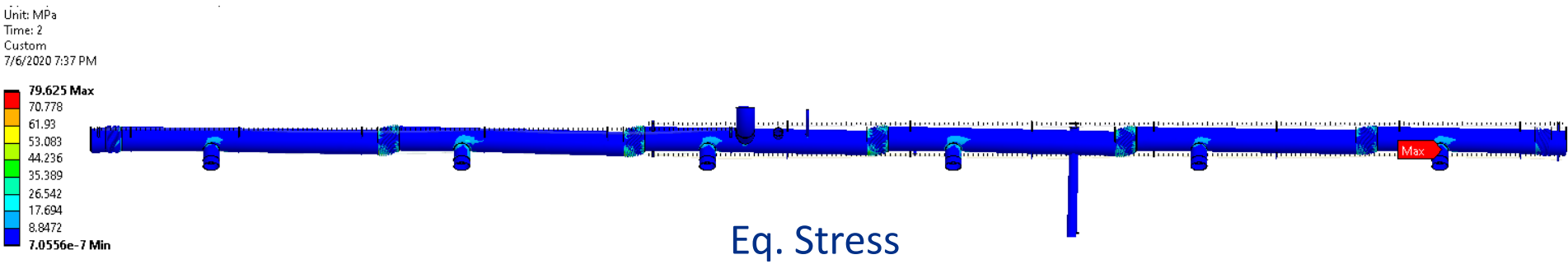


Eq. Stress

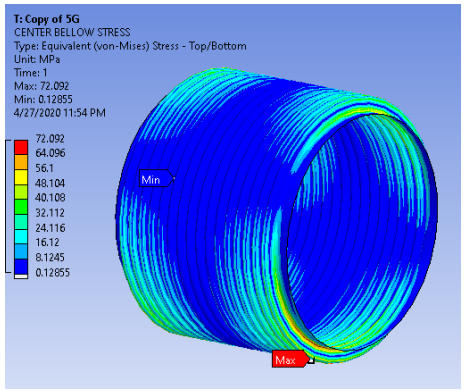


Stress- 72 MPa Max
SS316 Yield*0.8= 138 MPa

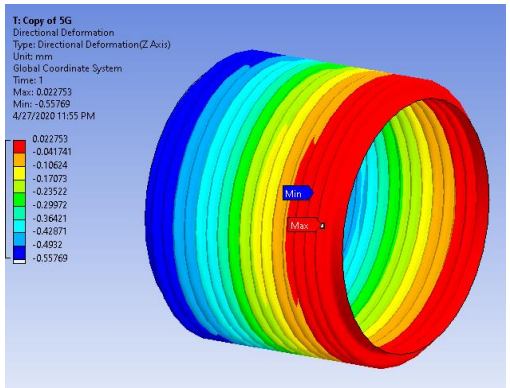


Vert Def: ΔMax=0.60mm
Spec: 2.0mm

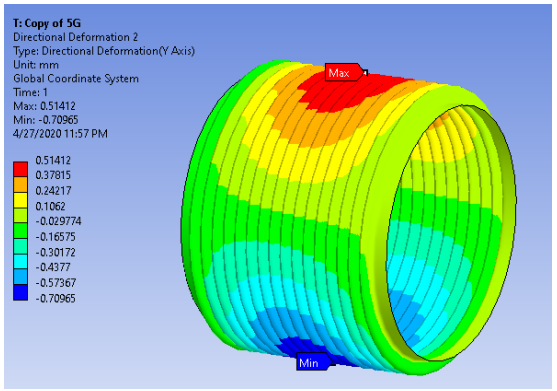


Axial Def: ΔMax=1.24mm
Spec: 6.5mm

# Two-Phase Pipe: 5G-3G-1.5G

| | | Component | | |
|---|---|---|---|---|
| | | **Most Stressed Bellow** | **Piping** | |
| **Max Stress (MPa)** | 5G | 72 | 43 | |
| | 3G | 78 | 80 | All <<138 MPa |
| | 1.5G | 43 | 41 | |
| **Max Trans Def (mm)** | 5G | 0.6 | N/A | |
| | 3G | 0.82 | | All <<2.0 mm |
| | 1.5G | 0.67 | | |
| **Max Axial Def (mm)** | 5G | 1.24 | N/A | |
| | 3G | 1.08 | | All <<6.0 mm |
| | 1.5G | 0.6 | | |

# C-Clamps – Changes Since PDR

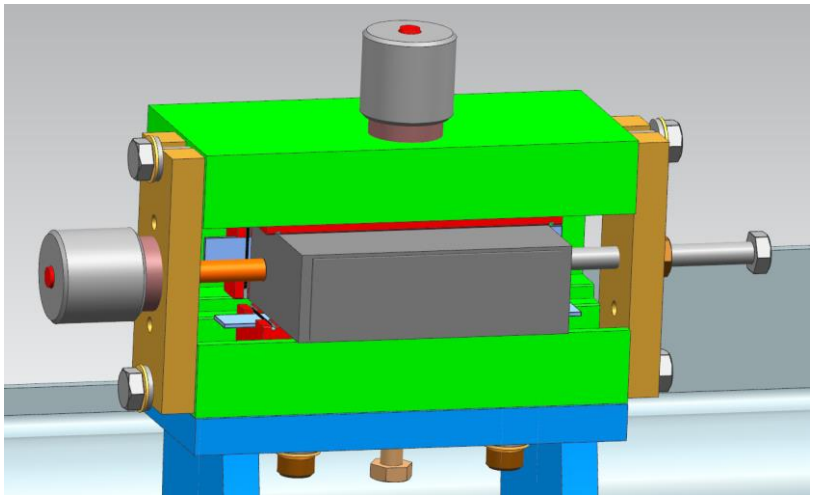

Previous

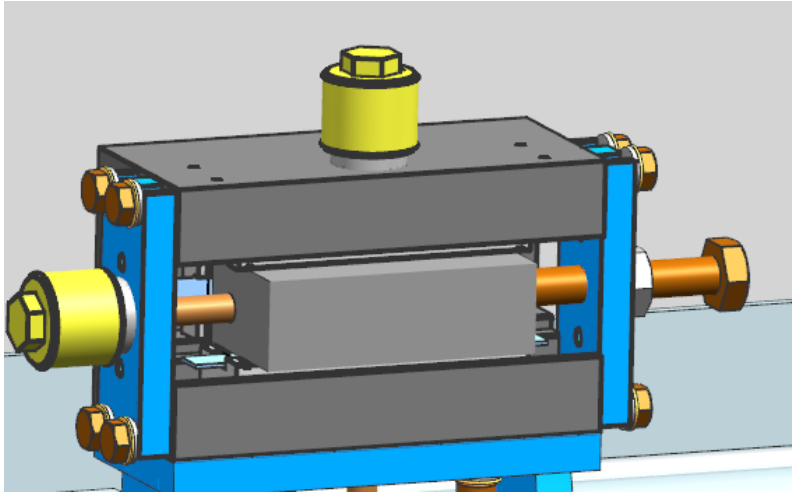

Current

Size of screws adjusted to prevent yielding in event one support takes majority of load from cavity mass

# C-Clamps: 1.5G load Case

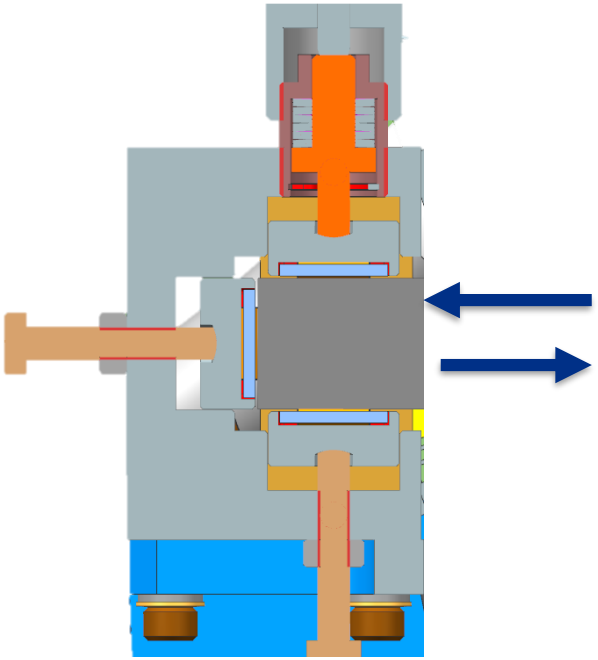

Section View

Hard contact at bearing

Only friction prevents motion
Hand calculation: sliding likely to occur

1.5G Acceleration Force

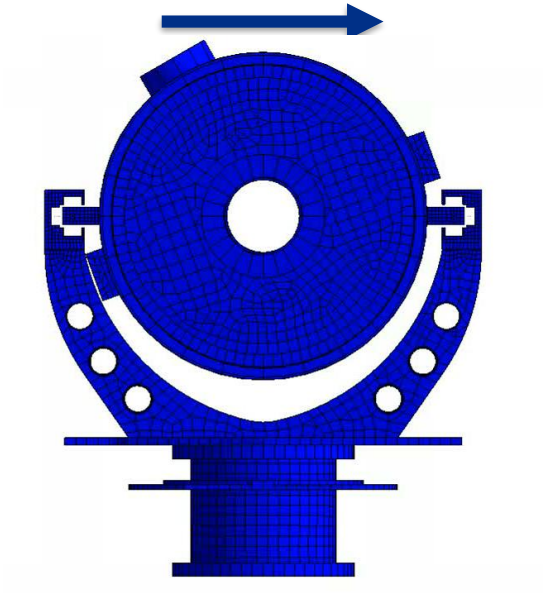

Dressed cavity with attached components: 300 Kg

# C-Clamps: 1.5G Load Case

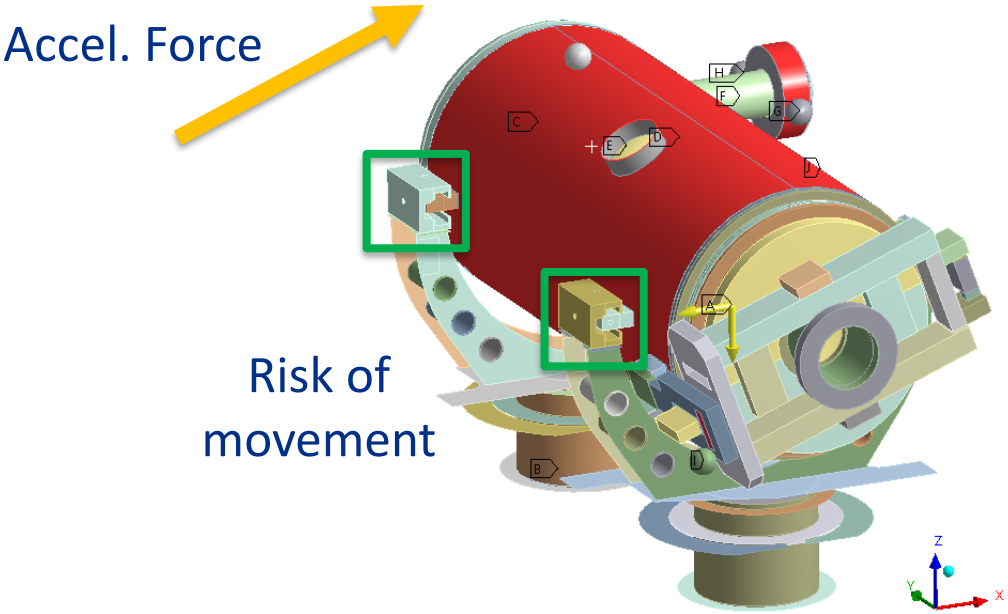


-Transverse alignment: +-0.25 mm

-Expected that cavity would return near original position, but this can not be guaranteed

# Sliding Estimation

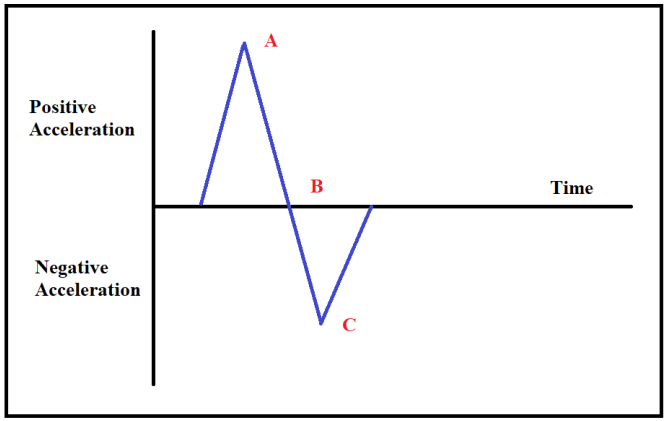


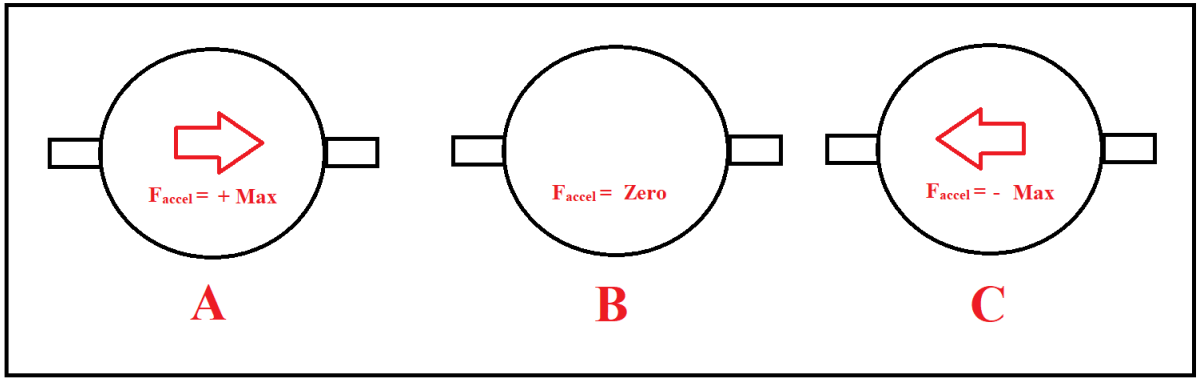


Potential case:

High (+) accel: slip

Lower (-) accel: gap stays open

Assume worst friction coeffs.

Find max gap

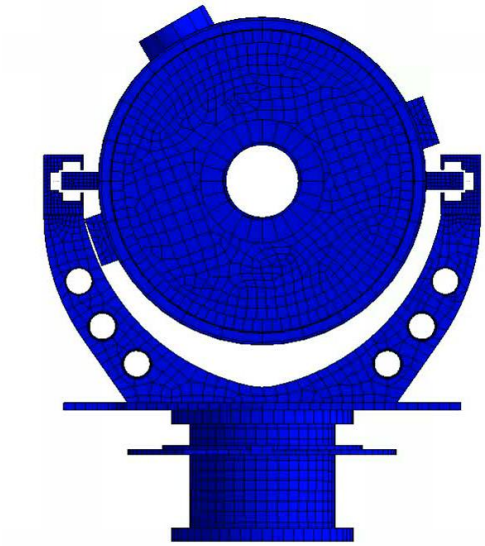

# Support Design and Results

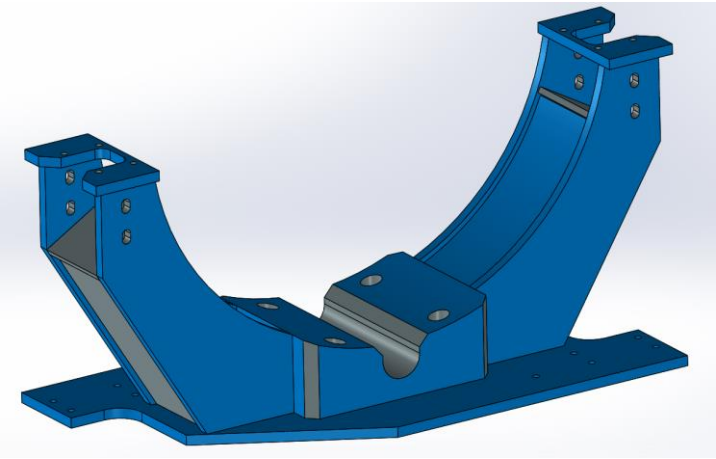

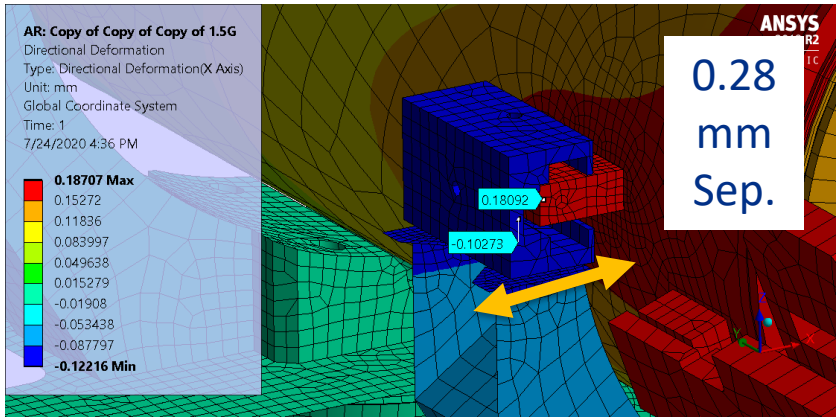


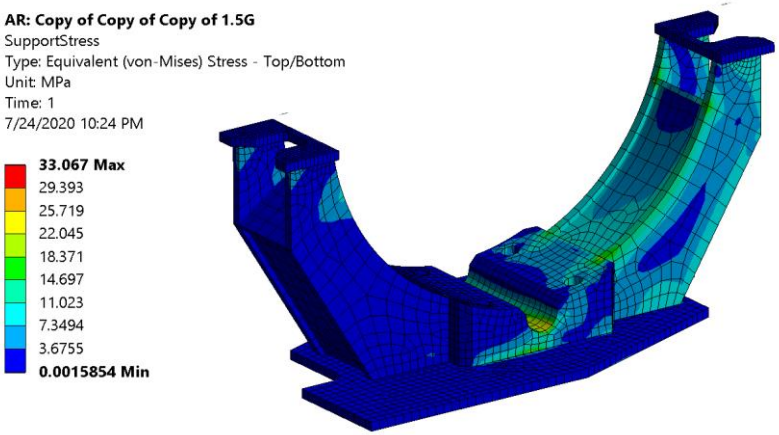


1.5G Stress

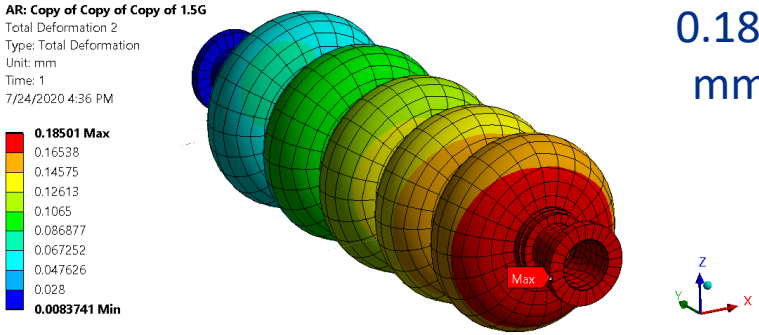


0.185 mm

Previous design allowed 0.41mm cavity movement

# Global Magnetic Shield: L-Channel Stiffener

Mu-Metal

Yield*0.8= 128 MPa

Modal- 22 Hz

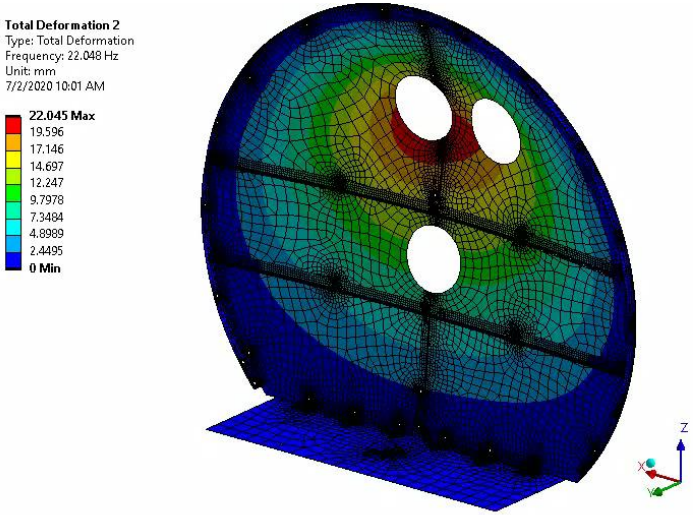


5G

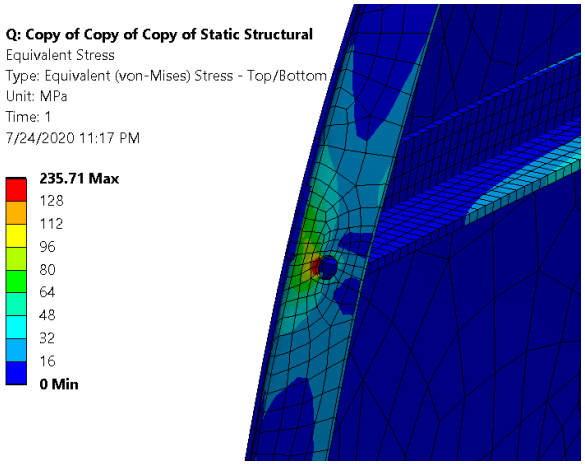


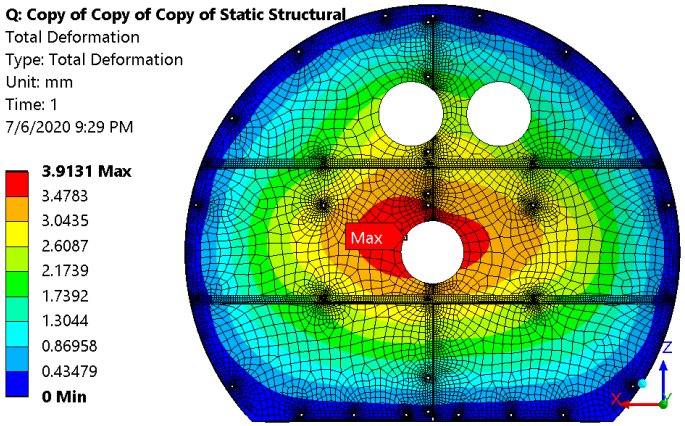

# Global Magnetic Shield- Side Port Modal

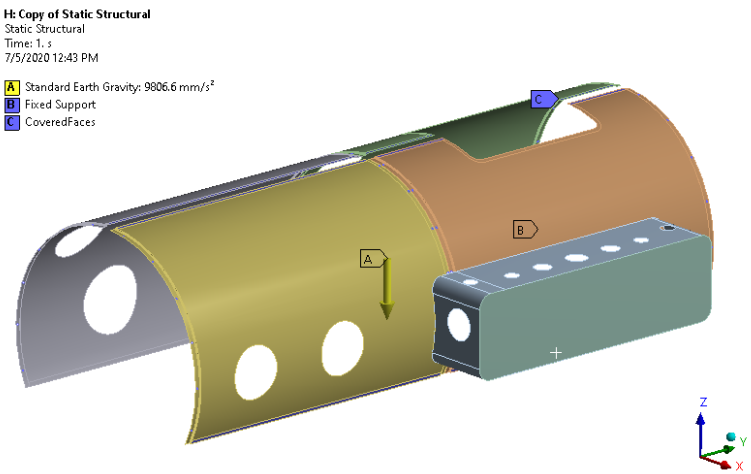


32 Hz

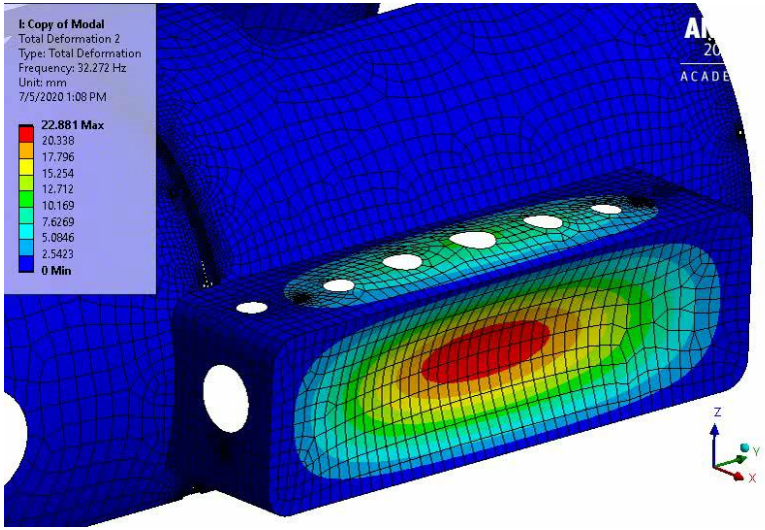

# Global Magnetic Shield- Side Port 3G

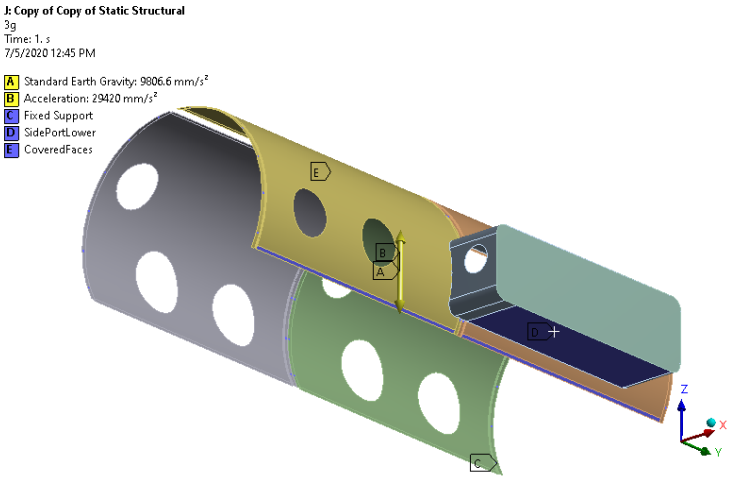


Total Def.

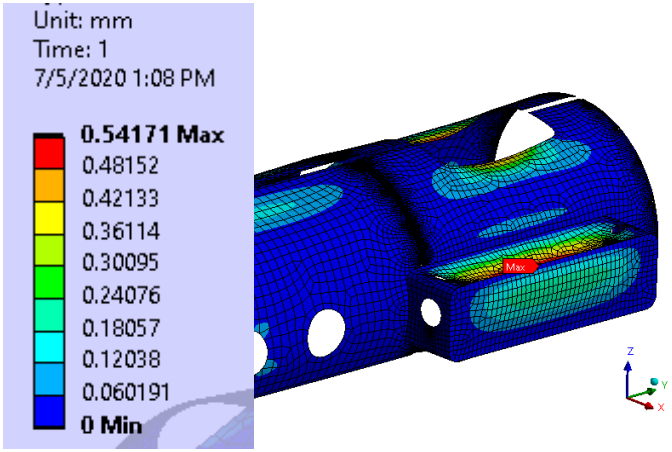


**3G**

Eq. Stress

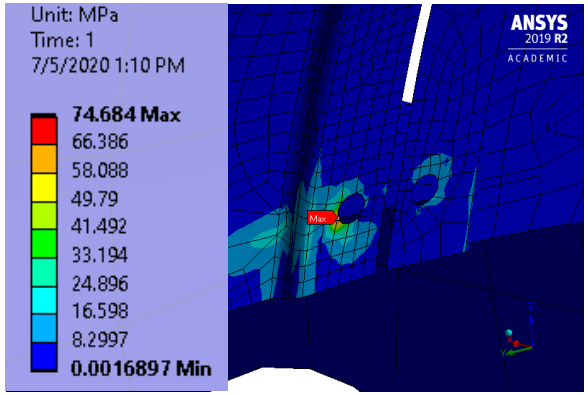


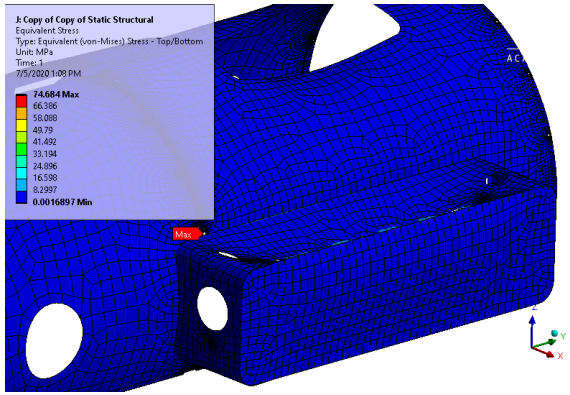

# Global Magnetic Shield- Side Port 5G - 1.5G

Total Def.

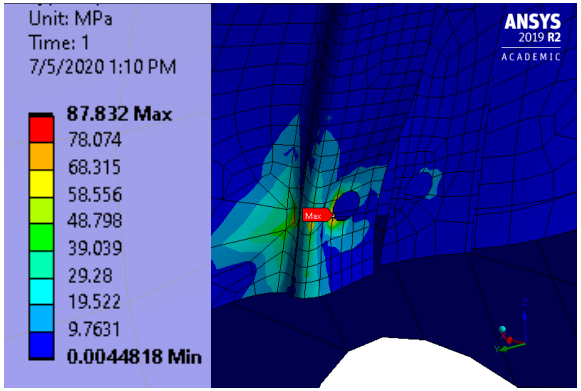


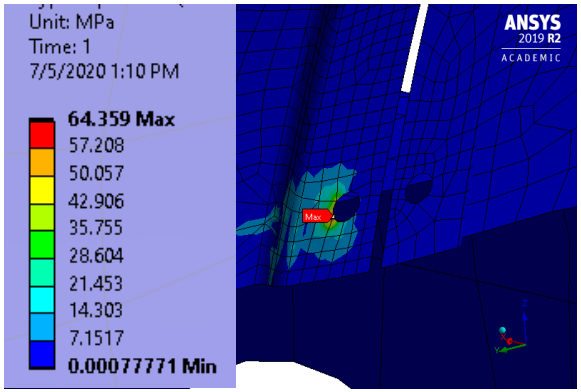


Eq. Stress

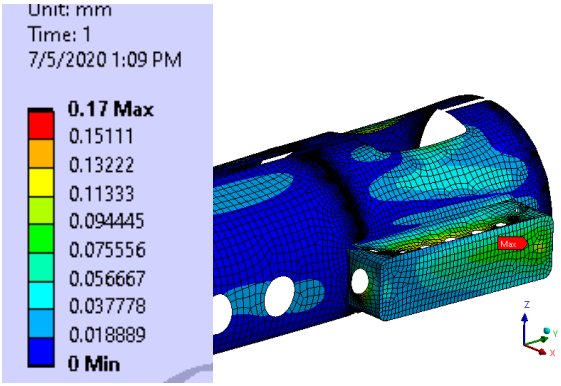


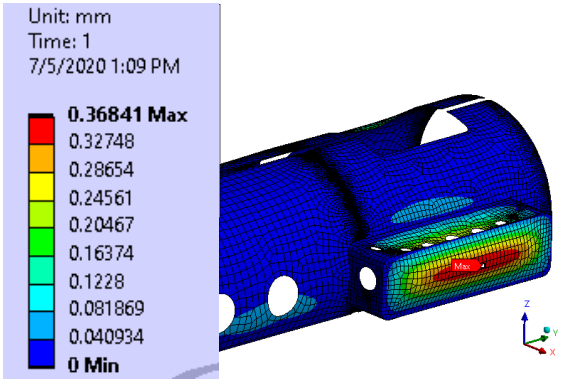


**5G** **1.5G**

# COUPLER VACUUM END

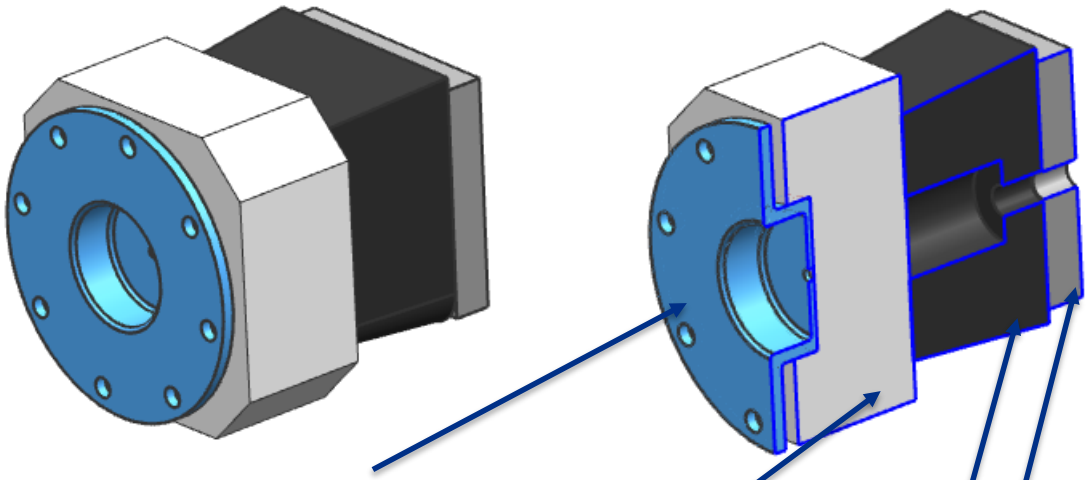

| | | |
|---|---|---|
| COVER | 6061-T6 ALUMINUM, ... | 0.9300 |
| TRANSPORT STABILIZER, ... | LOW DENSITY POLYETHYLENE FOAM, 1.7LB/FT3 | 0.0368 |
| MC SHIPPING BUMPER | | |
| MC SHIPPING FLANGE SHIM | HDPE | 0.2953 |

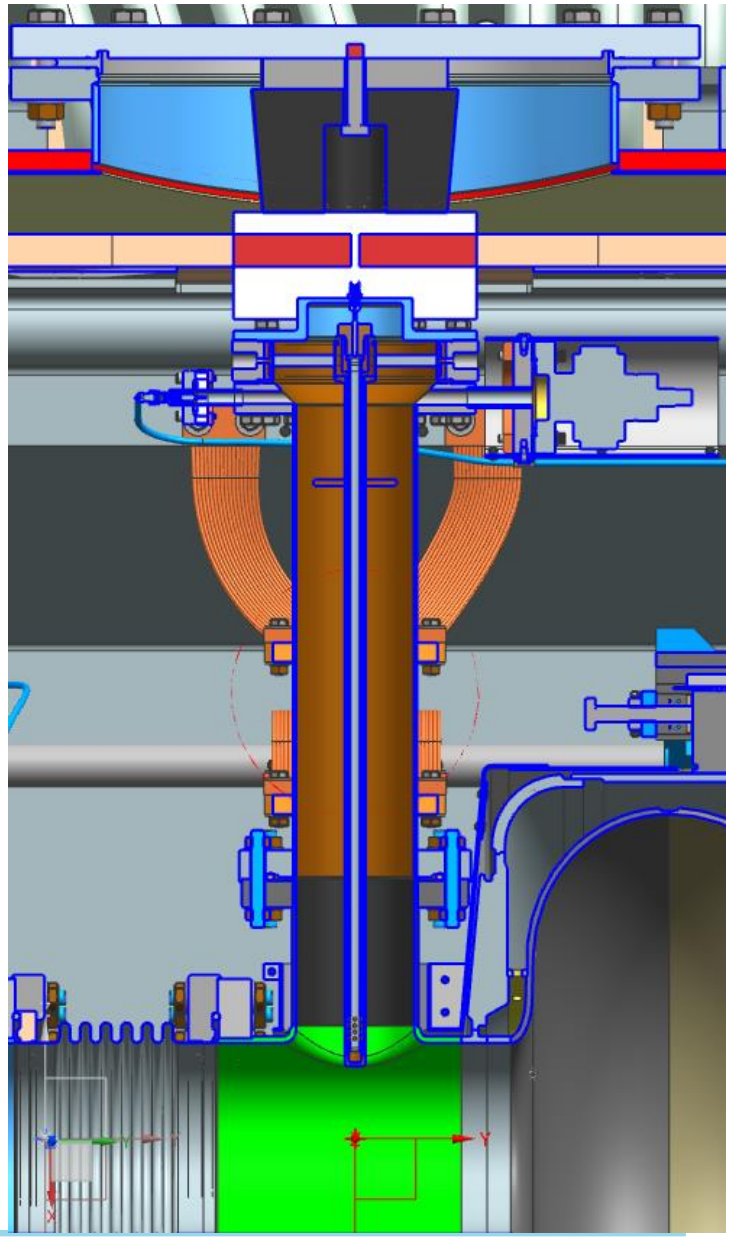

# COUPLER VACUUM END

A Standard Earth Gravity: 9.8066 m/s²
B Acceleration: 49. m/s²

5G

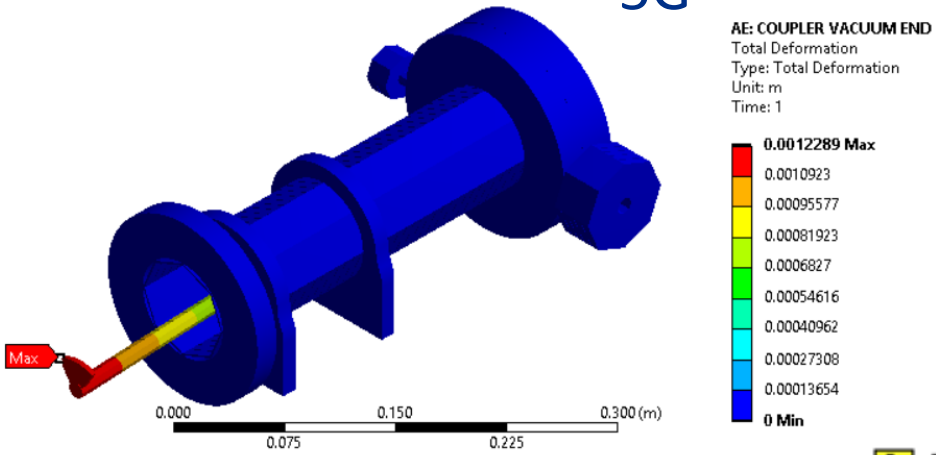


fixed

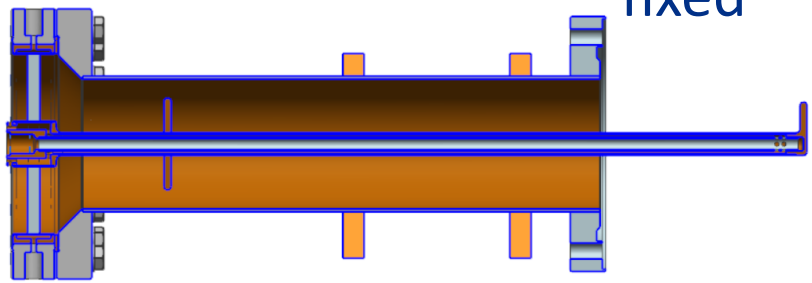

| | Mode | Frequency [Hz] |
|---|---|---|
| 1 | 1. | 37.481 |
| 2 | 2. | 37.489 |
| 3 | 3. | 116.84 |
| 4 | 4. | 119.14 |
| 5 | 5. | 220.96 |
| 6 | 6. | 223.52 |

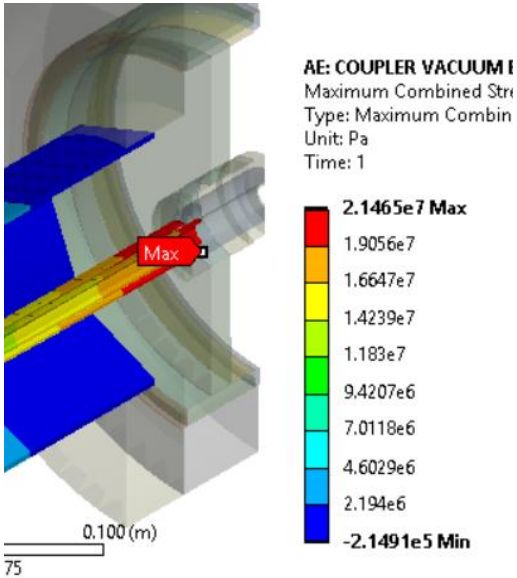


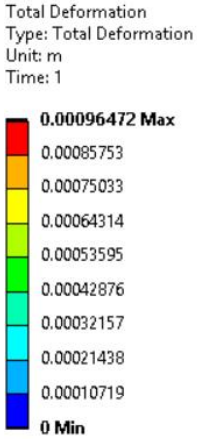


A Standard Earth Gravity: 9.8066 m/s²
B Acceleration: 29.4 m/s²

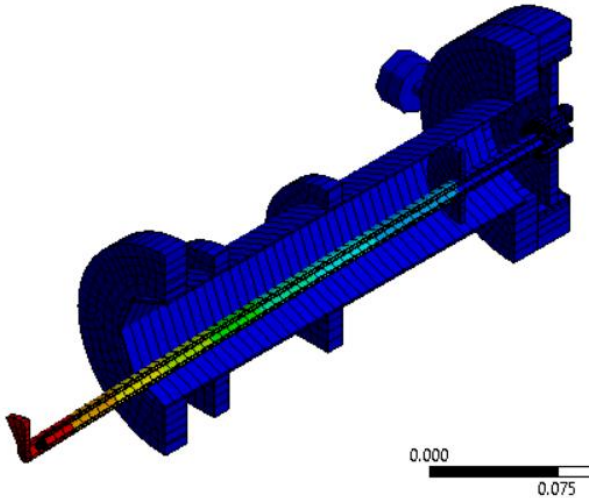


3G

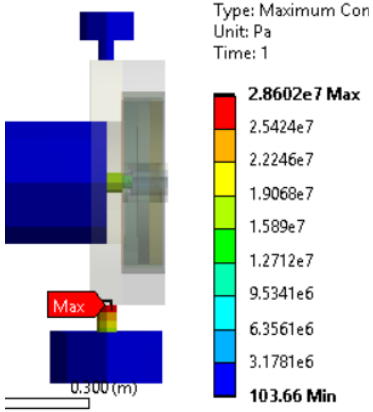

# CAVITY STRING

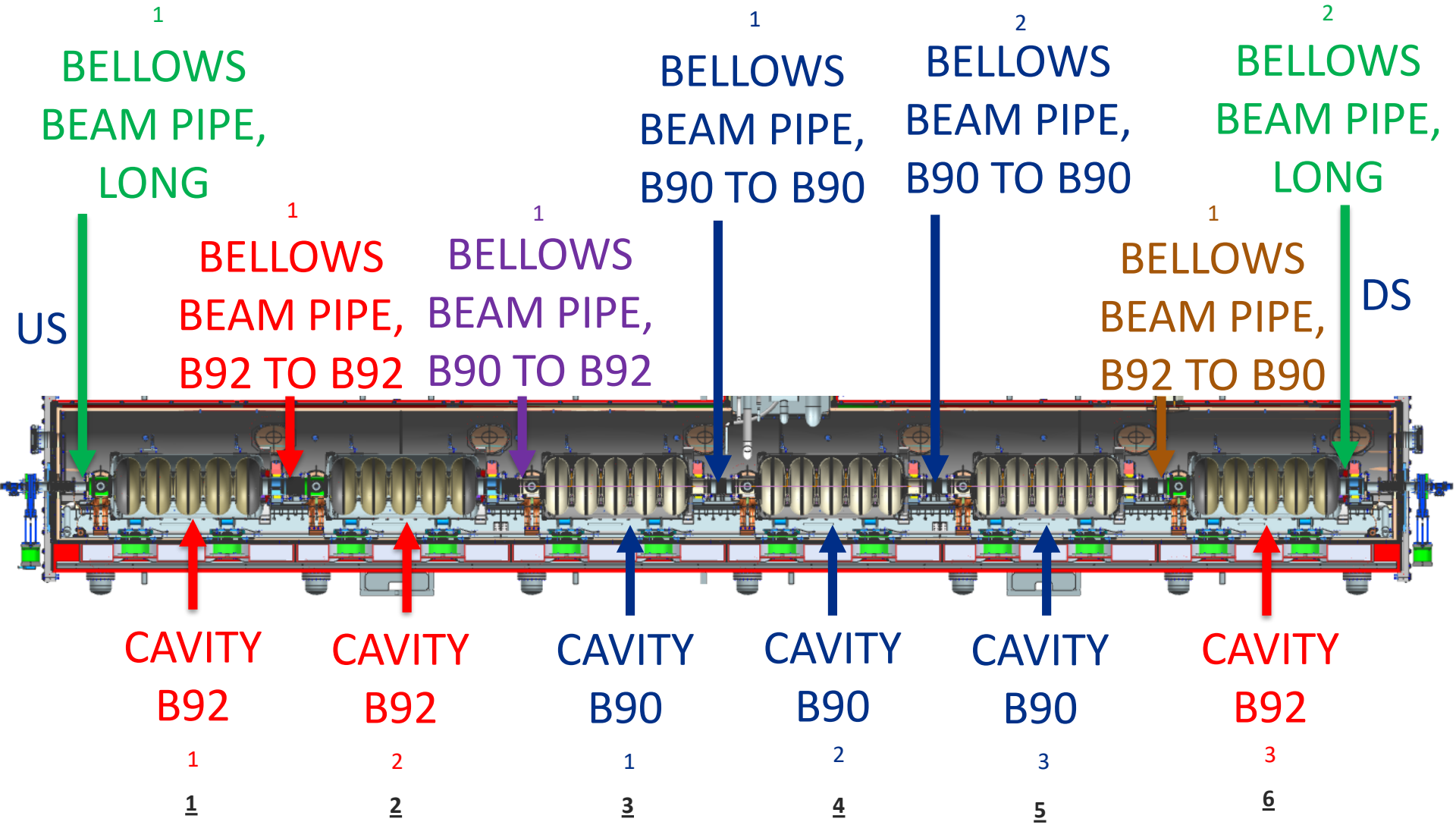

# CAVITY STRING 5G AXIAL

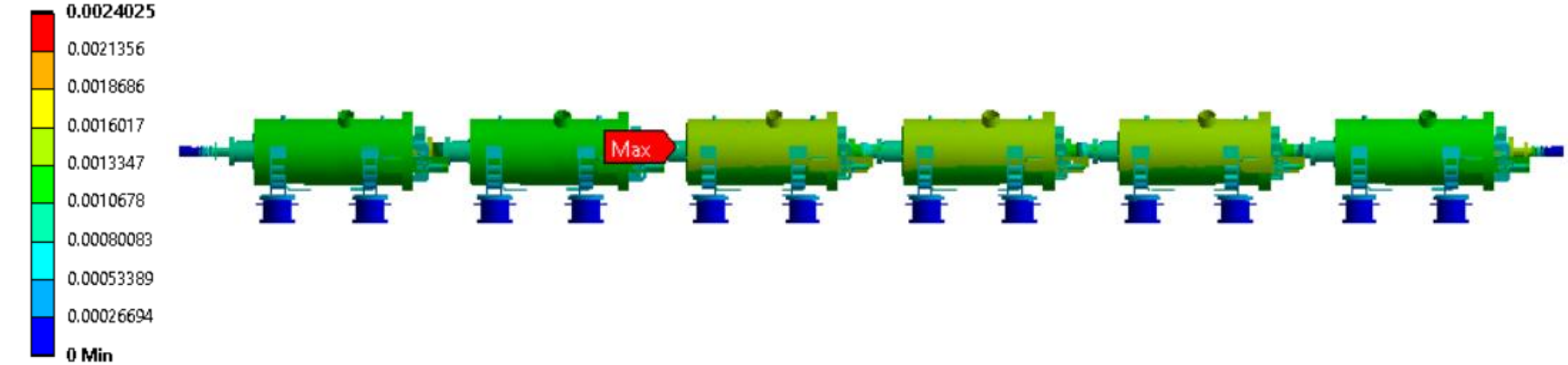


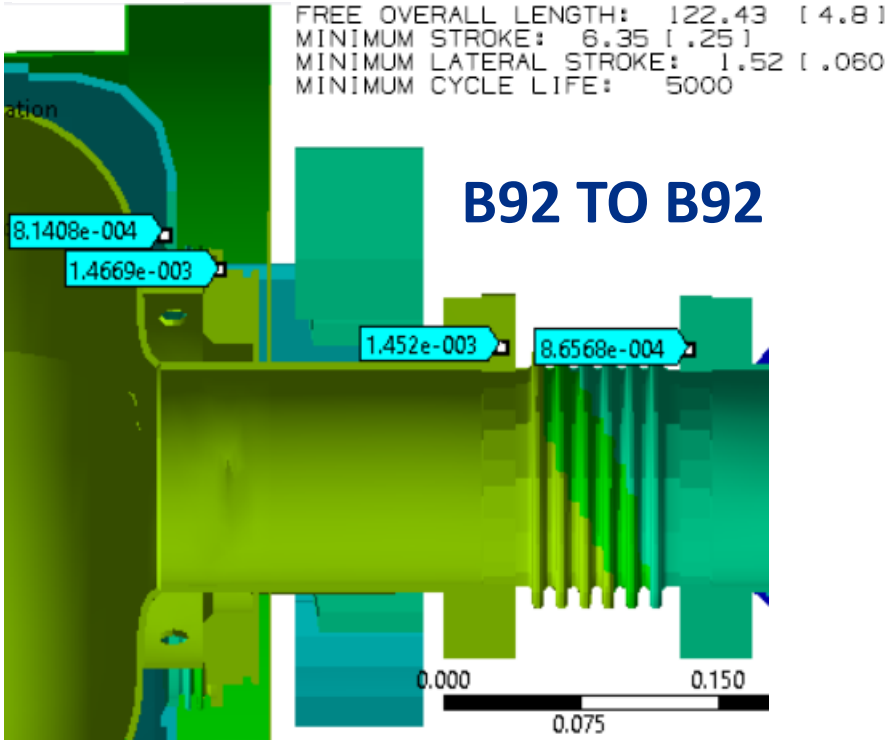


**B92 TO B92**

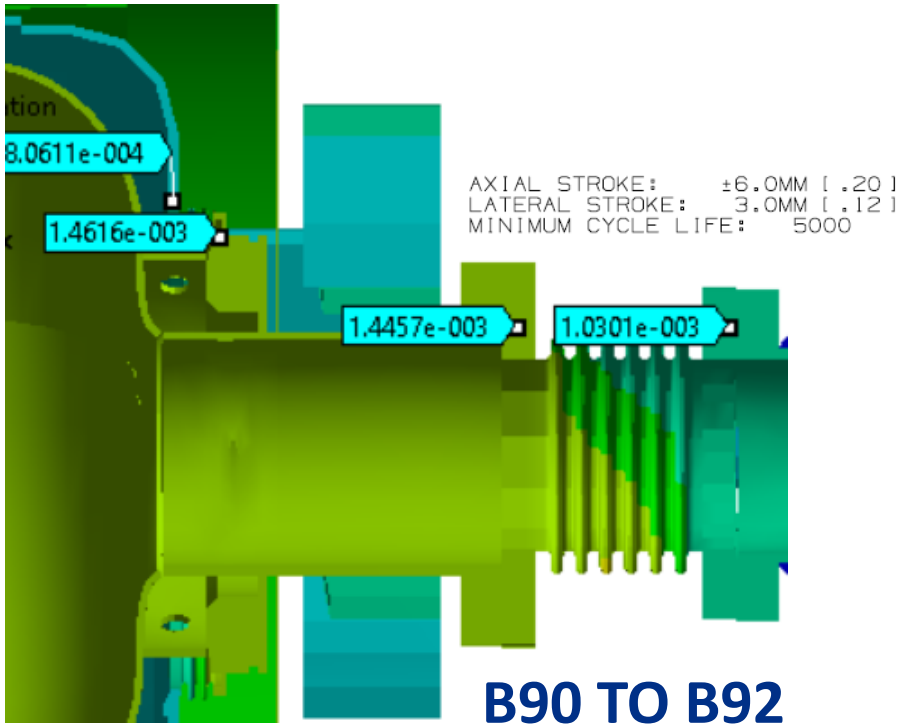


**B90 TO B92**

# CAVITY STRING 5G AXIAL

FREE OVERALL LENGTH: 152.4MM [6.0]
MINIMUM STROKE: ±12MM [.472]
MINIMUM LATERAL STROKE: 8MM [.315]
MINIMUM CYCLE LIFE: 5000

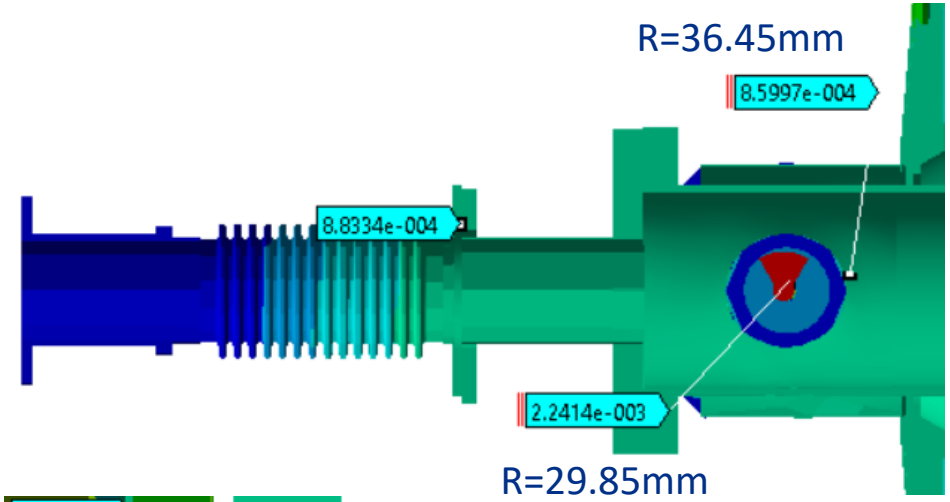


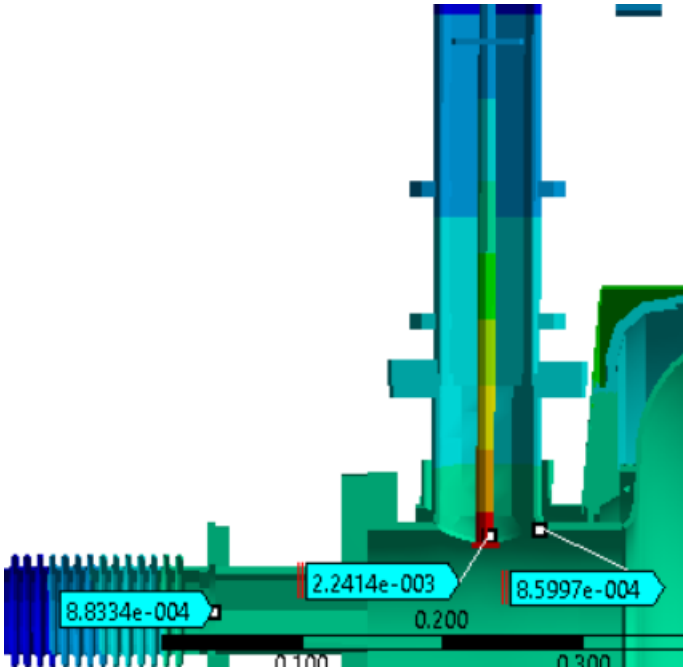


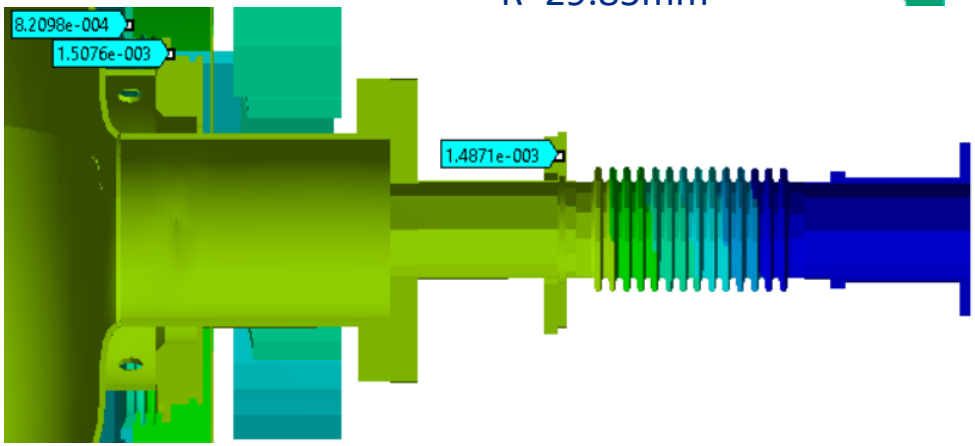


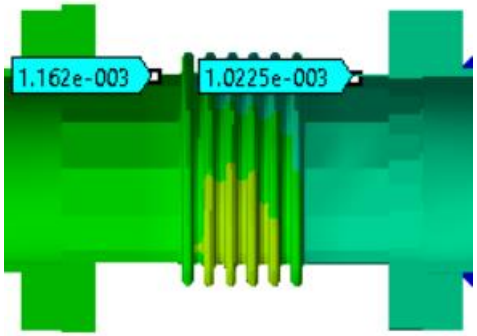


AXIAL STROKE: ±6.0MM [.20]
LATERAL STROKE: 3.0MM [.12]
MINIMUM CYCLE LIFE: 5000

## BELLOWS, BEAM PIPE, LONG

## B90 TO B90

# CEA STRONG BACK

| Name | Weight (kg) | Number |
|---|---|---|
| | | |
| **CEA STRONG BACK_20200618** | **803.7048** | **F10141055** |

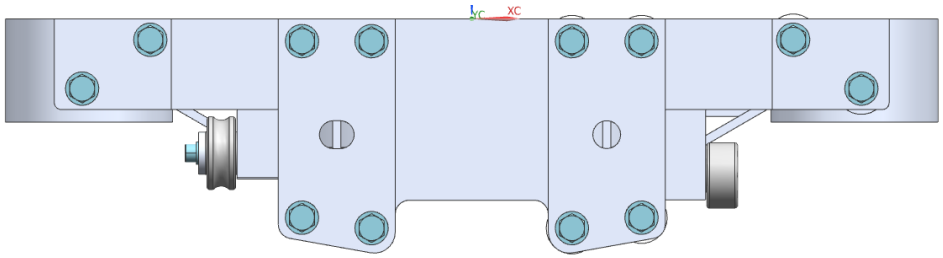

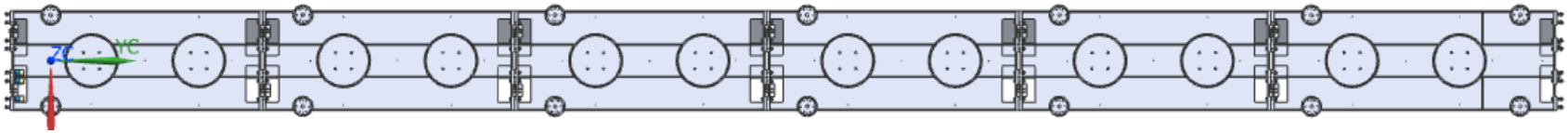

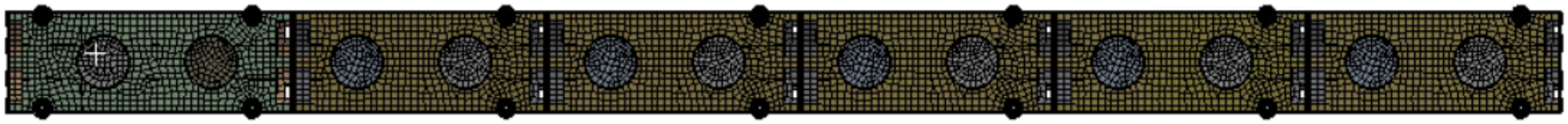

| | |
|---|---|
| Mass | 837.26 kg |

# SUPPORT STRONG BACK

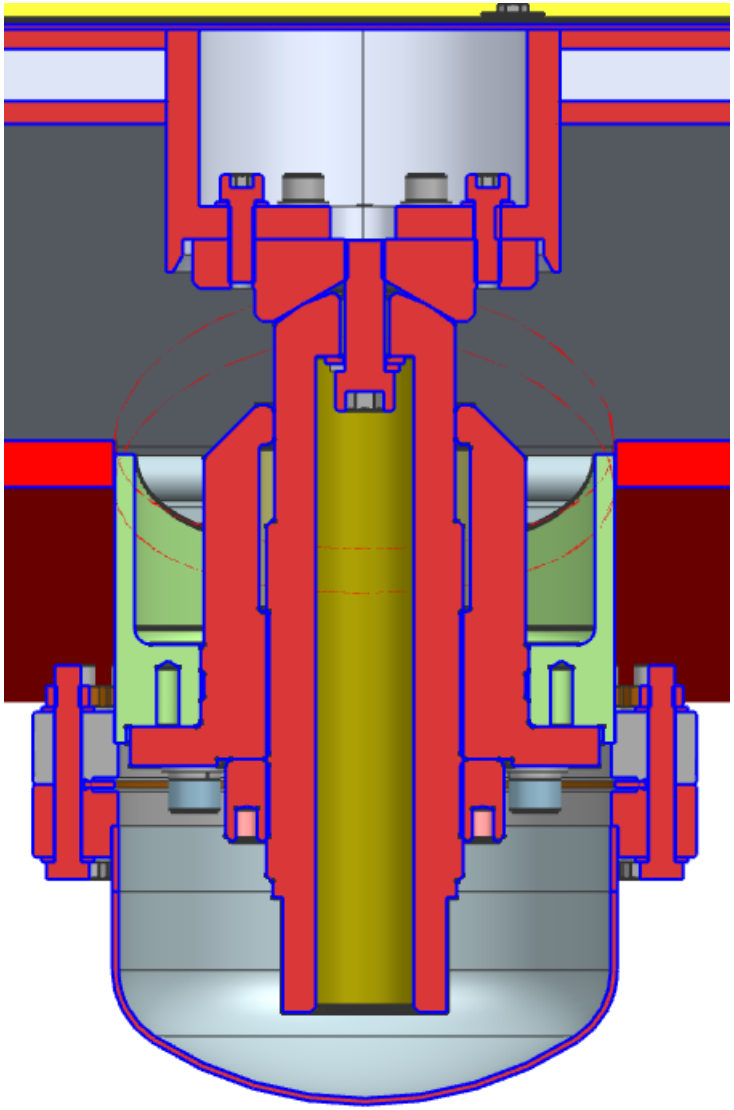

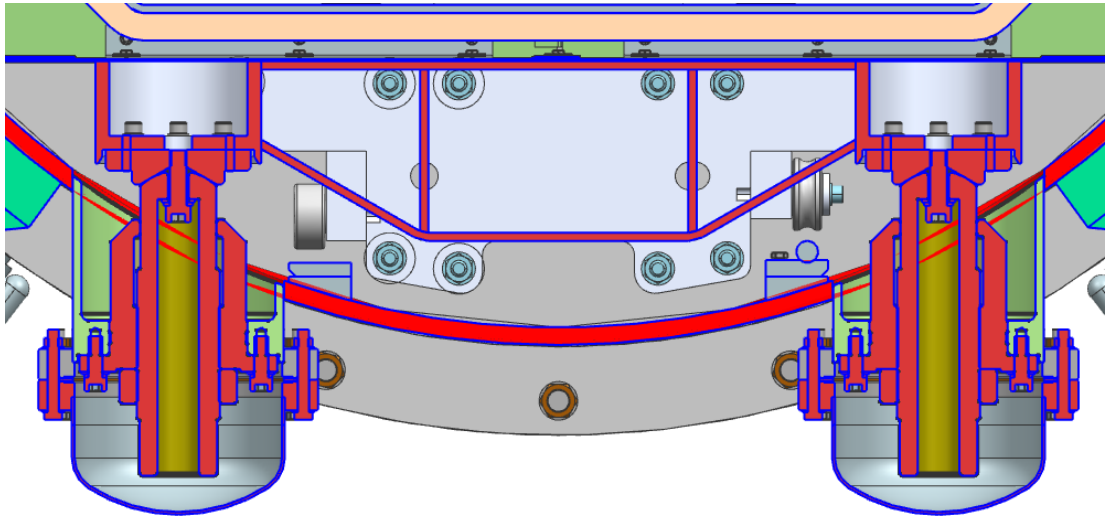

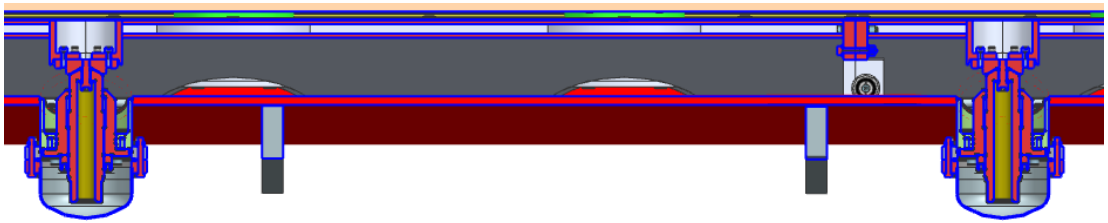

# SUPPORT STRONG BACK

NO ROTATION

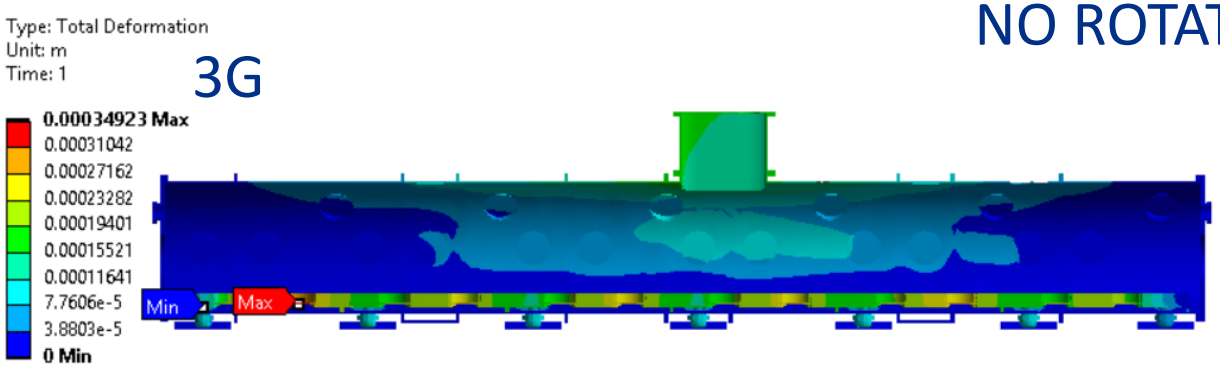


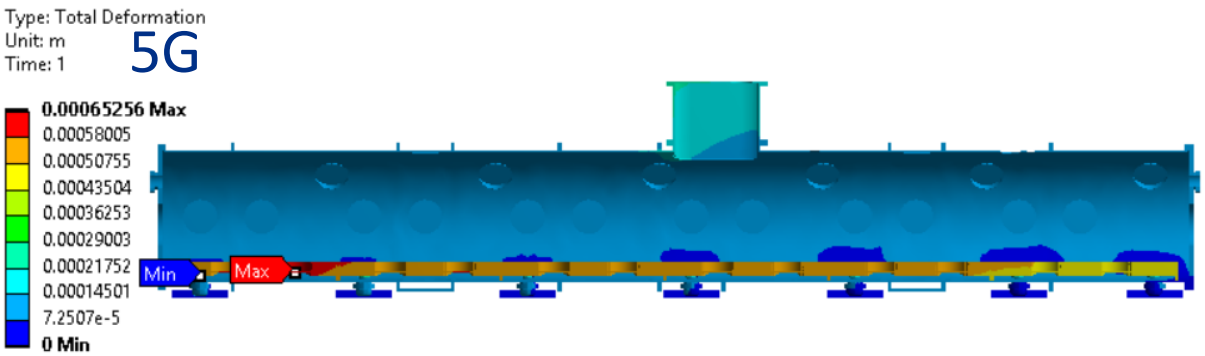


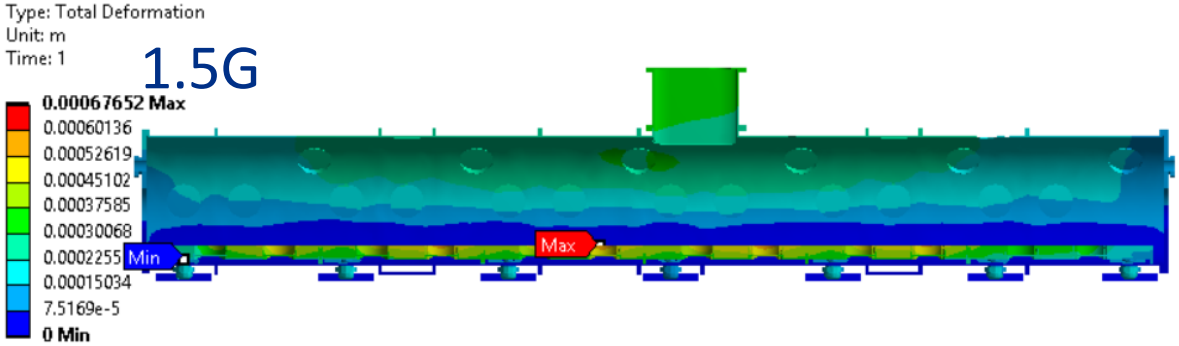


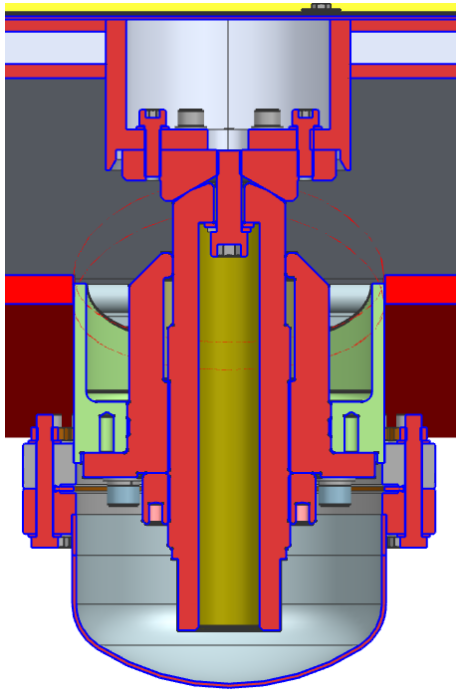

| | Mode | Frequency [Hz] |
|---|---|---|
| 1 | 1. | 20.863 |
| 2 | 2. | 38.079 |
| 3 | 3. | 49.077 |
| 4 | 4. | 50.365 |
| 5 | 5. | 59.054 |
| 6 | 6. | 62.334 |

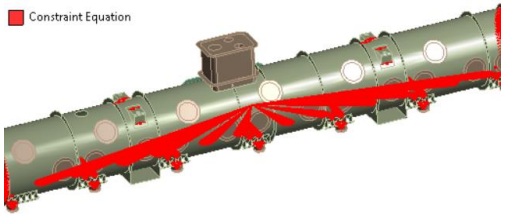

# 5K LINE

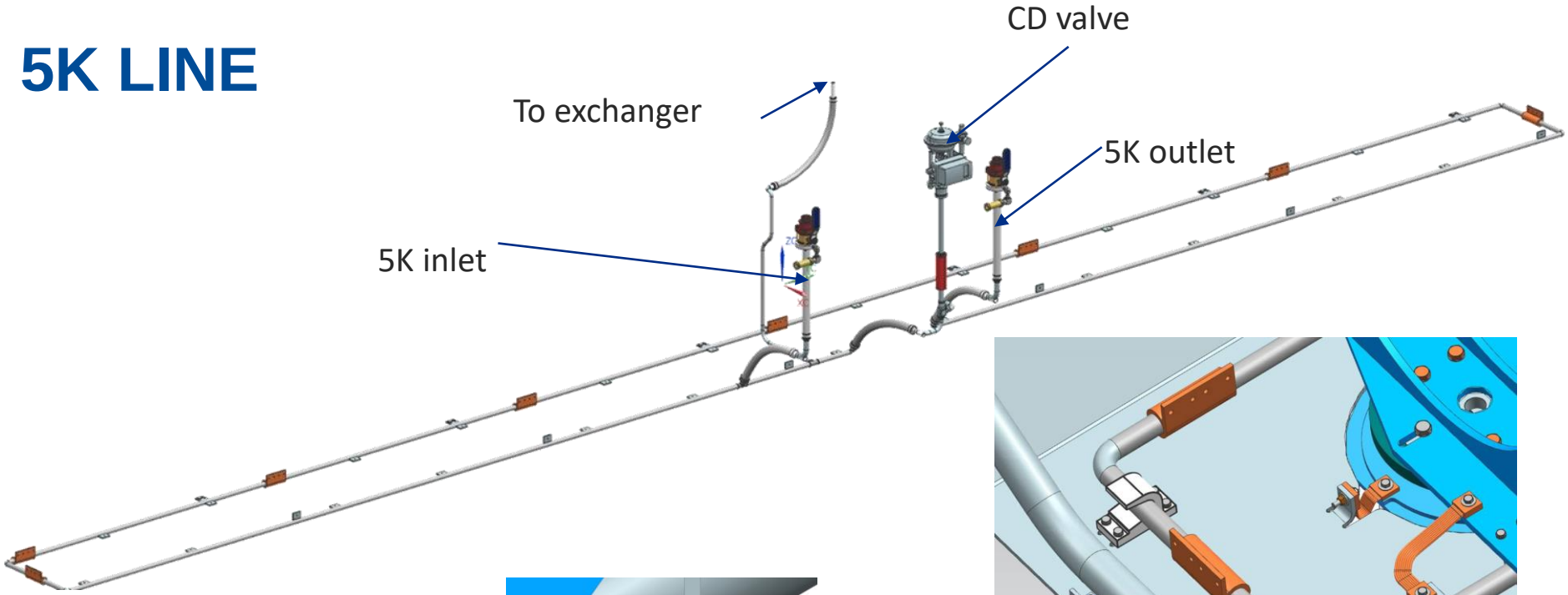


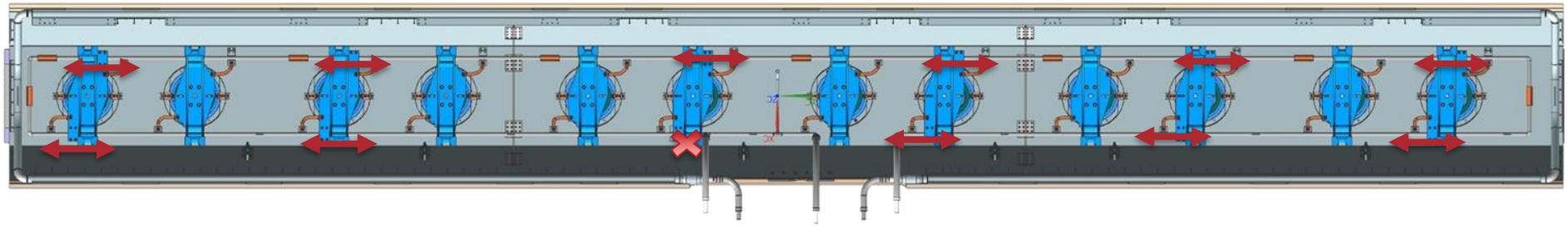

# 5K LINE

| | Mode | Frequency [Hz] |
|---|---|---|
| 1 | 1. | 21.051 |
| 2 | 2. | 21.073 |
| 3 | 3. | 31.048 |
| 4 | 4. | 31.056 |
| 5 | 5. | 40.409 |
| 6 | 6. | 40.521 |

## 5G

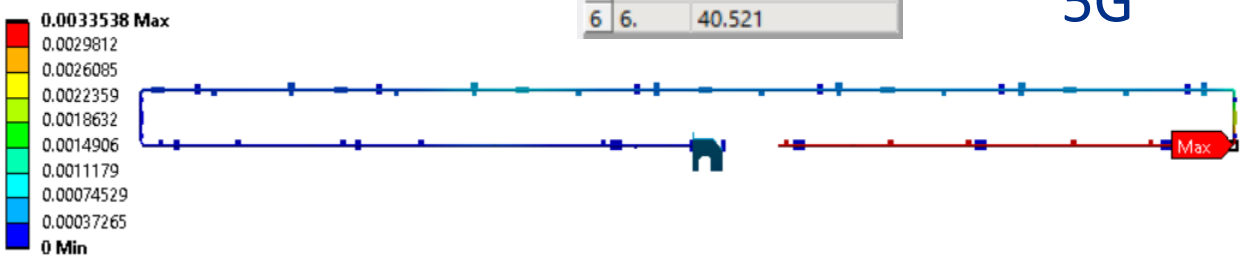


Type: Maximum Combined Stress
Unit: Pa
Time: 1

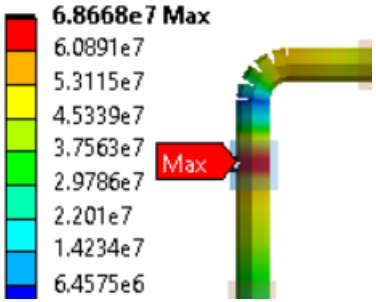


## 3G

Type: Total Deformation
Unit: m
Time: 1

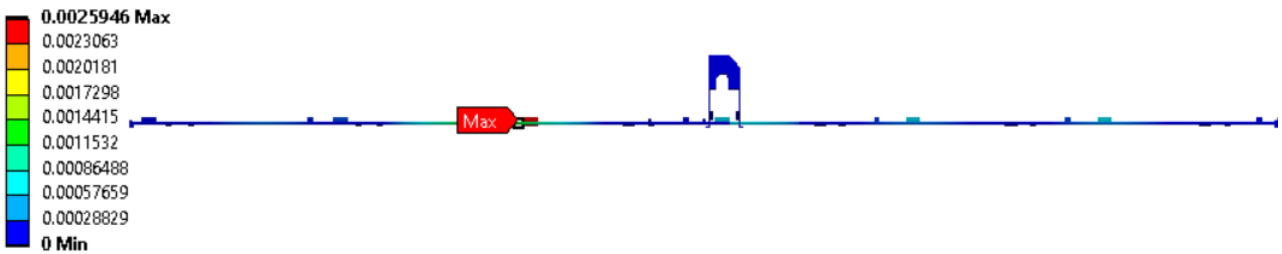


Type: Maximum Combined Stress
Unit: Pa
Time: 1

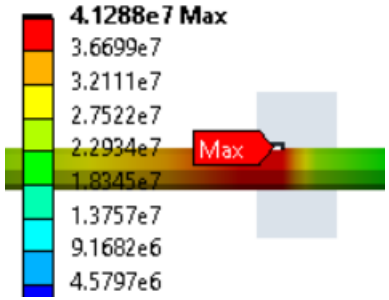


## 1.5G

Type: Total Deformation
Unit: m
Time: 1

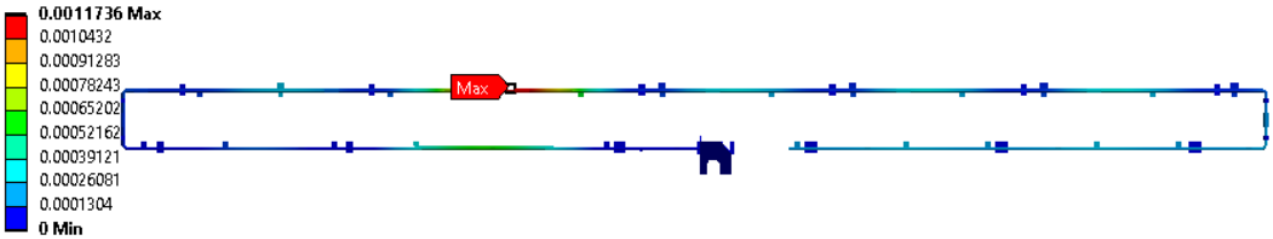


Type: Maximum Combined Stress -
Unit: Pa
Time: 1

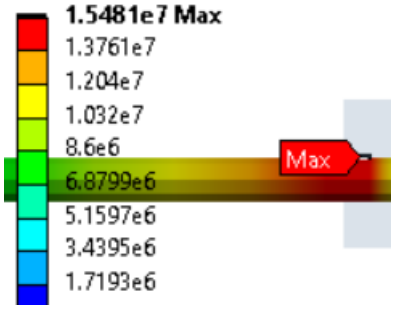

# 2K LINE

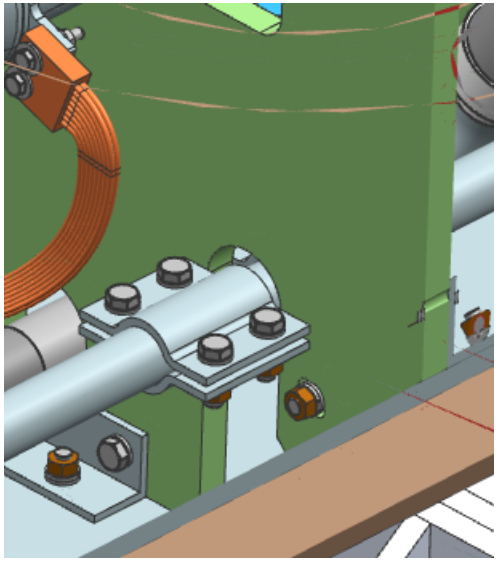

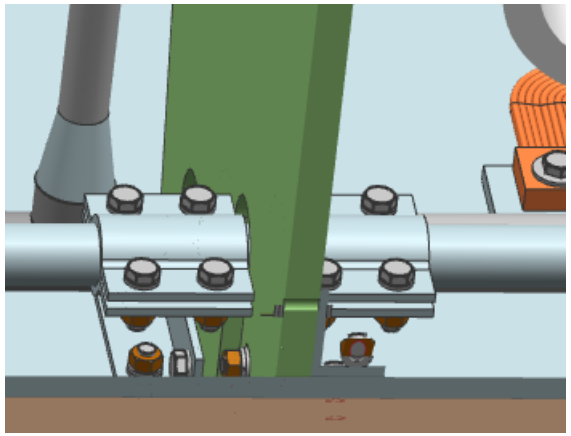

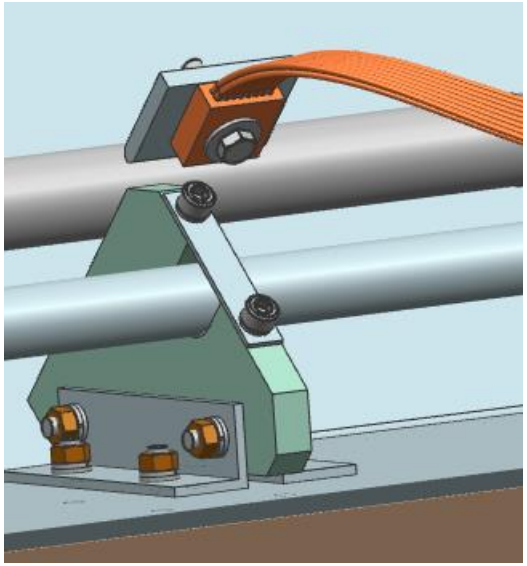

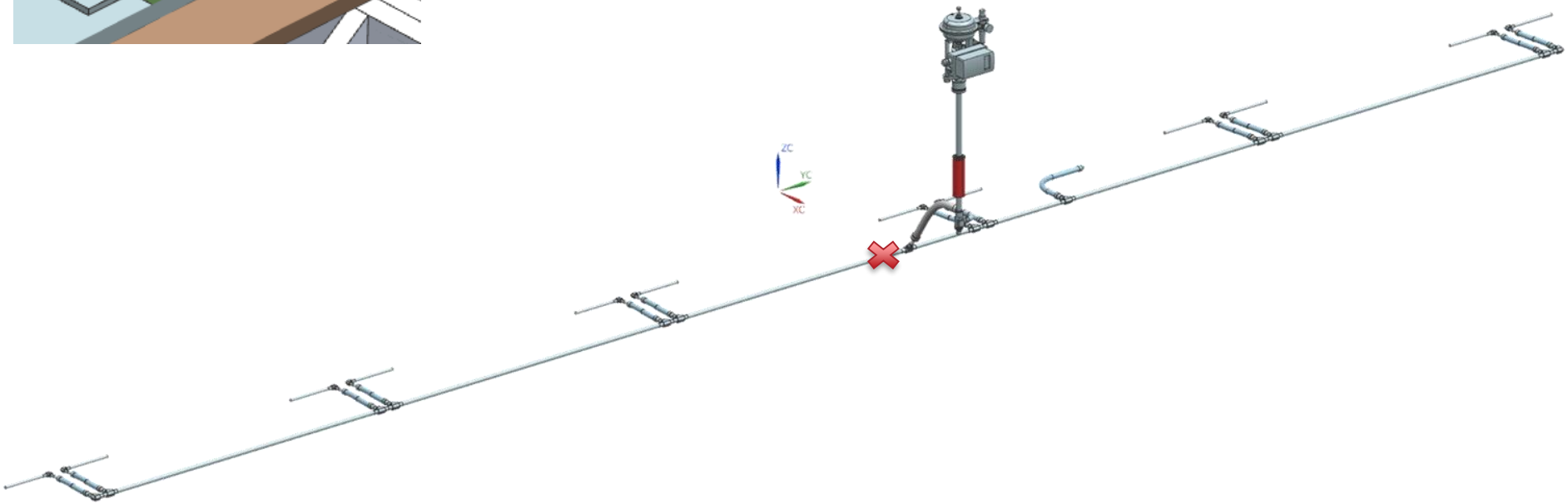

# 2K LINE (5G)

| | Mode | Frequency [Hz] |
|---|---|---|
| 1 | 1. | 25.36 |
| 2 | 2. | 27.144 |
| 3 | 3. | 31.516 |
| 4 | 4. | 34.879 |
| 5 | 5. | 42.53 |
| 6 | 6. | 45.389 |

## 5G

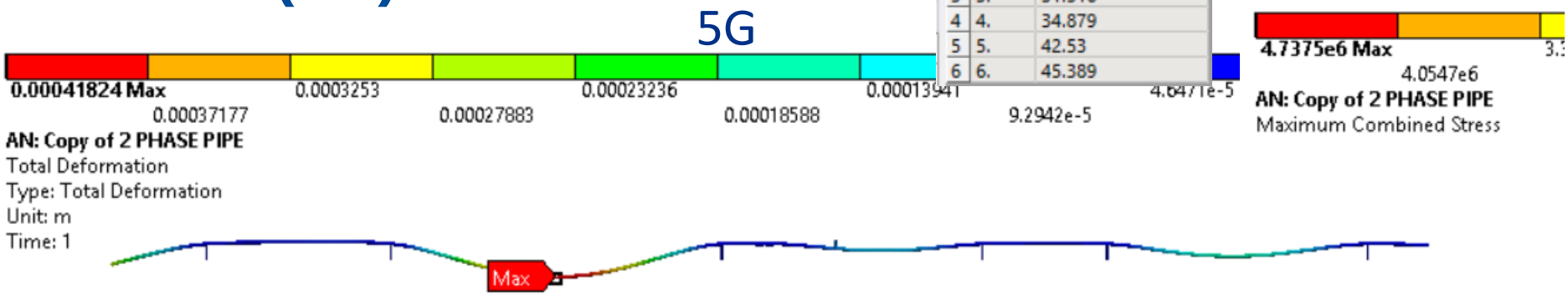


## 3G

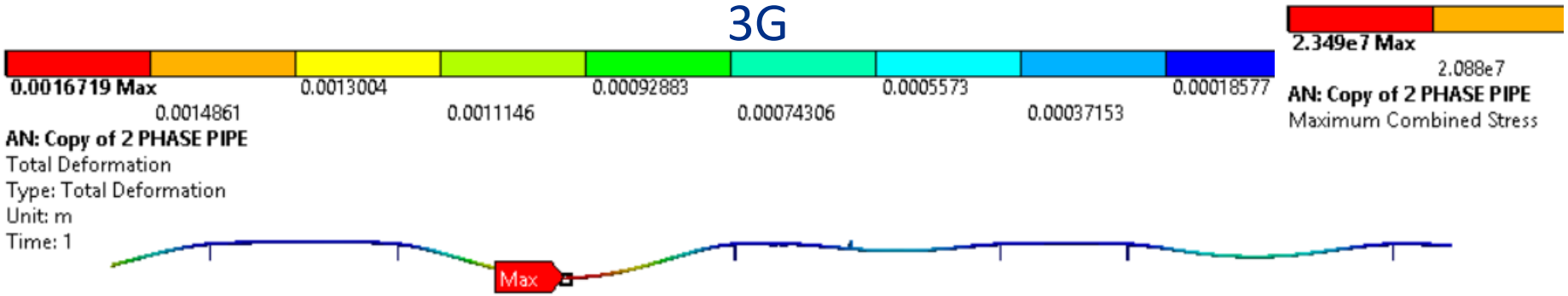


## 1.5G

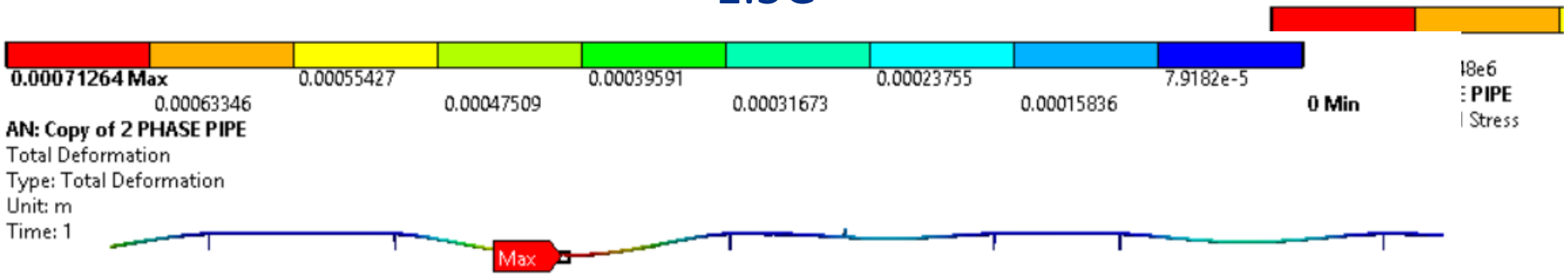

# 35-50K THERMAL SHIELD

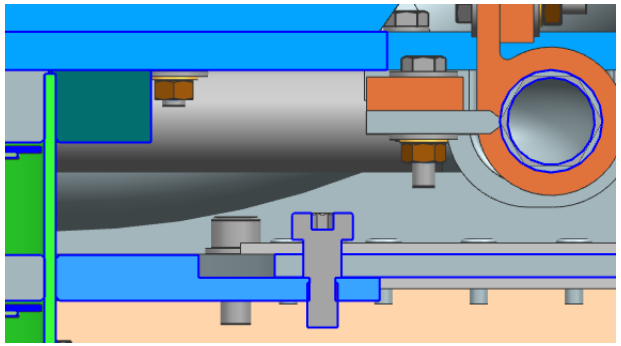

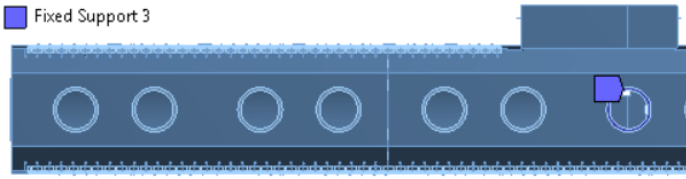


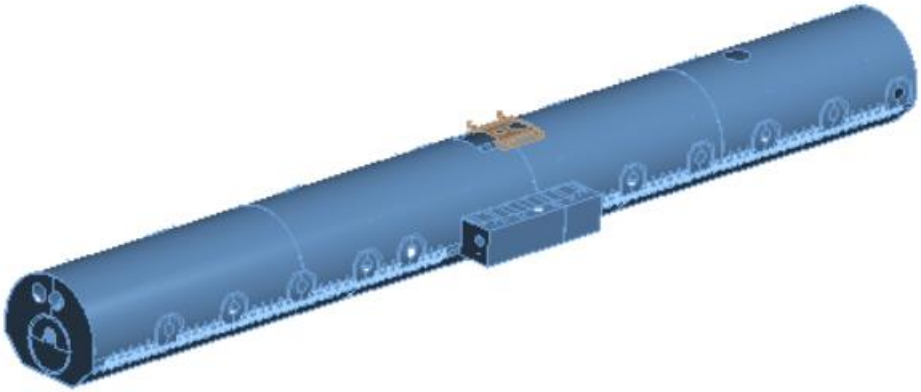

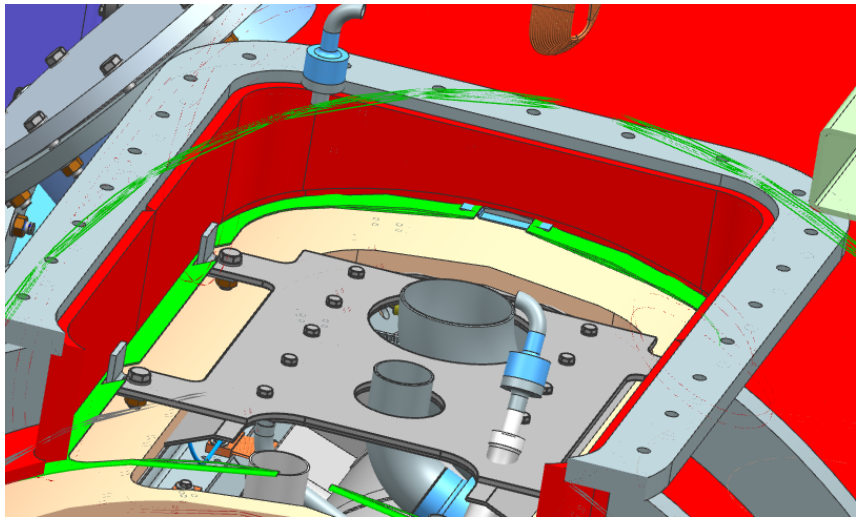

# 35-50K THERMAL

| | Mode | Frequency [Hz] |
|---|---|---|
| 1 | 1. | 42.532 |
| 2 | 2. | 46.197 |
| 3 | 3. | 48.023 |
| 4 | 4. | 48.761 |
| 5 | 5. | 49.44 |
| 6 | 6. | 51.008 |

BUMPERS NO SEPARATION

Type: Total Deformation
Unit: m
Time: 1

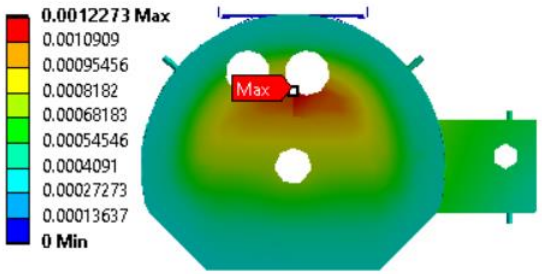


Type: Equivalent (von-Mises) Stress - Top/Bottom
Unit: Pa
Time: 1

5G

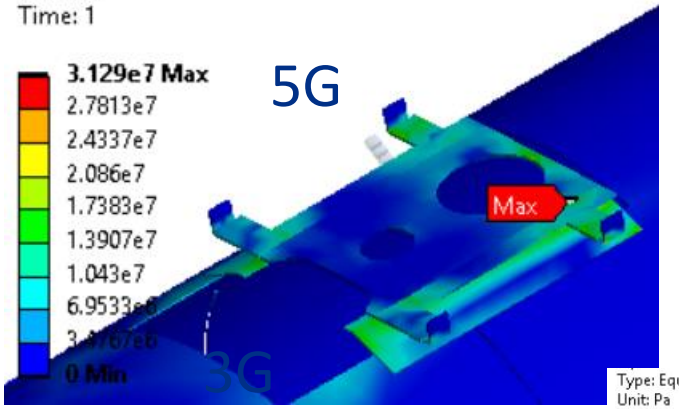


3G

Type: Equivalent (von-Mises) Stress - Top/Bottom
Unit: Pa
Time: 1

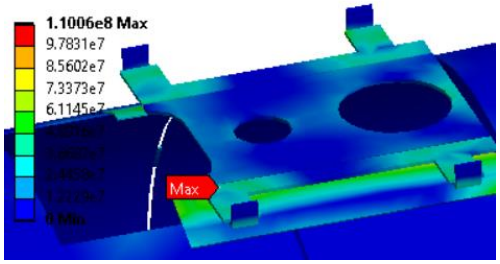


Type: Total Deformation
Unit: m
Time: 1

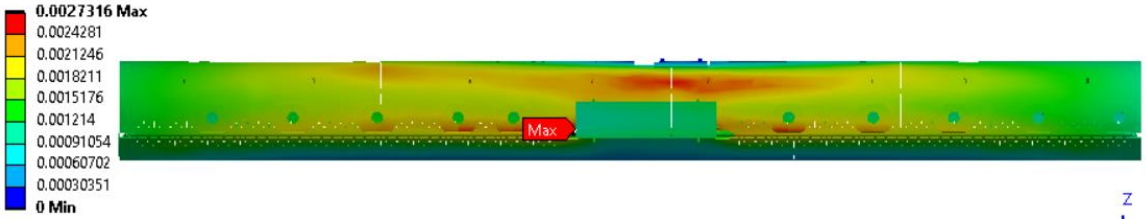


Type: Equivalent (von-Mises) Stress - Top/Bottom
Unit: Pa
Time: 1

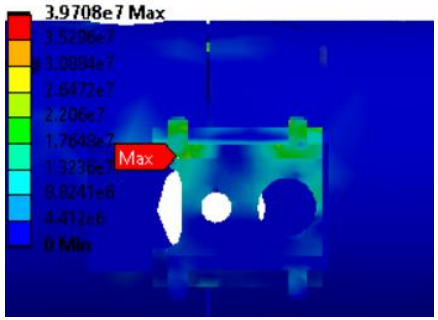


Type: Total Deformation
Unit: m
Time: 1

1.5G

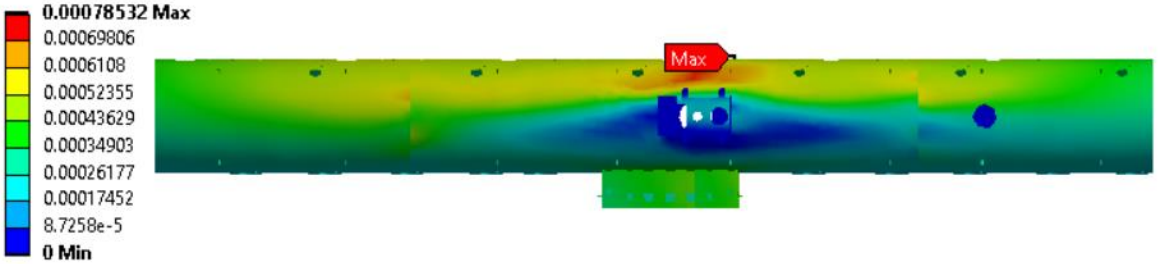

# RELIEF VALVE (MODAL)

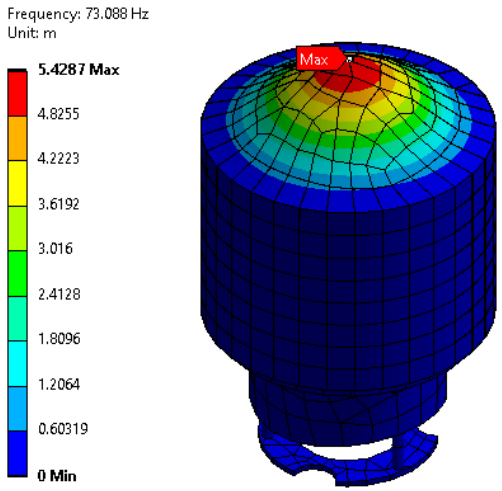


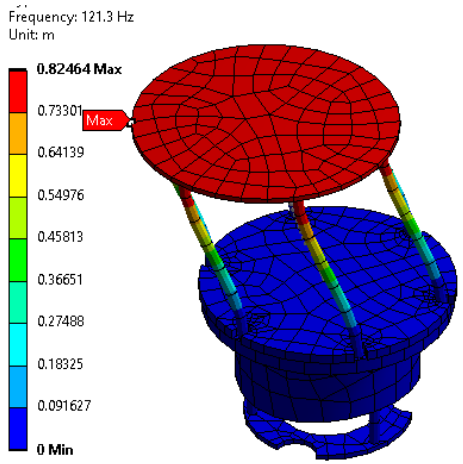


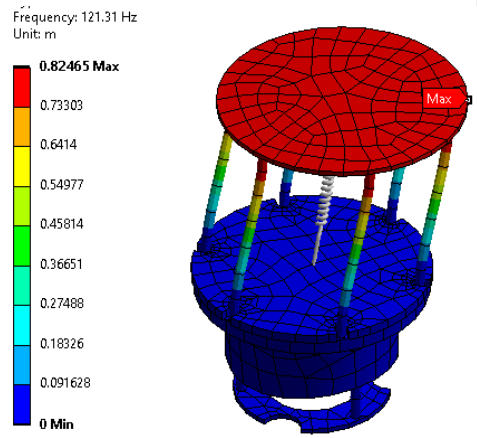


| | Mode | Frequency [Hz] |
|---|---|---|
| 1 | 1. | 73.088 |
| 2 | 2. | 121.3 |
| 3 | 3. | 121.31 |
| 4 | 4. | 156.47 |
| 5 | 5. | 158.01 |
| 6 | 6. | 158.99 |
| 7 | 7. | 223.73 |
| 8 | 8. | 251.62 |
| 9 | 9. | 263.07 |
| 10 | 10. | 266.39 |
| 11 | 11. | 313.64 |
| 12 | 12. | 316.85 |
| 13 | 13. | 396.21 |
| 14 | 14. | 400.08 |
| 15 | 15. | 511.11 |
| 16 | 16. | 522.38 |
| 17 | 17. | 558.83 |
| 18 | 18. | 566.31 |
| 19 | 19. | 743.16 |
| 20 | 20. | 757.69 |
| 21 | 21. | 771.21 |
| 22 | 22. | 777.43 |
| 23 | 23. | 823.42 |
| 24 | 24. | 825.32 |
| 25 | 25. | 826.14 |
| 26 | 26. | 861.04 |
| 27 | 27. | 872.38 |
| 28 | 28. | 873.51 |
| 29 | 29. | 875.28 |
| 30 | 30. | 878.13 |

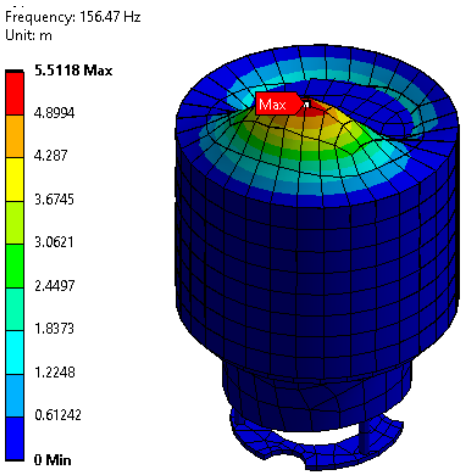


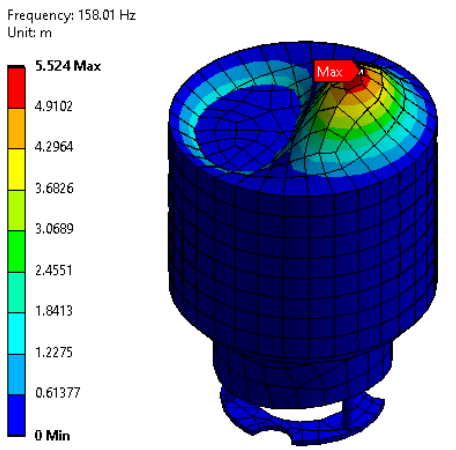


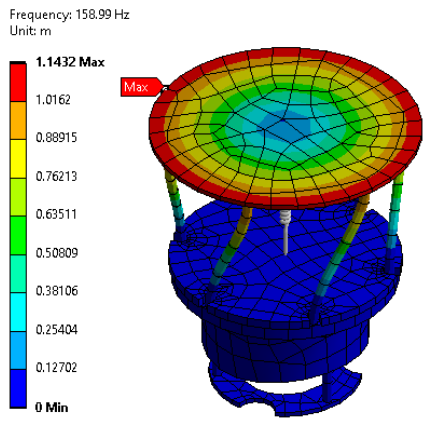


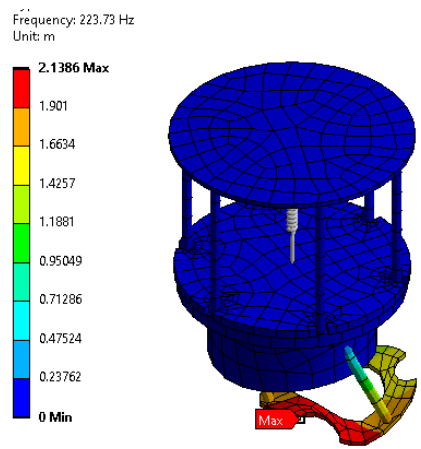

# CRYO VALVE (MODAL)

Static Structural
Time: 1. s

A Standard Earth Gravity: 9.8066 m/s²
B Fixed Support

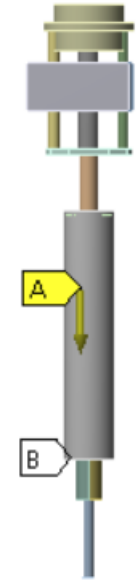


Type: Total Deformation
Frequency: 17.924 Hz
Unit: m

0.37712 Max
0.33522
0.29332
0.25141
0.20951
0.16761
0.12571
0.083805
0.041902
0 Min

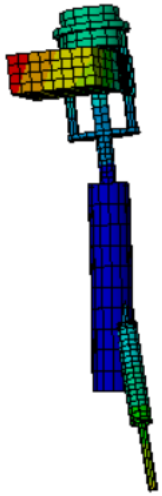

Type: Total Deformation
Frequency: 20.85 Hz
Unit: m

0.58899 Max
0.52354
0.4581
0.39266
0.32721
0.26177
0.19633
0.13089
0.065443
0 Min

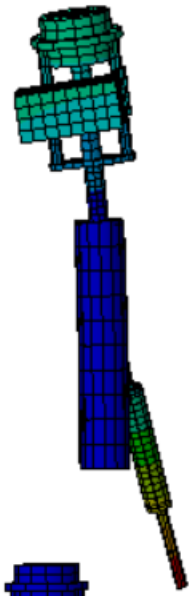

Type: Total Deformation
Frequency: 25.333 Hz
Unit: m

1.4422 Max
1.282
1.1217
0.9615
0.80125
0.641
0.48075
0.3205
0.16025
0 Min

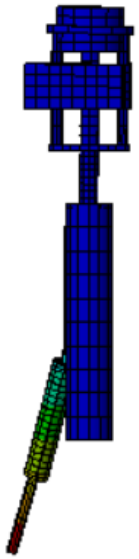

Total Deformation 4
Type: Total Deformation
Frequency: 26.375 Hz
Unit: m

1.3891 Max
1.2347
1.0804
0.92603
0.7717
0.61736
0.46302
0.30868
0.15434
0 Min

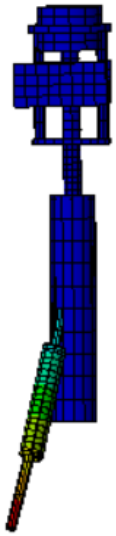

| | Mode | Frequency [Hz] |
|---|---|---|
| 1 | 1. | 17.924 |
| 2 | 2. | 20.85 |
| 3 | 3. | 25.333 |
| 4 | 4. | 26.375 |
| 5 | 5. | 32.897 |
| 6 | 6. | 57.83 |

# VACUUM VESSEL(BOTTOM MOUNT, SUPPORTS)

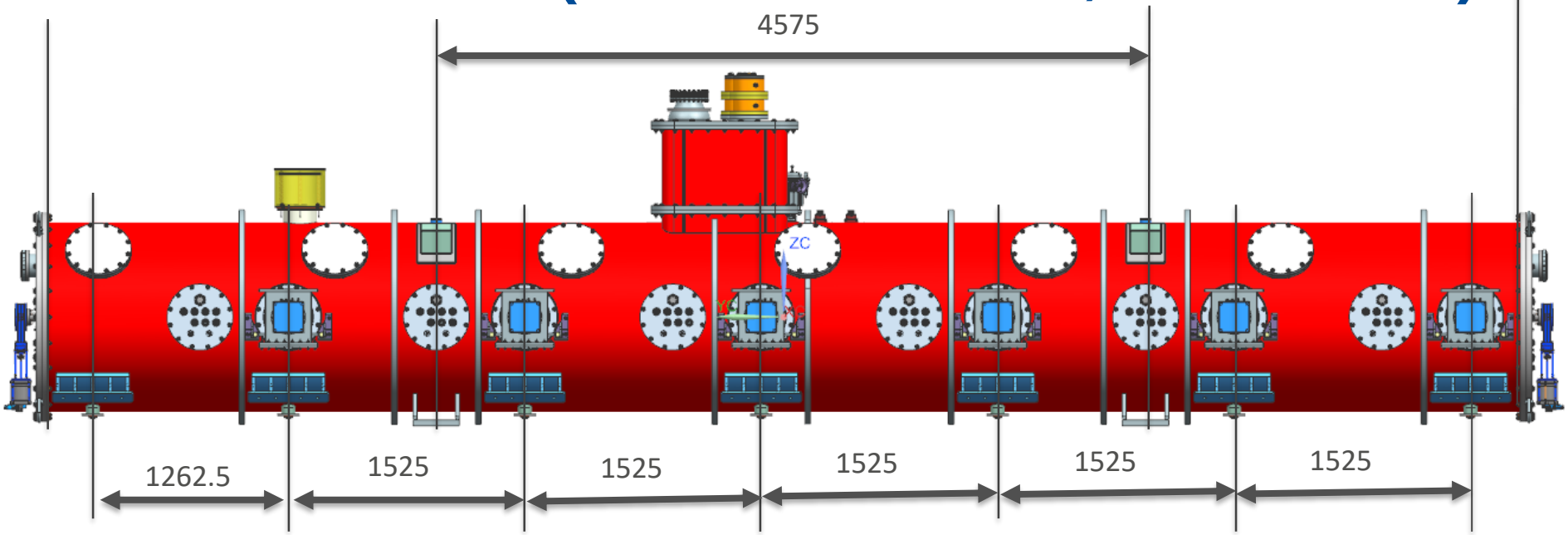


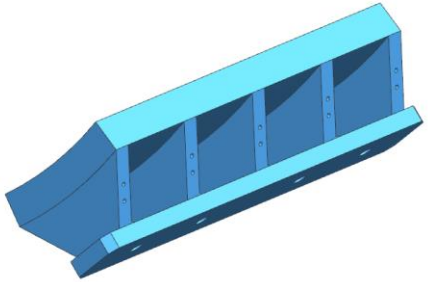

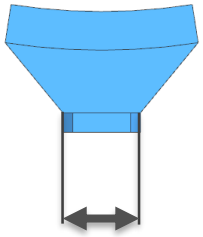


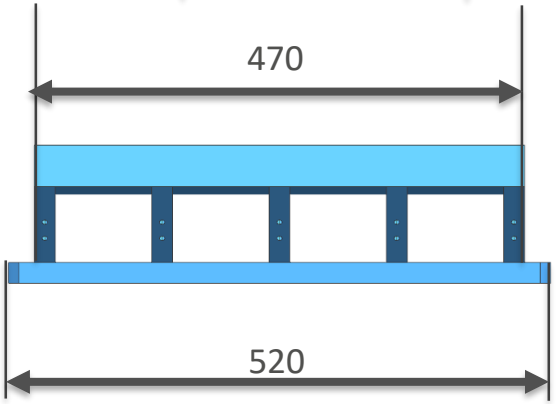

# FRAME

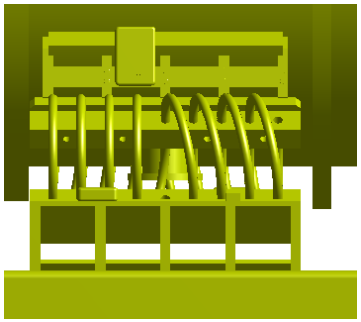

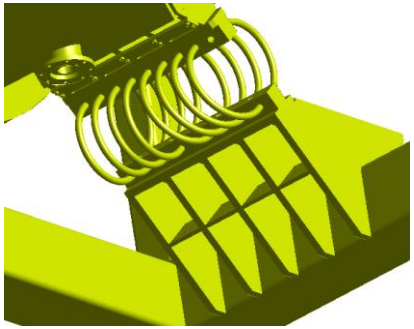

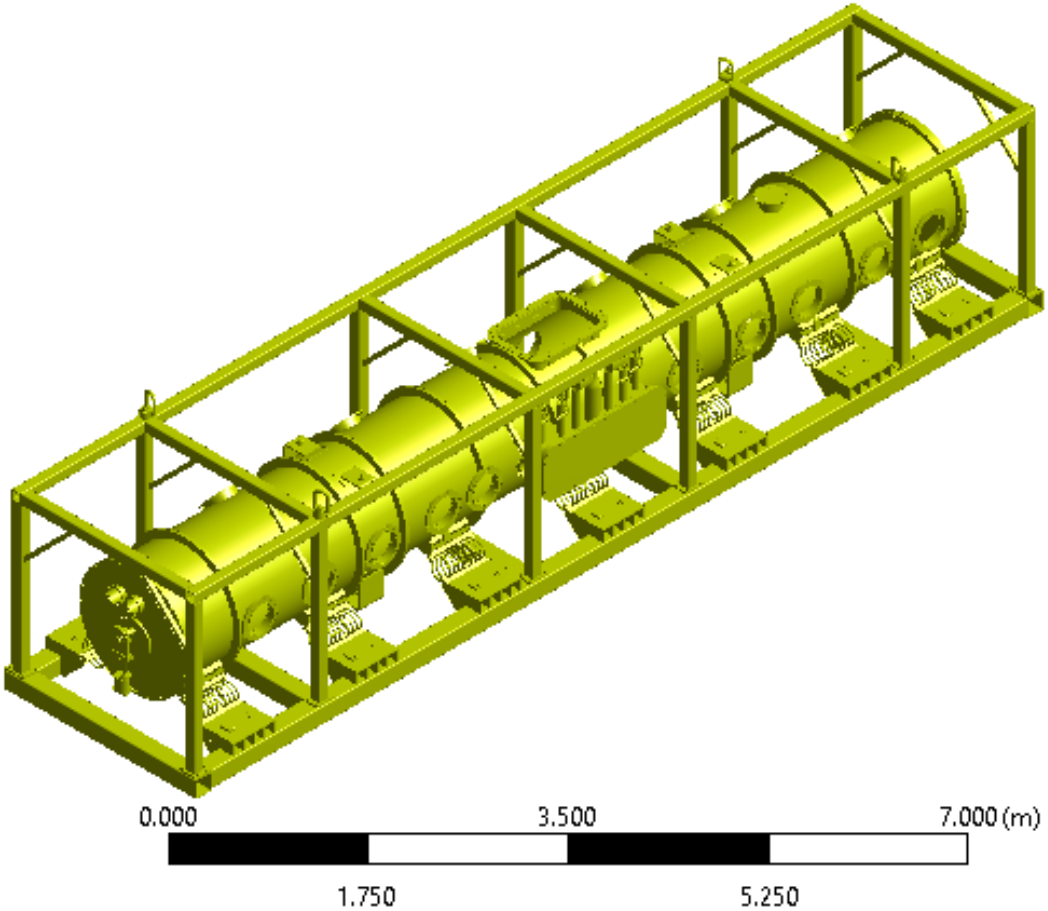


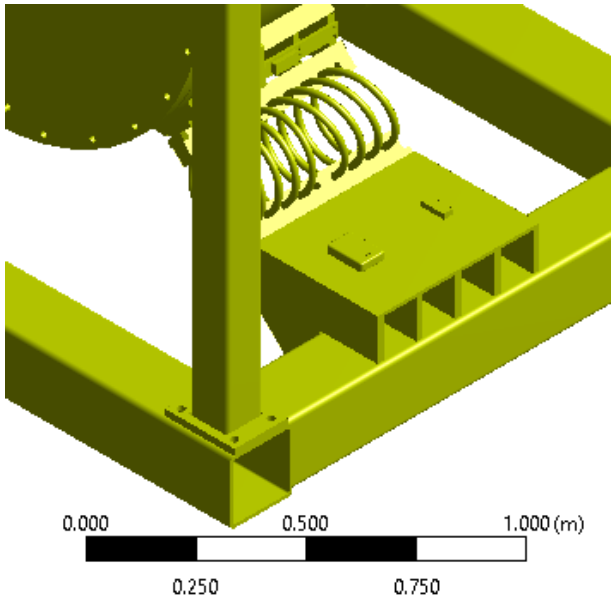

# VACUUM VESSEL

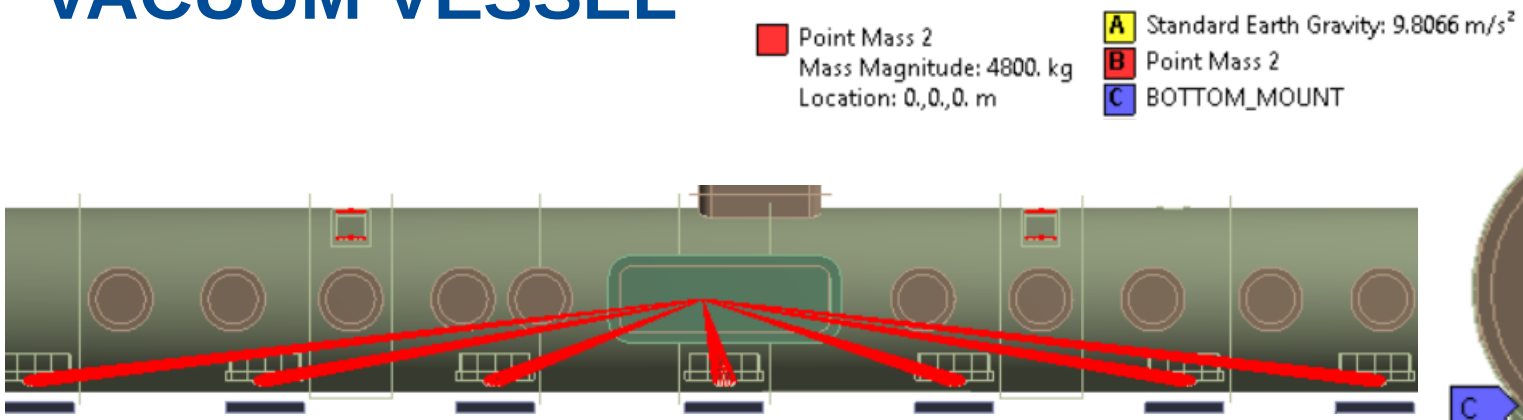

| | Mode | Frequency [Hz] |
|---|---|---|
| 1 | 1. | 37.979 |
| 2 | 2. | 49.1 |
| 3 | 3. | 59.055 |
| 4 | 4. | 62.366 |
| 5 | 5. | 72.302 |
| 6 | 6. | 84.294 |

5G

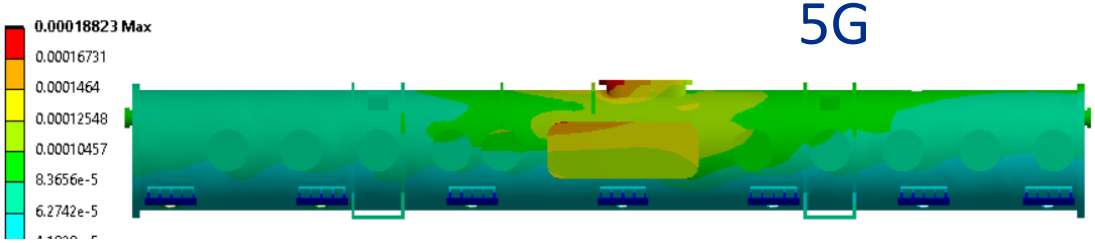


3G

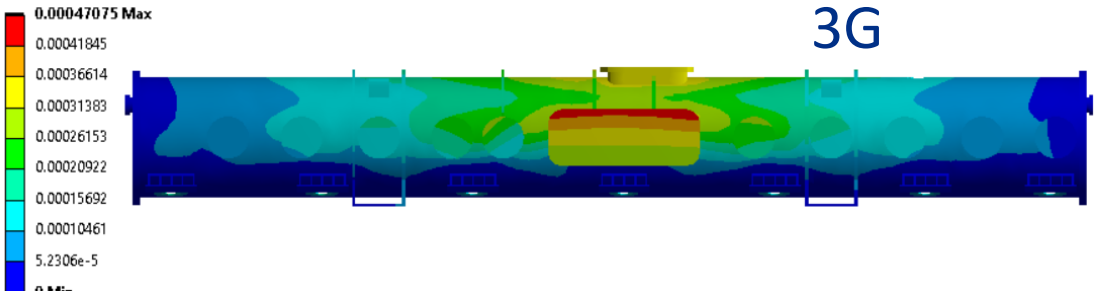


Type: Total Deformation
Unit: m
Time: 1

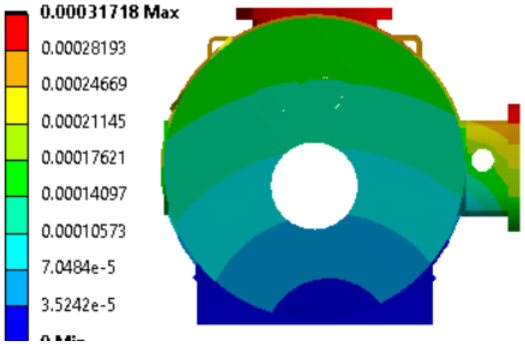

# CRYOMODULE

No global magnetic shielding
Old cavity support design

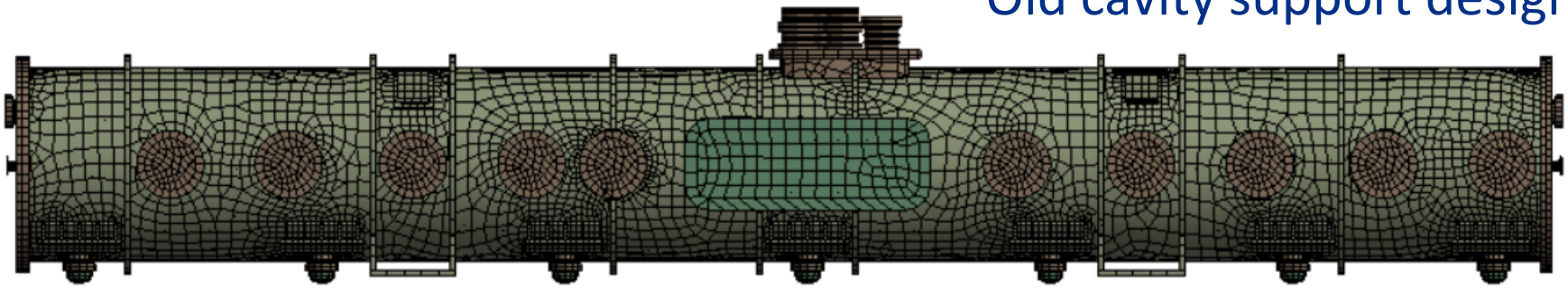

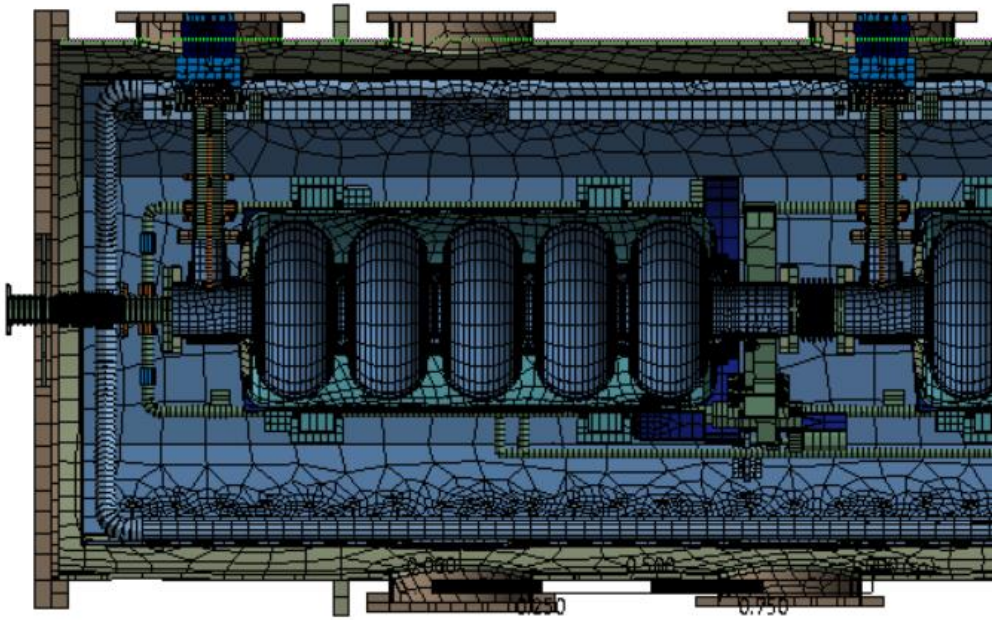

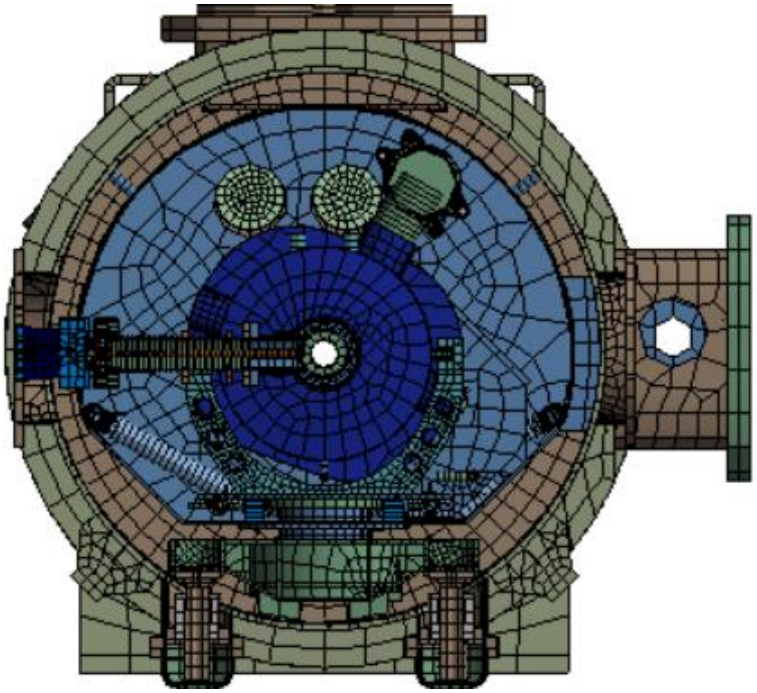

# CRYOMODULE

## 5G

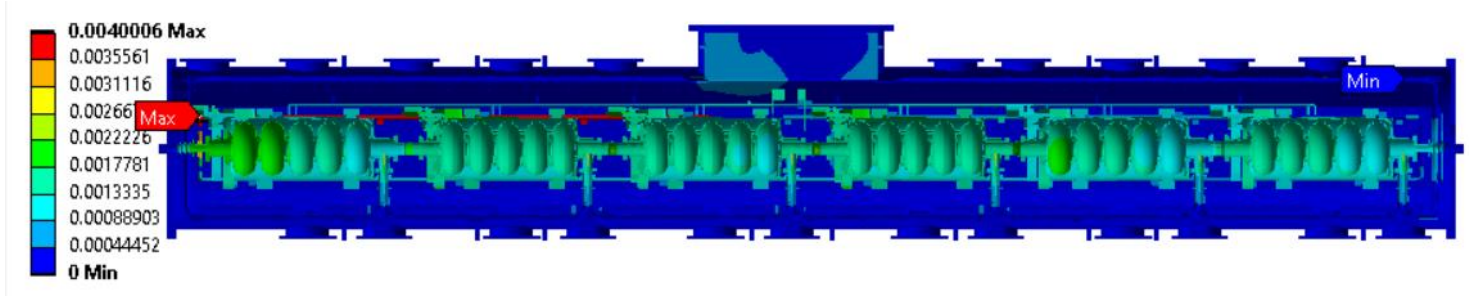


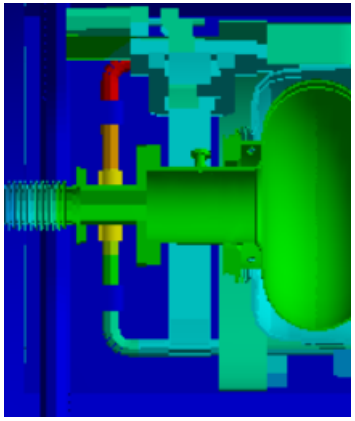

## 3G

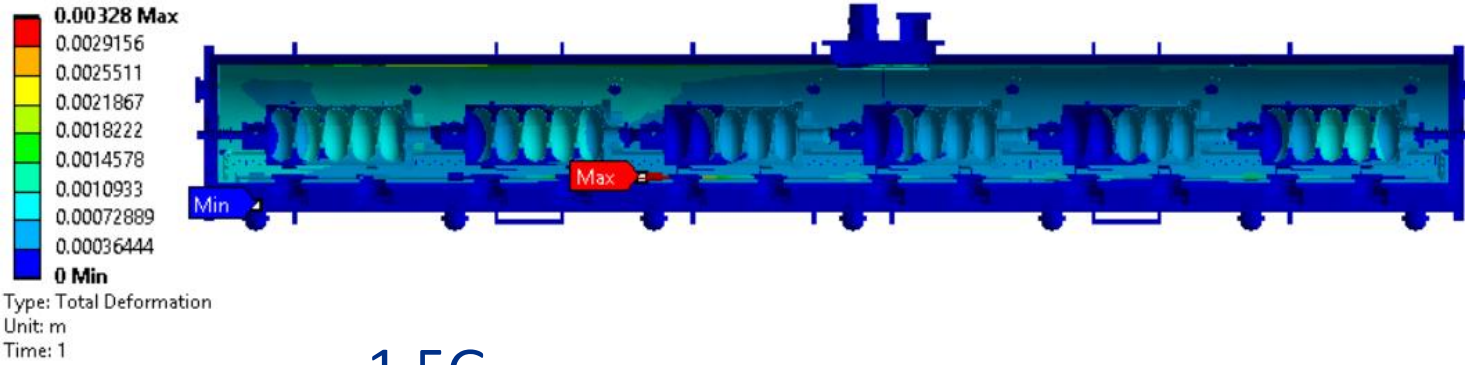


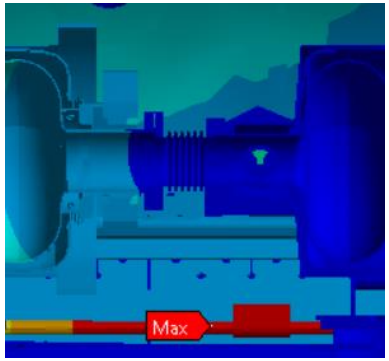


## 1.5G

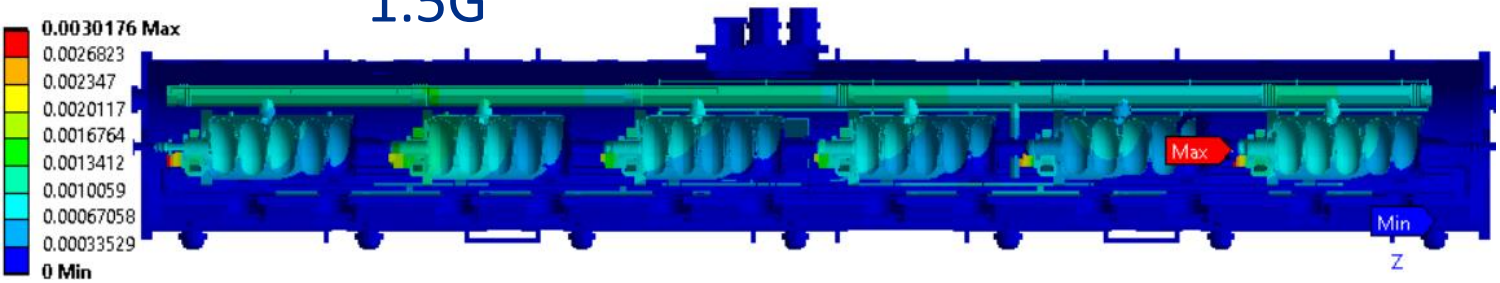


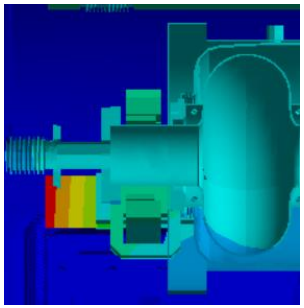

# CRYOMODULE

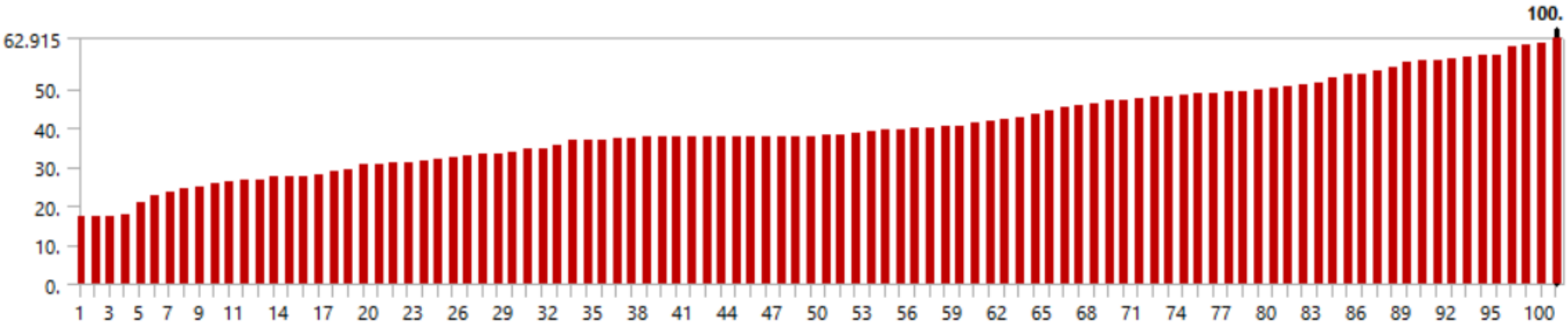


| | Mode | Frequency [Hz] |
|---|---|---|
| 1 | 1. | 17.427 |
| 2 | 2. | 17.433 |
| 3 | 3. | 17.435 |
| 4 | 4. | 17.882 |
| 5 | 5. | 20.751 |
| 6 | 6. | 22.436 |
| 7 | 7. | 23.271 |
| 8 | 8. | 24.268 |
| 9 | 9. | 25.022 |
| 10 | 10. | 25.804 |
| 11 | 11. | 26.273 |
| 12 | 12. | 26.403 |
| 13 | 13. | 26.741 |
| 14 | 14. | 27.388 |
| 15 | 15. | 27.433 |
| 16 | 16. | 27.464 |
| 17 | 17. | 27.749 |
| 18 | 18. | 28.924 |
| 19 | 19. | 29.413 |
| 20 | 20. | 30.574 |
| 21 | 21. | 30.616 |
| 22 | 22. | 30.816 |
| 23 | 23. | 31.208 |
| 24 | 24. | 31.405 |
| 25 | 25. | 31.948 |

| | Mode | Frequency [Hz] |
|---|---|---|
| 26 | 26. | 32.421 |
| 27 | 27. | 32.712 |
| 28 | 28. | 33.163 |
| 29 | 29. | 33.218 |
| 30 | 30. | 33.735 |
| 31 | 31. | 34.365 |
| 32 | 32. | 34.776 |
| 33 | 33. | 35.502 |
| 34 | 34. | 36.638 |
| 35 | 35. | 36.774 |
| 36 | 36. | 36.893 |
| 37 | 37. | 37.064 |
| 38 | 38. | 37.17 |
| 39 | 39. | 37.47 |
| 40 | 40. | 37.497 |
| 41 | 41. | 37.497 |
| 42 | 42. | 37.497 |
| 43 | 43. | 37.498 |
| 44 | 44. | 37.498 |
| 45 | 45. | 37.508 |
| 46 | 46. | 37.524 |
| 47 | 47. | 37.528 |
| 48 | 48. | 37.533 |
| 49 | 49. | 37.538 |
| 50 | 50. | 37.544 |

| | Mode | Frequency [Hz] |
|---|---|---|
| 51 | 51. | 37.923 |
| 52 | 52. | 38.195 |
| 53 | 53. | 38.369 |
| 54 | 54. | 38.8 |
| 55 | 55. | 39.351 |
| 56 | 56. | 39.451 |
| 57 | 57. | 39.816 |
| 58 | 58. | 39.975 |
| 59 | 59. | 40.164 |
| 60 | 60. | 40.52 |
| 61 | 61. | 41.012 |
| 62 | 62. | 41.751 |
| 63 | 63. | 42.038 |
| 64 | 64. | 42.61 |
| 65 | 65. | 43.273 |
| 66 | 66. | 44.368 |
| 67 | 67. | 45.076 |
| 68 | 68. | 45.757 |
| 69 | 69. | 46.187 |
| 70 | 70. | 46.784 |
| 71 | 71. | 47.131 |
| 72 | 72. | 47.317 |
| 73 | 73. | 47.921 |
| 74 | 74. | 48.041 |
| 75 | 75. | 48.451 |

| | | |
|---|---|---|
| 76 | 76. | 48.662 |
| 77 | 77. | 48.863 |
| 78 | 78. | 48.987 |
| 79 | 79. | 49.188 |
| 80 | 80. | 49.472 |
| 81 | 81. | 49.852 |
| 82 | 82. | 50.568 |
| 83 | 83. | 50.857 |
| 84 | 84. | 51.566 |
| 85 | 85. | 52.634 |
| 86 | 86. | 53.514 |
| 87 | 87. | 53.599 |
| 88 | 88. | 54.612 |
| 89 | 89. | 55.465 |
| 90 | 90. | 56.661 |
| 91 | 91. | 57.03 |
| 92 | 92. | 57.326 |
| 93 | 93. | 57.686 |
| 94 | 94. | 58.084 |
| 95 | 95. | 58.422 |
| 96 | 96. | 58.571 |
| 97 | 97. | 60.749 |
| 98 | 98. | 61.006 |
| 99 | 99. | 61.604 |
| 100 | 100. | 62.915 |

# CRYOMODULE

## #1 17.427Hz

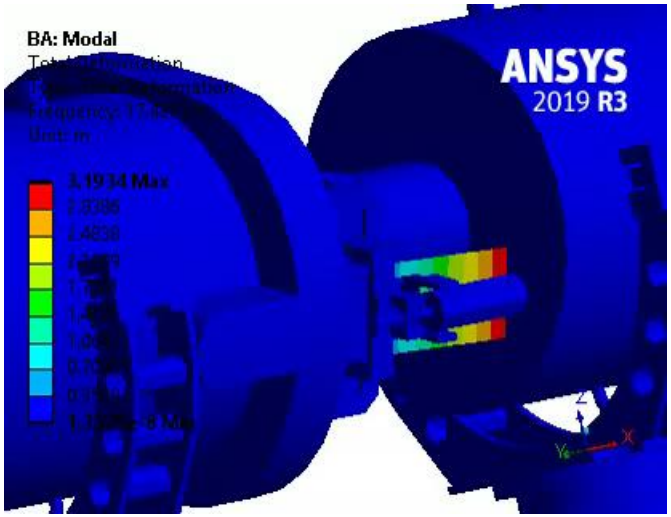


## #1 17.427Hz

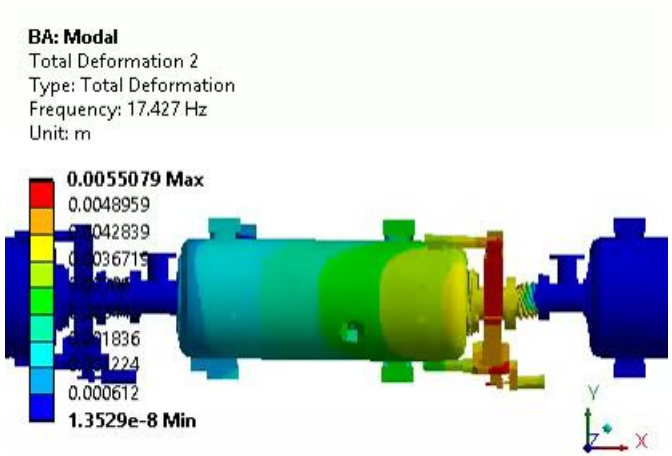


## #2 20.751Hz

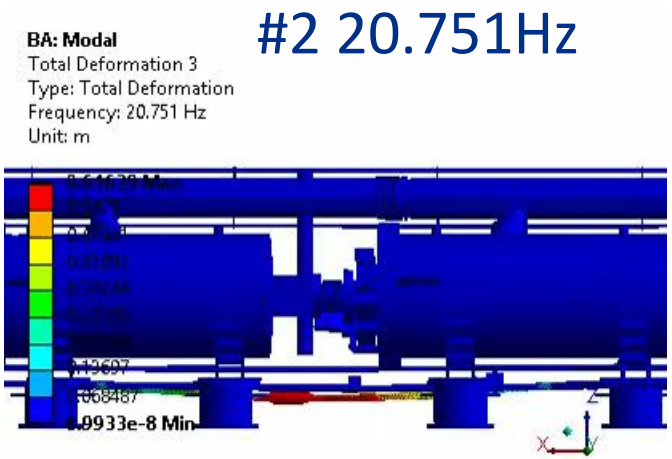


## #7 23.271Hz

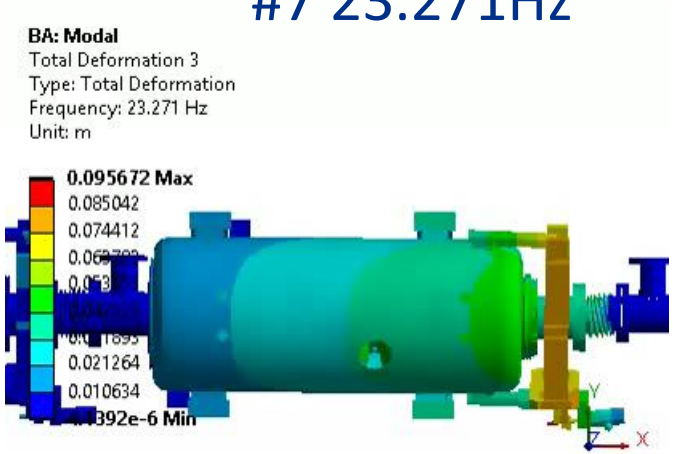

# SUMMARY

- 650MHZ HB PCM transportation analysis (static structural, modal) was performed for individual components, sub assemblies and main assembly

- The results (ED0012420) of 650MHZ HB PCM design analysis show no limitations from cryomodule transportation objectives

- Analysis has identified some features to be modified
  - The improvements have already been incorporated in CM design