Instrumentation Frontier/Accelerator Frontier Liaison – Andy White

- Machine Detector Interface
  IR/VTX, forward calorimetry, accelerator elements in detector
- Beam conditions
  Machine backgrounds: muons, pairs,…
- Beam structure
  Timing, train/bunch, …
- Luminosity measurement

- Accelerator parameters
  Tables, updates,…

Some examples of IF-IF interactions…

ILC Machine Detector Interface Studies

BDS muon study

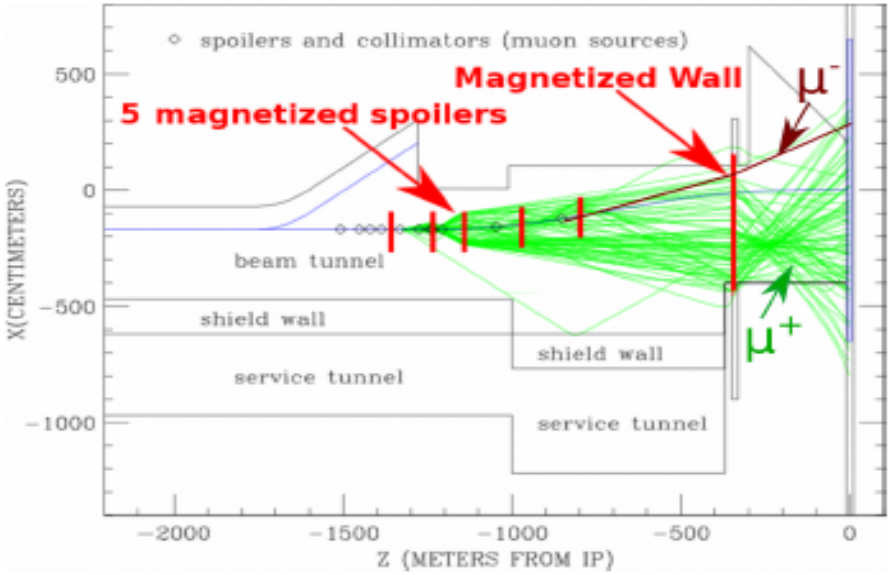

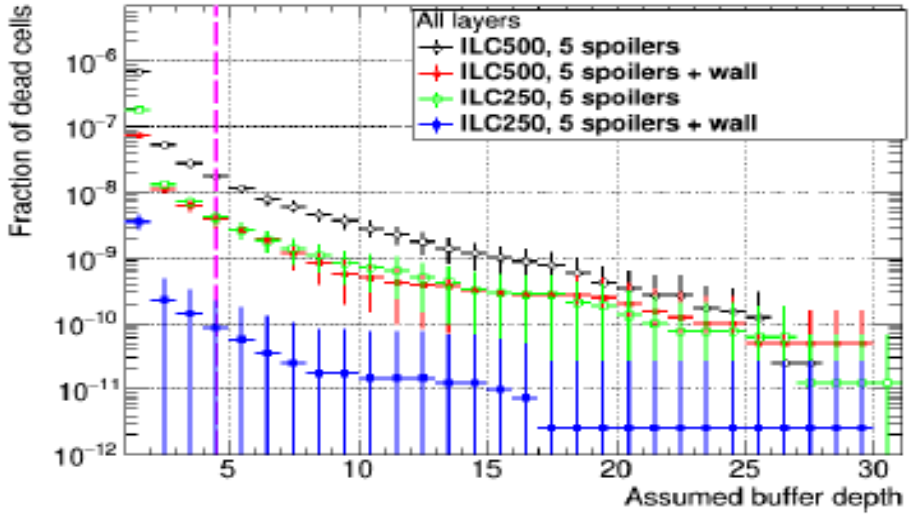

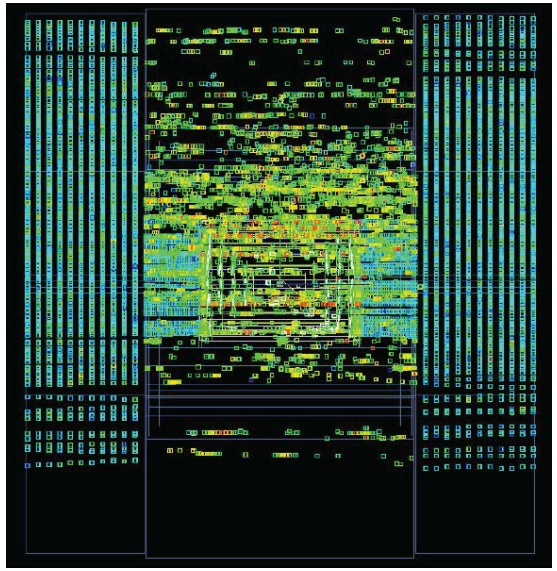

#muons / bunch crossing	ILC250	ILC500
No shielding	39.3	130.1
Magnetized spoilers	1.3	4.3
Magnetized spoilers + wall	0.03	0.6

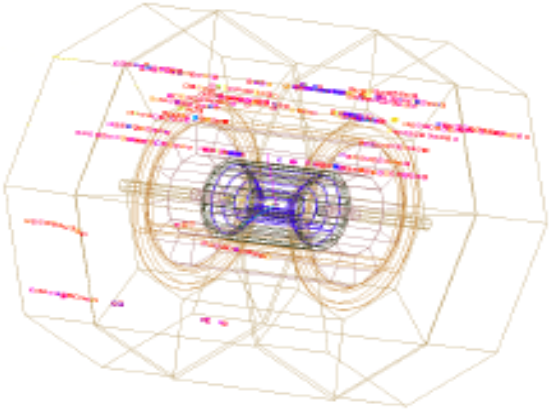

At ILC250, magnetized spoilers without wall are sufficient for occupancy mitigation.

Wall might me neccessary at higher stages, and as a tertiary containment device

Anne Scheutz (DESY)

Beam-related background - pairs

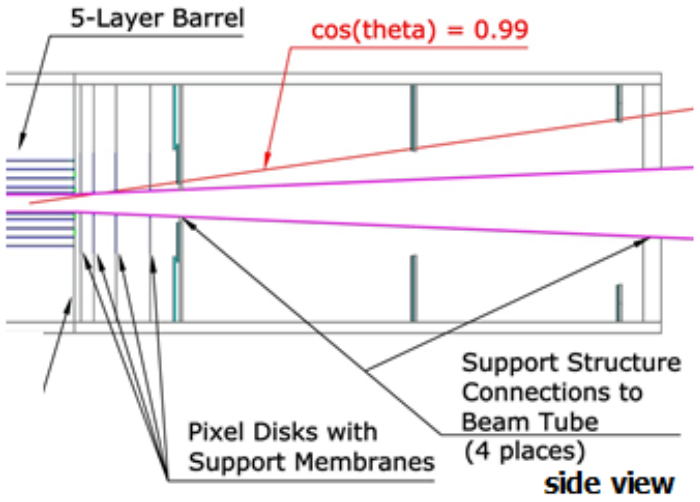

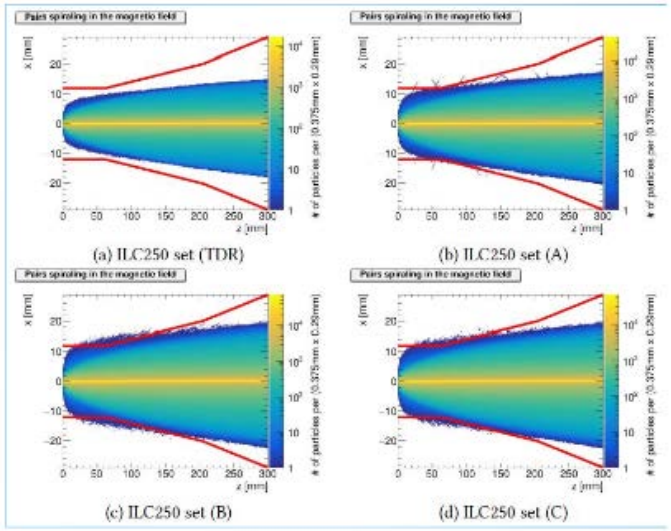

Anne Schuetz
(DESY)

ILD

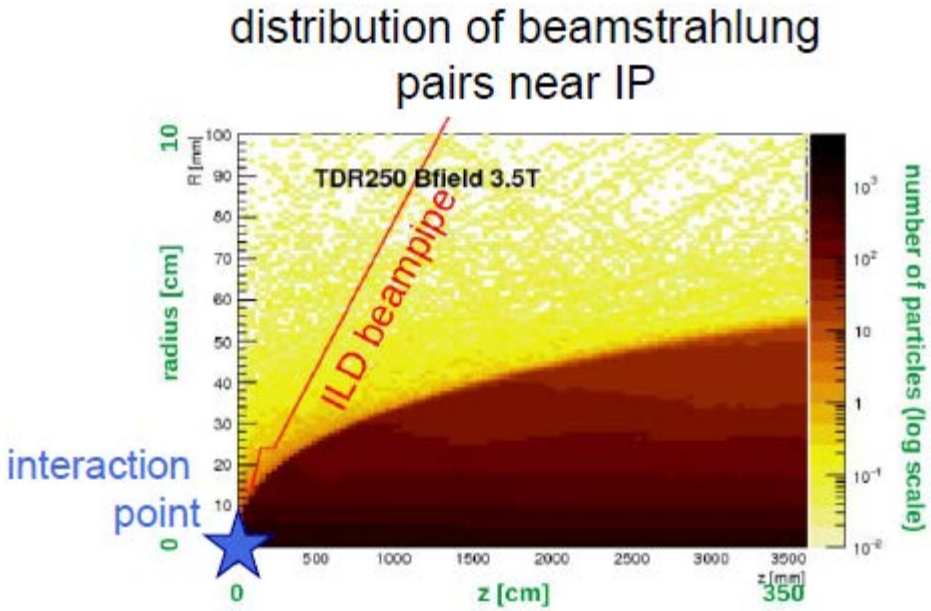

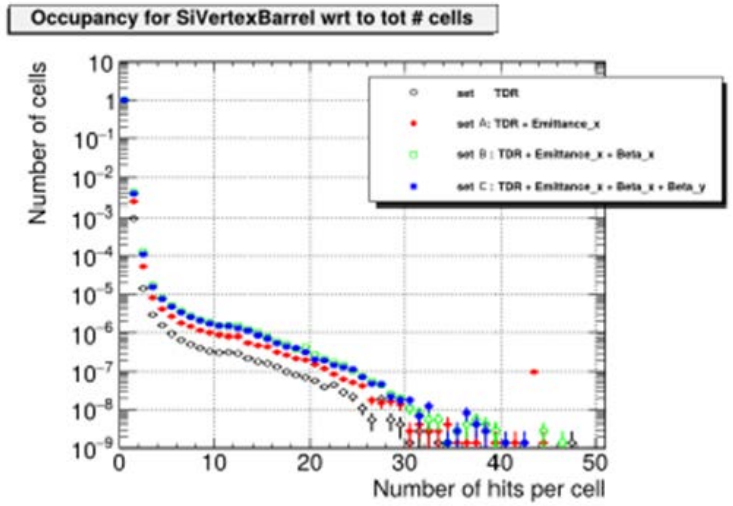

ILC – redesign with modified (common) L* = 4.1m

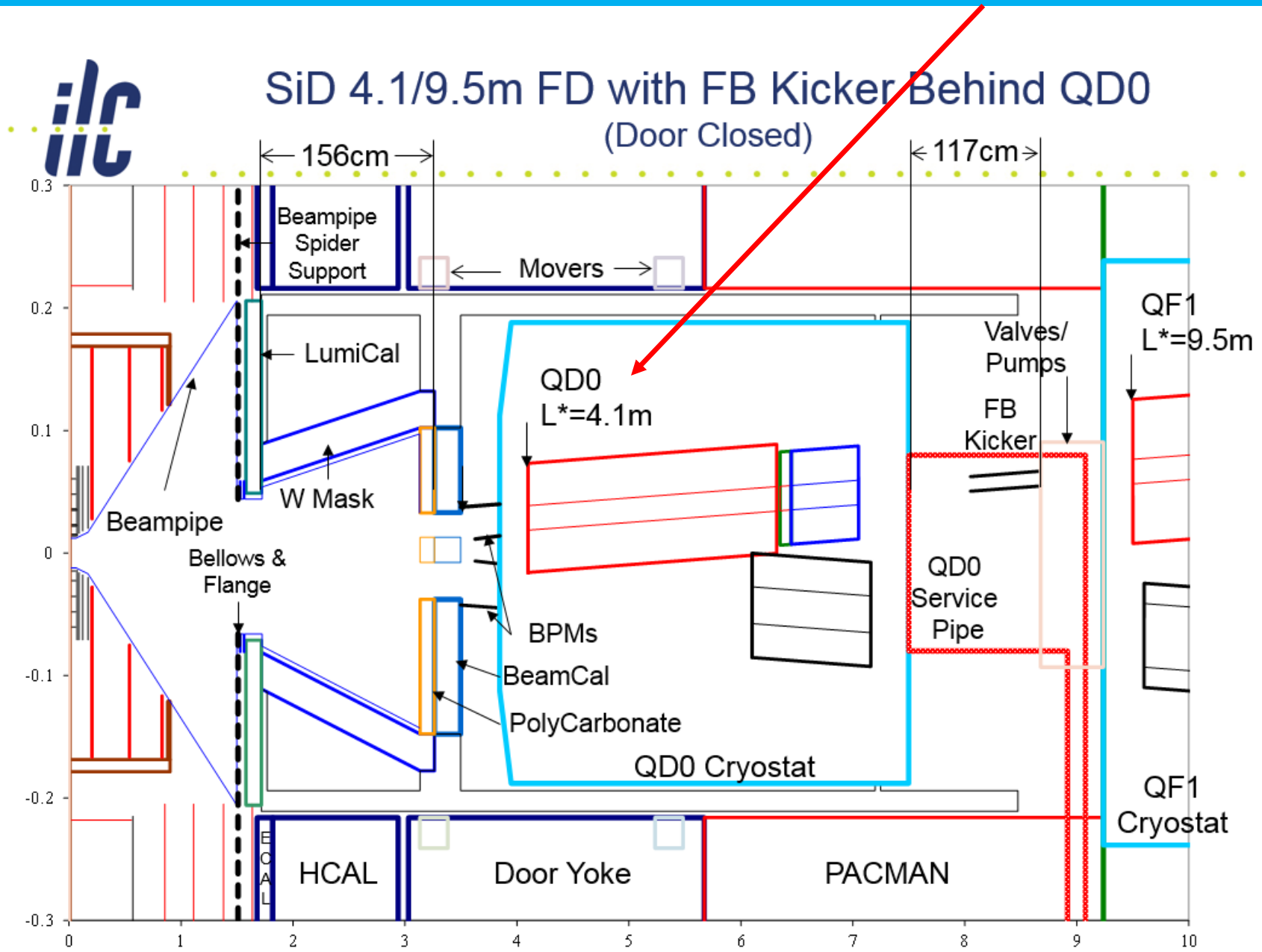

ILC - Forward region

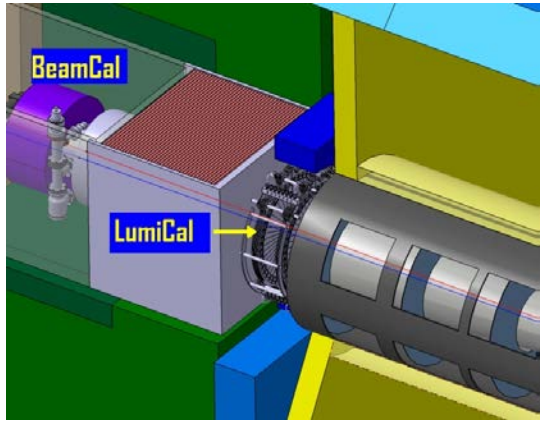

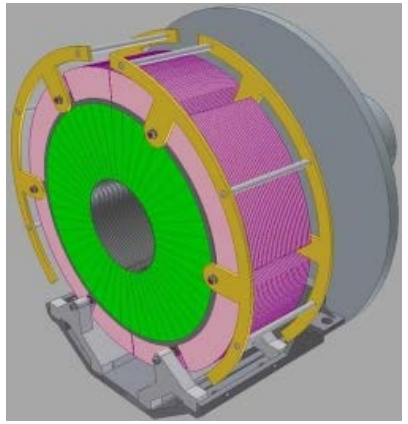

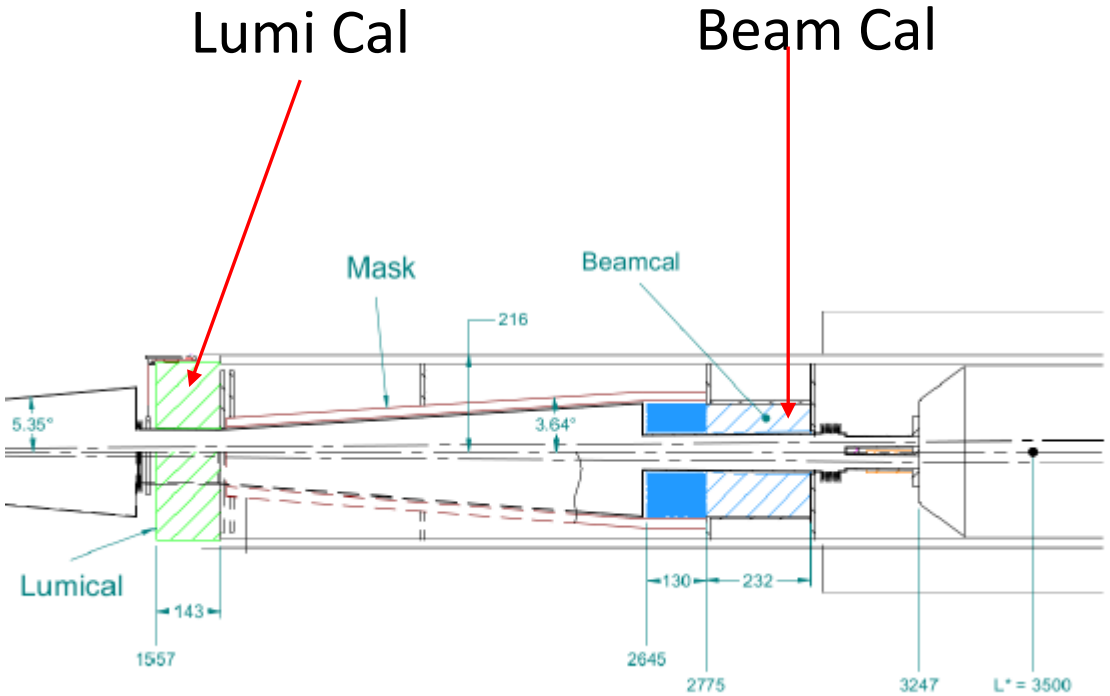

Sensor irradiation studies for Forward Calorimetry
(B. Schumm et al. UCSC – SLAC Expt. T-506)
BeamCal radiation dose at inner radius ~**100 Mrad/year**

570 Mrad Exposure

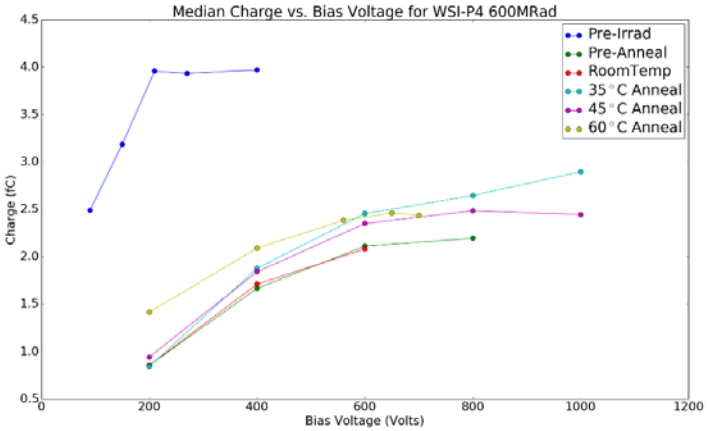

Micron
PF Si Diode
300μm
Area 0.025 cm²

Challenge – achieving 10^{-4} precision
Critical positioning of innermost layer w.r.t. beam position.

Beam parameters – ILC example

			Z-Pole [4]			Higgs [2,5]			500GeV [1]		TeV [1]
			Baseline	Lum. Up	Baseline	Lum. Up	L Up.10Hz	Baseline	Lum. Up	case B
Center-of-Mass Energy	E_{CM}	GeV	91.2	91.2	250	250	250	500	500	1000
Beam Energy	E_{beam}	GeV	45.6	45.6	125	125	125	250	250	500
Collision rate	f_{col}	Hz	3.7	3.7	5	5	10	5	5	4
Pluse interval in electron main linac		ms	135	135	200	200	100	200	200	200
Number of bunches	n_b		1312	2625	1312	2625	2625	1312	2625	2450
Bunch population	N	10^{10}	2	2	2	2	2	2	2	1.737
Bunch separation	Δt_b	ns	554	554	554	366	366	554	366	366
Beam current		mA	5.79	5.79	5.79	8.75	8.75	5.79	8.75	7.60
Average beam power at IP (2 beams)	P_B	MW	1.42	2.84	5.26	10.5	21.0	10.5	21.0	27.3
RMS bunch length at ML & IP	σ_z	mm	0.41	0.41	0.30	0.30	0.30	0.30	0.30	0.225
Emittance at IP (x)	γe^*_x	μm	6.2	6.2	5.0	5.0	5.0	10.0	10.0	10.0
Emittance at IP (y)	γe^*_y	nm	48.5	48.5	35.0	35.0	35.0	35.0	35.0	30.0
Beam size at IP (x)	σ^*_x	μm	1.118	1.118	0.515	0.515	0.515	0.474	0.474	0.335
Beam size at IP (y)	σ^*_y	nm	14.56	14.56	7.66	7.66	7.66	5.86	5.86	2.66
Luminosity	L	$10^{34}/cm^2/s$	0.205	0.410	1.35	2.70	5.40	1.79	3.60	5.11
Luminosity enhancement factor	H_D		2.16	2.16	2.55	2.55	2.55	2.38	2.39	1.93
Luminosity at top 1%	$L_{0.01}/L$	%	99.0	99.0	74	74	74	58	58	45
Number of beamstrahlung photons	n_g		0.841	0.841	1.91	1.91	1.91	1.82	1.82	2.05
Beamstrahlung energy loss	δ_{BS}	%	0.157	0.157	2.62	2.62	2.62	4.5	4.5	10.5
AC power [6]	Psite	MW			111	138	198	173	215	300
Site length	Lsite	km	20.5	20.5	20.5	20.5	20.5	31	31	40

Instrumentation Frontier/Accelerator Frontier Liaison

- Poll Instrumentation Frontier subgroups regarding needs.
- Facilitate provision of beam parameters, beam backgrounds, luminosity measurements, beam timing,… from AF -> IF
- Take back detector subgroup concerns to Accelerator Frontier
- Possible joint sessions IF-AF