Fermi National Accelerator Laboratory

PIP-II ISD HB650 Cryomodule

Author: B. Squires, V. Roger

Document Number: ED0007562

Managed by Fermi Research Alliance, LLC for the
U.S. Department of Energy Office of Science
www.fnal.gov

Revision History		
Author	Revision Date	Description of Change
V. Roger	A	Update before FDR

Table of Contents

Purpose of this document

The purpose of this document is to map out the external interfaces of the HB650 cryomodule, i.e. how it interfaces with the connected systems of PIP-II and the PIP-II Injector Test (formerly known as PXIE). This document endeavors to cover all connections to the HB650 cryomodule that will be made in the PIP-II Injector Test cave or PIP-II Tunnel.

The HB650 cryomodule itself is documented in model/drawing F10047288:

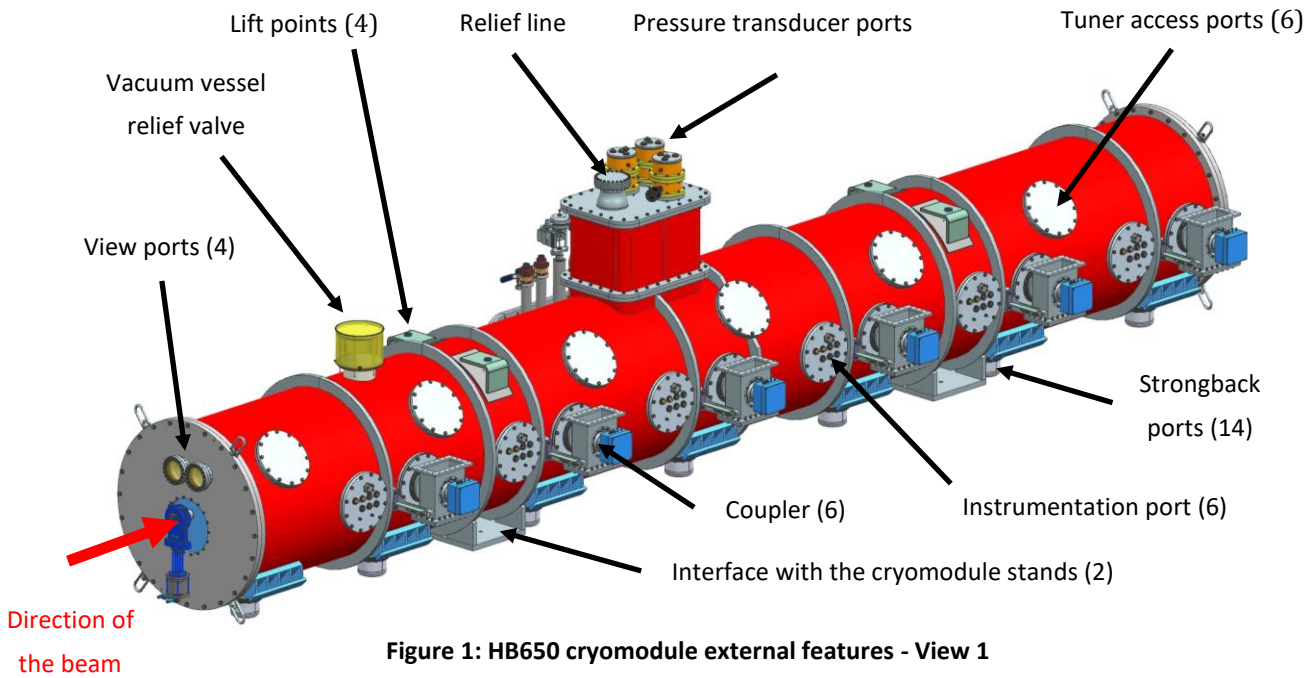

Figure 1: HB650 cryomodule external features - View 1

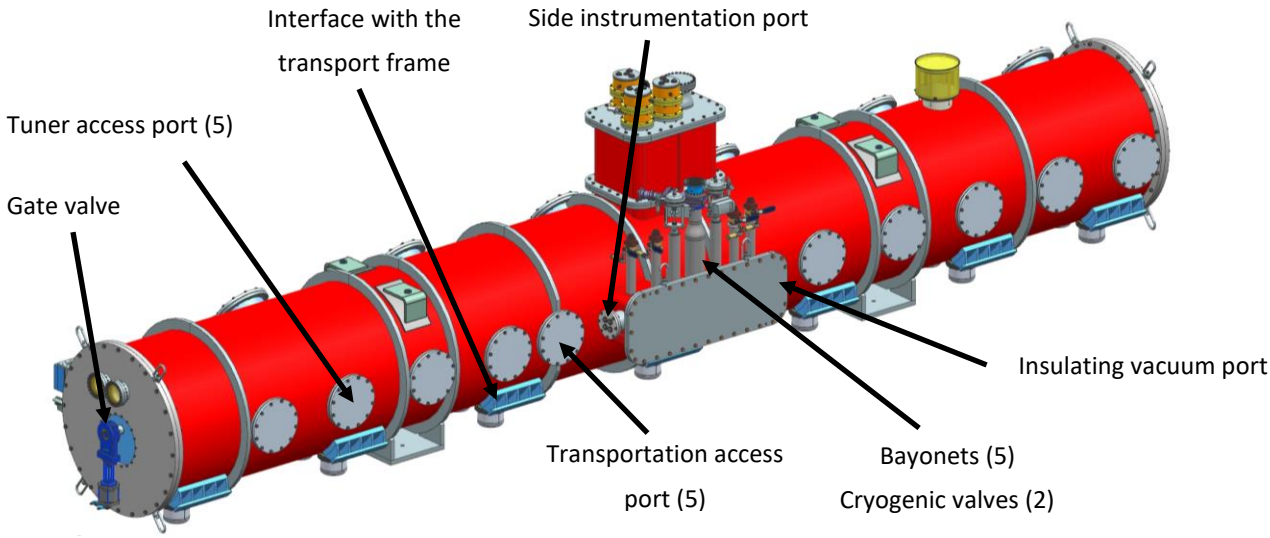

Figure 2: HB650 cryomodule external features - View 2

Beam line connections

A gate valve is located at each end of the beamline. These two gate valves are the only connection between adjacent cryomodules or other beamline components. Unlike systems with continuous insulating vacuums and cryogenic piping systems, (e.g. XFEL, LCLS-II), cryomodule connections in PIP-II are made to the linac infrastructure at each cryomodule.

For the HB650 cryomodule, we need a gate valve with the following properties:

- DN 63 mm
- All metal gate valve
- Pneumatic actuator
- Solenoid valve with position indicator
- Radiation resistant
- Removable actuator

The gate valve from VAT has the reference: VAT 48236-CE44-AJJ1.

Alignment and stand Interface

The cryomodule will be aligned both internally and externally. During this process fiducial blocks will be used holing 1.5” SMR nests

The final alignment of the cavity will be done just before putting in place the top part of the thermal shield. There is no need or ability to adjust the internal cavities relative to each after the insertion of the coldmass in the vacuum vessel.

Using HBCAMs and the targets located on the top of the cavity, it is possible to check that the cavity will remain align at the end of the assembly process once the center axis of the vacuum vessel will match the cavity string axis modulo the movement during the cooldown.

During cool down HBCAMs located on the vacuum vessel endcaps will monitor the movement of the cavities to check that they remain aligned.

Handling, Transportation, Structural Interface to Facility

The AD/Mech Systems team shall provide the cryomodule stands in order to align the cryomodules in the PIP II tunnel and the cryomodule movers to bring the cryomodules into the PIP II tunnel.

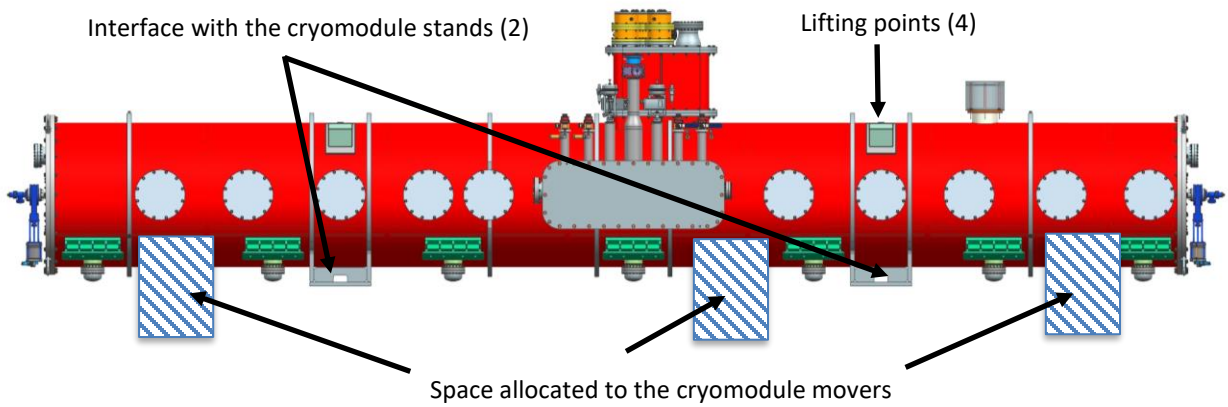

Figure 3: Interface with the cryomodule stands and the cryomodule movers

In order for cryomodules to be installed in the PIP-II tunnel, the cryomodules must reside within a specified transverse volume envelope, both while in position and during transportation down the service aisle. As such, the HB650 cryomodule shall reside within the transverse envelope and meet all requirements defined in drawing F10051442 [2]. Note that this drawing also defines the height of the interface between the adjustment stage and the girder.

The HB650 team shall provide the tooling and fixturing required, if any, to transport the HB650 cryomodule by truck to CMTF or the PIP-II facility.

The HB650 team shall provide rigging interfaces and instructions to allow the HB650 cryomodule to be manipulated by crane. If a below-the-hook lifting fixture is required, the HB650 team shall provide the fixture. Hard points for the lifting fixture with M36 threads are shown in Figure 3.

The CMTF facility provides a loading area with truck access and 24’ hook height. In order to clear PIP-II Injector Test cave walls during installation, the HB650 rigging scheme shall be designed to provide a minimum of 8.5’ clearance below the HB650 during a lift. A clearance of 11.5’ would be more desirable, in that the top layer of wall blocks would not need to be removed. A clearance of 16’ would be optimal, in that only roof blocks over the HB650 location would need to be removed.

The PIP-II conventional facility shall provide a loading area with truck access and hook height > 20’

The AD/Mech Systems team (TBR) shall provide a cryomodule transportation fixture for installation of HB650 and other cryomodules in the PIP-II tunnel. This fixture may use the hoisting and/or adjustment interfaces on the cryomodule. This fixture will not be designed or used in the PIP-II Injector Test installation.

The following figures shows the location of the interfaces:

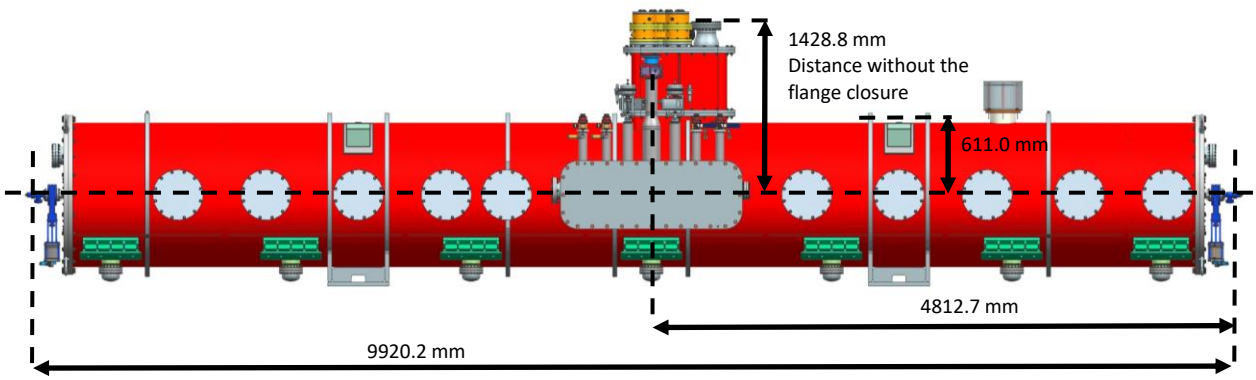

Figure 4: HB650 Cryomodule side view

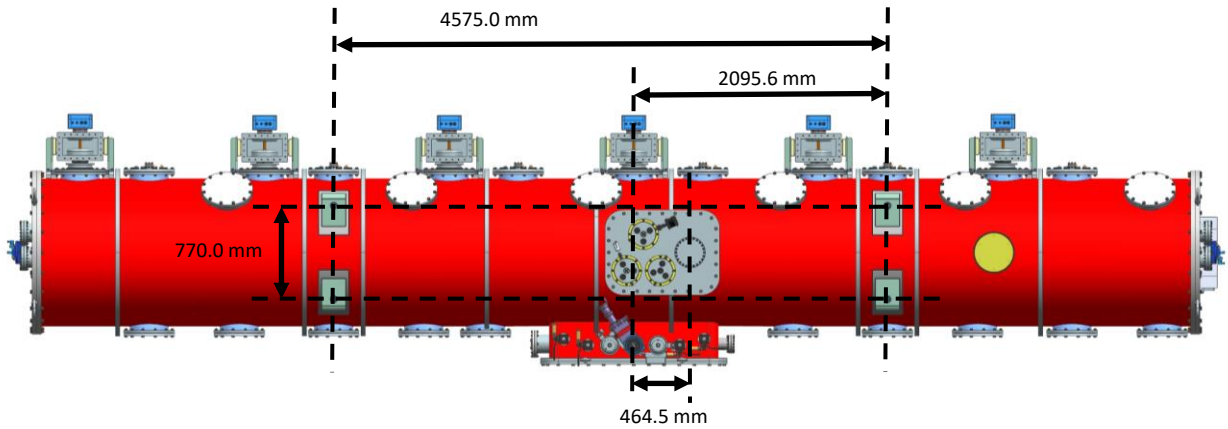

Figure 5: HB650 Cryomodule top view

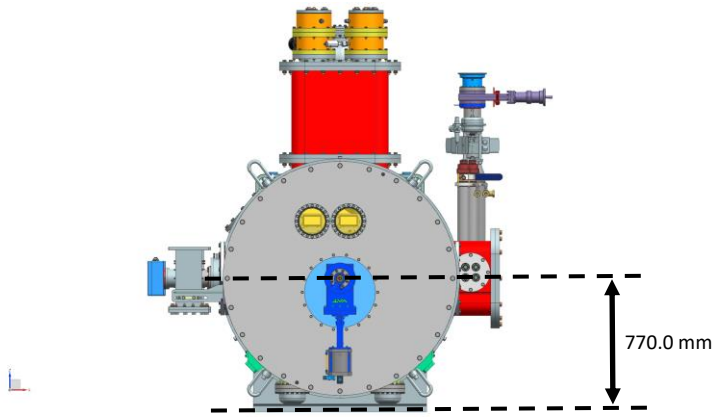

Figure 6: HB650 Cryomodule front view

Facility Utilities

The HB650 cryomodule requires a source of clean, dry nitrogen for cryostat backfill. The AD/Fluids team shall provide nitrogen in the PIP2IT cave for this purpose. (Note: this nitrogen is NOT used for beamline vacuum backfill).

Air for Valve Operation

The HB650 cryomodule requires compressed air for valve operation (intermittent use). The AD/Fluids group shall provide this air, with the following parameters:

- 5 valves on HB650 CM (2 beamline vacuum gate valves, 1 insulating vacuum gate valve, 2 cryogenic valves)
- "Instrument quality" air - conditioned, dry, low-oil
- System MAWP 100 psig
- System supply pressure at interface to HB650 > 80 psig

Air for Coupler Operation

The HB650 cryomodule also requires compressed air for the coupler window and DC block (continuous use). See block diagram below for the general configuration.

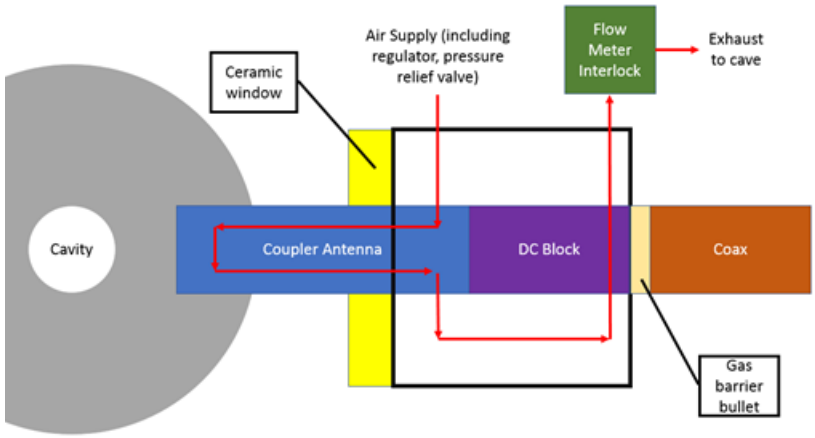

Figure 7: Compressed air flow for couplers

The AD/Fluids group shall provide this air, with the following parameters:

- One supply line to each coupler/DC block assembly. The 8 couplers are supplied in parallel
- Each coupler/DC block assembly are supplied with a single air flow, which flows through the antenna first and then the DC block
- Conditioned air
  - Particles > 5 µm filtered
  - Moisture removed, dew point < -10°C
    40°F dew point at PIP2IT is acceptable for the Prototype HB650 Cryomodule
  - Oil removed
- System protected with relief valve

    - The setpoint needs to be as low as reasonable for providing 15 psig at the couplers so the setpoint is system dependent.
    - The setpoint will impact the sizing of the relief valves at the couplers
- System supply pressure at interface to HB650 regulated
    - Maximum pressure 15 psig
    - One regulator for all 8 couplers
    - Relief on or near the coupler set to ~ 18 psig (bubble leak tight at 15 psig) appropriately sized for supply from the system
- Flow rate requirements
    - Absolute minimum permissible flow: > 1g/s (> 1.7 SCFM) per coupler/DC block
    - Initial setting of interlock: > 2 SCFM per coupler/DC block
    - Target nominal flow rate range: > 2.5 - 3.0 SCFM per coupler/DC bock
    - Total target nominal flow range delivered to HB650 for 8 couplers = 20 - 24 SCFM
- Instrumentation for return air flow from each coupler/DC block required (8 return flow measurements total). HB650 team to provide air-tight coupler and DC block. AD/RF to provide air-tight bullet at RF connection to DC block. AD/Fluids team to provide flow measurement.
- Inlet Fitting on HB650: Push-to-connect for ¼" OD plastic tubing (Festo QSS-1/4T or equivalent)
- Outlet Fitting on HB650: Push-to-connect for ¼" OD plastic tubing (McMaster 51065K17 or equivalent)

Other Utilities

- Helium for guard gas is required for the control valves and the pressure transducer ports.
- The HB650 cryomodule does not require water cooling. Specification for any water needed for support equipment is not within the scope of this document.
- The HB650 cryomodule does not require AC power in the cave for normal operations. Minimal AC power is required for the HBCAM system during installation, the cooldown and the warmup which can be accomplished with a standard 120 VAC outlet. Specification for any AC power needed for support equipment is not within the scope of this document.
- Note that the HB650 cryomodule is sensitive to vibration induced by fluids systems. Please see the chapter "microphonic" in this document.

Coupler Port (CP) & RF Connections

The HB650 cryomodule has 6 coupler ports located along the length of the Cryomodule. The coupler ports include the RF connection and associated instrumentation. The Figure 8 shows the locations of the coupler ports.

The HB650 provides an RF input connection: 3 1/8" EIA standard 50 Ohm Coax. AD/RF team provides RF distribution to this point, including any directional couplers, local circulators, and circulator loads. The design of 650 MHz high power coupler waveguide needs to be compatible with RF power distribution (HPRF) from the RF power amplifier. The drawing of the waveguide is available in Teamcenter F10125305.

Unique L3-L3 ID	Interface #	Interface ID	Interface Name
1954	2	1954-002	HB650 RF power input connection (650MHz)

Each port accommodates multiple connections in addition to the RF input. Details of the instrumentation is presented in Teamcenter F10101087.

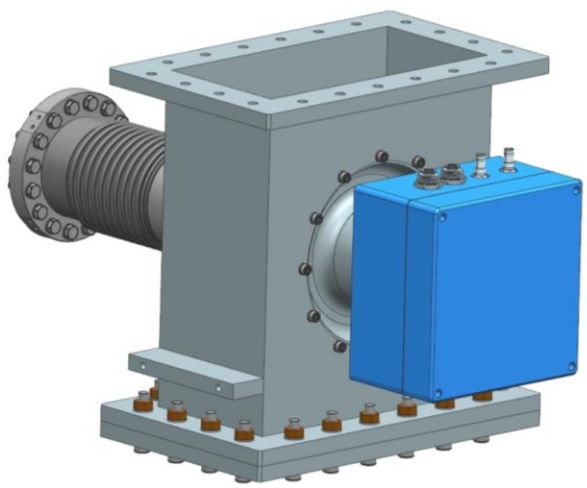

Figure 8: HB650 coupler Air side - F10082111

The operating voltage is between XX and XX kV. Couplers for HB650 at PIP-II Injector Test will be rated and tested to XXX kW [3].

In addition to the RF input, each coupler port accommodates other instrumentation and interface points:

- One RF field probe (i.e. the E-pickup)
- Thermometry for various points in the coupler
- Connections for field emission probe, which looks for emitting electrons
- Two air inlets (see section 5)
    - 1 air inlet (A) uses dry room temperature air to keep the ceramic window warm
    - 1 air inlet (B) to keep the inlet RF power chamber cool

- A connection for high voltage bias
- A power supply connection for the Photo multiplier tube (PMT) which is looks at the ceramic window.
- A connection for the PMT signal

Tuners and Tuner Access Ports (TAP)

The tuner of the 0.92 650 MHz cavity is F10088673.

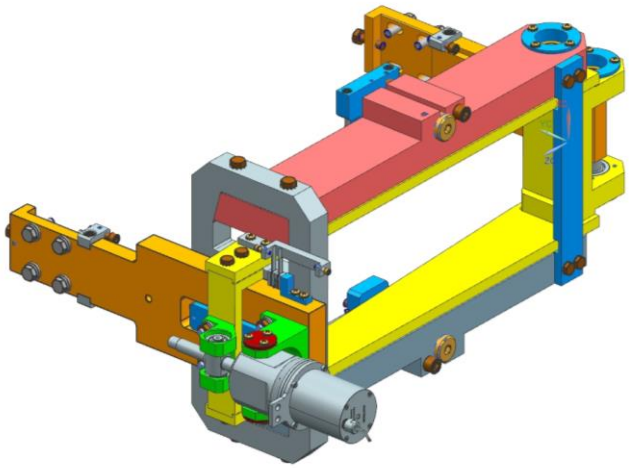

Figure 9: 0.92 HB650 MHz tuner

This tuner consists of a stepper motor, 4 piezos, 2 limit switches and a temperature probe. The tuners are accessed via tuner access ports (TAPs) which are located on each side of the cryomodule. The entire actuation group is assembled on a removable cartridge in order to increase its reliability allowing the removal from the cryomodule via the tuner access port in the case of failure of one of the components.

Note that in order to have better access, there is no instrumentation on these tuner access ports.

Instrumentation ports

Main instrumentation ports

All the instrumentation ports are the same. Nevertheless, the instrumentation is different on each of them. Details of the instrumentation is presented in Teamcenter F10101087.

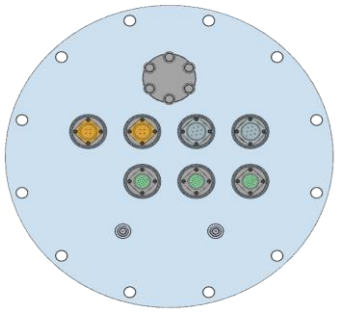

Figure 10: Main instrumentation port

Top instrumentation ports

3 pressure transducer lines connect the two-phase helium pipe to the top of the cryomodule. These lines are used in order to measure the pressure inside the two-phase helium pipe but also to carry all the instrumentation located inside the cavities and helium level probes. A helium guard is necessary for each of this pressure transducer line, the interface is done using ¼" VCR connectors. Details of the instrumentation is presented in Teamcenter F10101087.

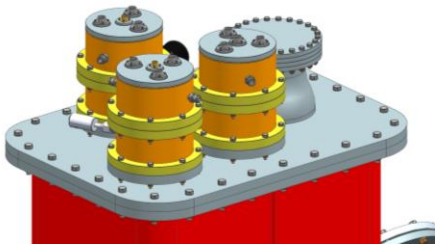

Figure 11: Top instrumentation ports

Side instrumentation port

Four 19-pins connectors are used for measuring the temperature and for regulating the cryogenic valves. Details of the instrumentation is presented in Teamcenter F10101087.

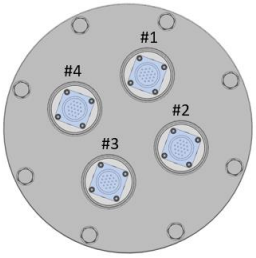

Figure 12: Side instrumentation port

Cryogenic connections

Cryogenic Circuits

The HB650 Cryomodule will have three sections held at different temperatures:

- The outer shield is held at 35-50 K with gaseous Helium
- The inner shield is held at 5 K with liquid helium
- The cavities and solenoids are held at 2 K with superfluid liquid helium

Interfaces of each circuits are as follows:

- The 35-50 K and 5 K helium connections are through Fermilab Bayonets (F10085260)
- The sub atmospheric pumping line holding the 2 K circuit at low pressure is the large bayonet of JLAB design (F10008295).

Location of the interface points and dimensional information are shown in the Figure 13 and in the Figure 14. From left to right: 5K Inlet, 50K inlet, JT valve, Pumping line, CD valve, 50K outlet, 5K outlet.

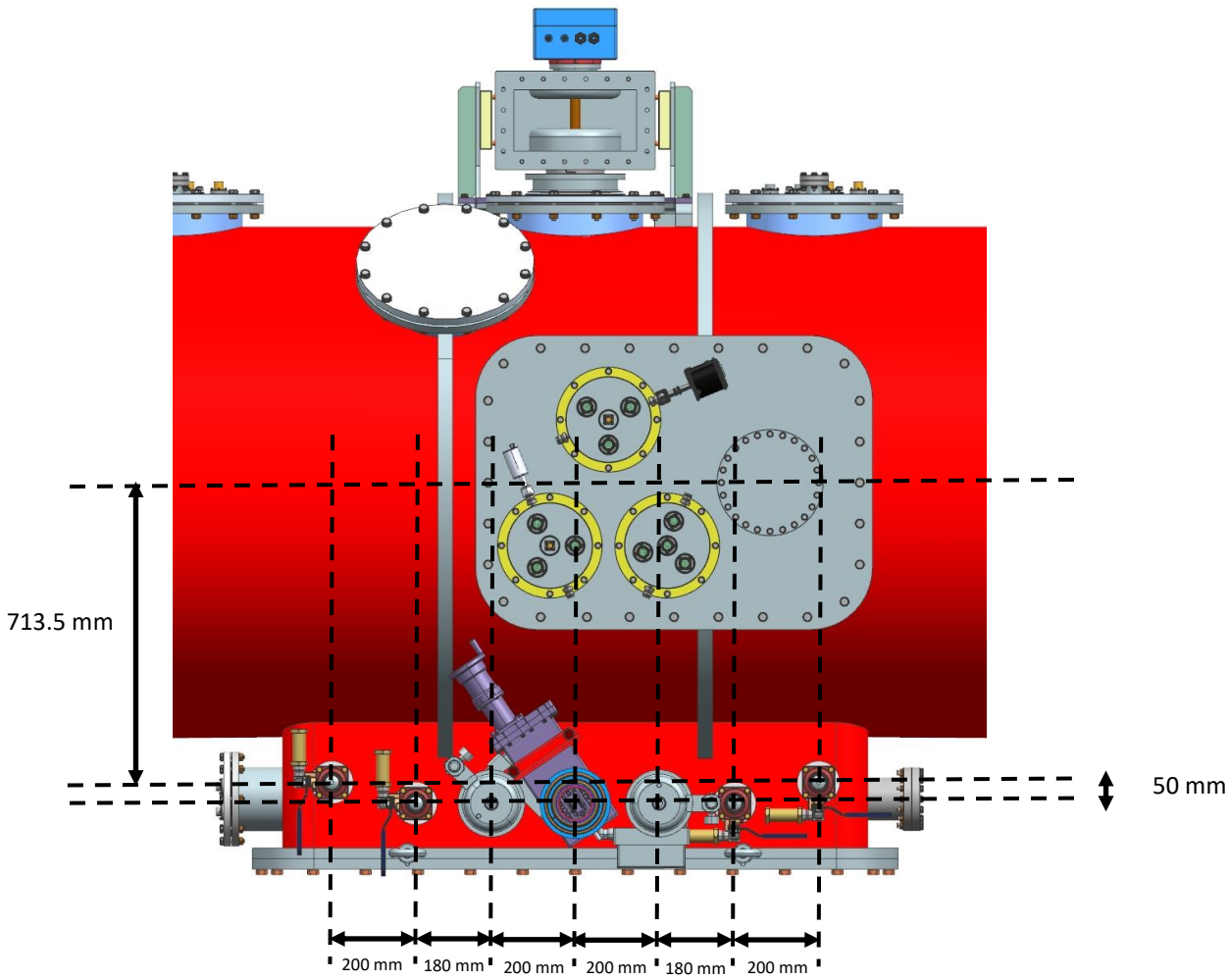

Figure 13: Interfaces on the cryogenic side port - View 1

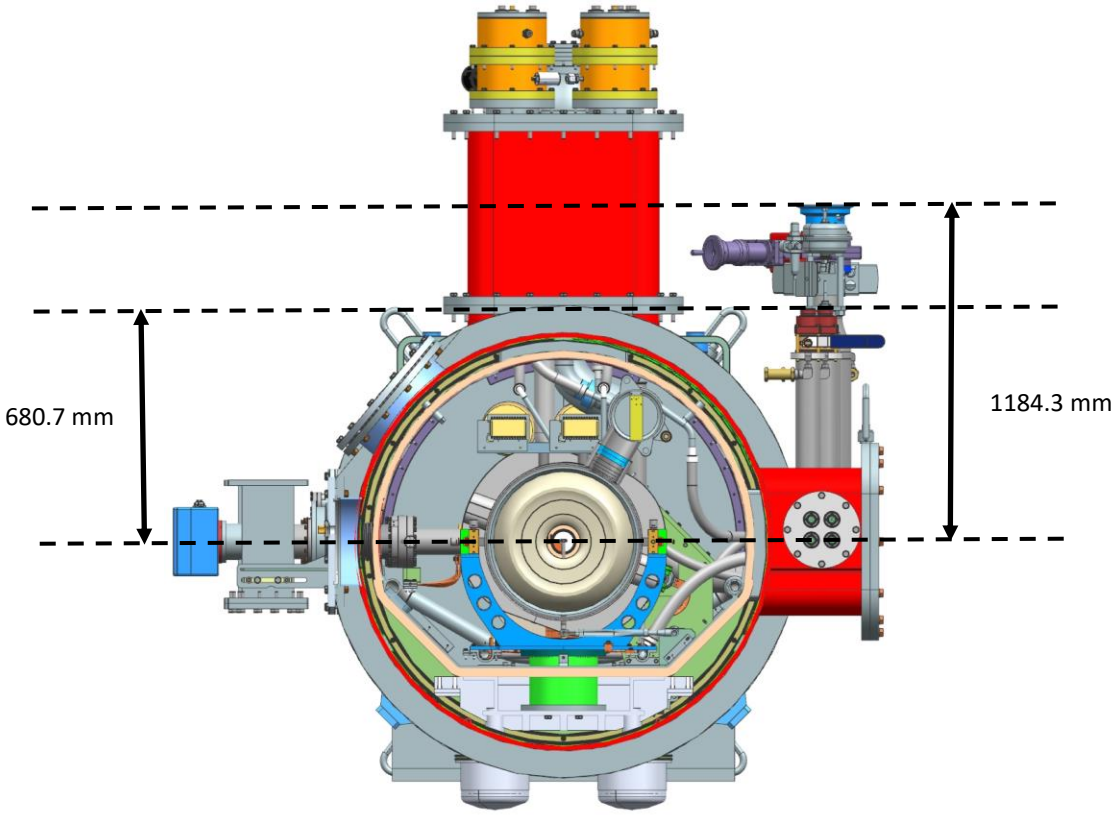

Figure 14: Interfaces on the cryogenic side port - View 2

The HB650 cryomodule includes two VELAN DN15 cryogenic valves, serving as a JT valve and a cooldown control valve. The data sheet for the cryogenic valves can be viewed in the appendix.

Cryogenic controls

The HB650 cryomodule itself does not include any controls, only the instrumentation and pneumatic valves as described herein. The AD/Cryo team is responsible for implementing controls to achieve and maintain the requisite operation parameters of the HB650 cryomodule.

The PI&D is presented in Teamcenter F10101087.

Coldmass Mass

In order to design the PIP-II Injector Test Cryo Distribution System (CDS), it is necessary to define the thermal cold mass in each temperature regime. The HB650 shall have cold masses as specified in the table below:

Temperature	Mass	Comments
Mass at 35-50 K	Around 800 kg	No mass for bayonets and JT with connecting lines, no mass for thermal straps
Mass at 5 K	Around 60 kg	No mass for bayonets and JT with connecting lines, no mass for thermal straps
Mass at 2 K	Around 1300 kg	No mass for bayonets and JT with connecting lines, no Power couplers and thermal straps

Details of the mass of each component is available in Teamcenter ED0009469.

Helium volume

The following table summarizes the volume of helium in the cryogenic lines. It has been considered that the two-phase helium pipe was filled with 50% of helium.

Two phase He pipe	0.0695	m3
Chimneys dressed cavities	0.0065	m3
5 K He line	0.0091	m3
6 Dressed cavities	0.4375	m3
Total Helium at 2 K and 5 K	0.5226	m3

35-50 K He line	0.0274	m3

Pressure Relief

- The HB650 cryomodule includes a relief line of the 2 K circuit, as shown in Figure 1. The port is a 10” Conflat Euro Series flange, the location of this flange is described in Figure 4, Figure 5 and Figure 15. Nevertheless, the HB650 cryomodule does not include a relief valve on this line. The AD/Cryo team is responsible of designing the relief line beyond the cryomodule and to implement relief valves and/or rupture disks.
- The HB650 does provide pressure relief of the 35-50 K and 5 K circuits thanks to a relief valve located on each bayonet.
- The HB650 does provide an integral parallel-plate pressure relief for the cryostat as shown in Figure 1.

Cryomodule vacuum systems

Beamline Vacuum

- The connection to beamline vacuum is via the gate valves detailed in the chapter "beam line connections".
- The HB650 cryomodule itself does not provide any pumping of beamline vacuum (except for natural cryo pumping). The AD/Vacuum team shall provide pumping at each end of the HB650 cryomodule to achieve requisite vacuum levels before and after cooldown, as shown in Table 1.
- All vacuum work on the HB650 beamline vacuum and adjacent vacuum systems shall follow low-particulate UHV vacuum practices as defined in the PIP-II Injector Test Vacuum FRS [7].
- The CMTF/Facilities team shall provide a cleanroom and mass-flow-control pumping station for use with the HB650 cryomodule.

Insulating Vacuum

- The HB650 cryomodule deliverable does not include any pumping of insulating vacuum (except for natural cryo pumping).
- The HB650 does provide a 6" Conflat Euro Series flange for insulating vacuum pumping hardware, the location is shown in Figure 15.
- The AD/Vacuum team shall provide insulating vacuum hardware to achieve requisite vacuum levels before and after cooldown, as shown in Table 1.

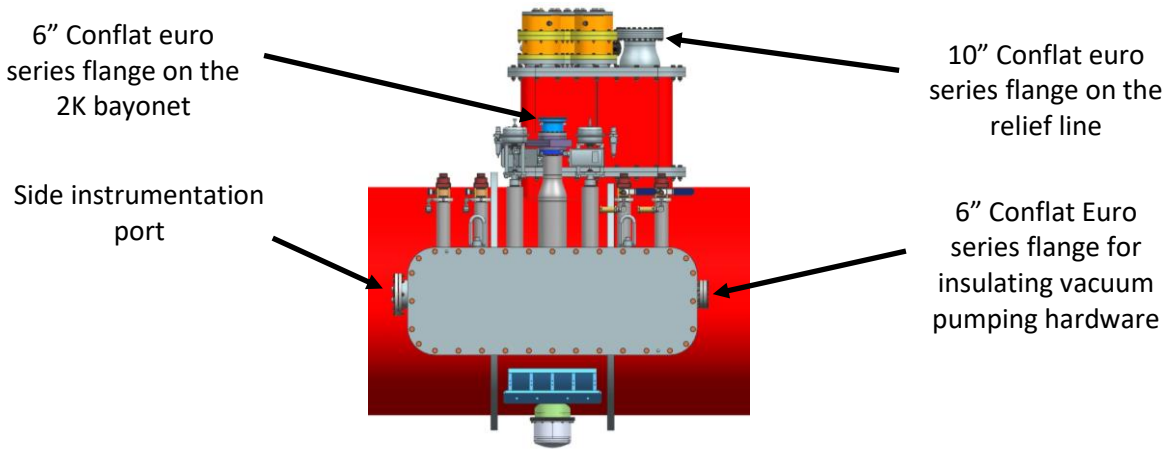

Figure 15: Insulating Vacuum Pumping Port - Arrangement does not match current design

Coupler Vacuum – none

There is no separate coupler vacuum on HB650 cryomodule.

Target Vacuum Levels

Maximum H_2 flux from the HEBT to the HB650 shall be INSERT. AD/Vacuum is responsible for oversight of HEBT/Dump design to ensure this requirement is met.

Note

- HWR cryo-pumping is assumed to effectively isolate HB650 from MEBT-generated H_2. As such, no HB650-based requirement is levied on the MEBT.
- The PIP-II Injector Test vacuum system shall be designed to achieve vacuum levels in the HB650 as specified in Table 1. The AD/Vacuum team is responsible for design and oversight to ensure these requirements are met.

Table 1: Requirements and devices of the cryomodule vacuum subsystems

		Beamline vacuum	Insulating vacuum
Description		In contrast to storage ring type light sources, here the beam particles pass the straight linac only once. Therefore, the beamline vacuum pressure requirement with respect to losses due to scattering on the residual gas are relaxed. Effects like emittance growth, fast ion instabilities or dynamic pressure increase due to synchrotron radiation are negligible. However, particles can act as field emitters and thus limit the performance of the cavities.	The insulating vacuum serves to minimize convective heat transfer to the cavity helium vessel and heat conduction through residual gas the MLIs. For this purpose, a pressure of less than 1.0×10^{-7} mbar is required for the insulating vacuum space.
Pressure (mbar)	**At cold**	$\leq 2 \times 10^{-10}$	$\leq 2 \times 10^{-10}$
	prior to cool-down	$\leq 1 \times 10^{-8}$	$\leq 1 \times 10^{-7}$
Characteristics		Particle free pump-down/venting	Pressure dominated by water in MLI, permeation through many O-rings
Pumps	**Roughing**	Turbo, w/ particle free setup	Roots Blower, then Turbo
	In operation	Ion pump from ends of cryomodule	Turbo
Gauges	**Cold cathode gauge**	Inverted magnetron, BNC/SHV connectors, 2.75" CFF, MKS #104220008	
	Convection gauge	2.75" CFF, MKS #103170024SH	

RF Interlocks

The AD/RF and AD/interlocks team shall implement RF interlocks. RF interlocks shall be in place during conditioning and operation of the HB650 cavities. The RF interlock system monitors signals from the following sources in the HB650 cryomodule:

- Monitor the multipacting arc activity in the coupler using a PMT at the warm region.
- Three field emission probes located at the warm region of the coupler, the 35-50 K region of the coupler, and the cold cavity side of the coupler (5 K region). These probes monitor the coupler and cavity for plasma inception.
- The coupler ceramic window temperature on the warm region is monitored using an IR sensor head and a separate PT1000 platinum RTD.
- Air flow through RF couplers
- Cavity vacuum soft and hard limits from the cold cathode gauges and the vacuum pumps. The hard limits are programmed into the CC gauge and the vacuum pump. The soft trip limits are programmed into the PLC which digitizes the analog signals from each of these devices. A TTL bit is used to interface these devices to the interlock system when the vacuum level transitions beyond the trip limit.

The main task of the interlock system is to control the fast GaAs switch which enables low level RF to the amplifier. This switch is enabled when all RF interlocks are made up and controlled by a TTL high sourced at the System Control board in the interlock system. In the event of any trip detected, the RF switch is opened in approximately 120 nanoseconds for all type of trips except the Field emission probes where the switch opening is delayed based on the amount of energy deposition required to condition the source away < 1.0 Joule (RF energy times TF pulse duration).

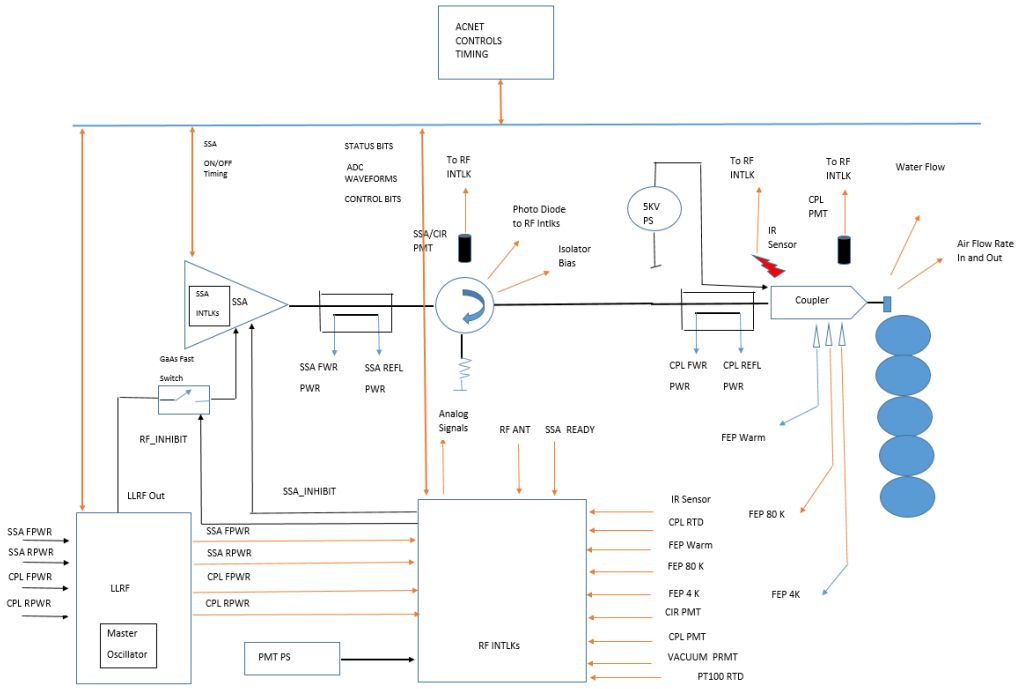

Figure 16: Overview Schematic of the HB650 interlocks

Microphonics

Isolation and damping of external sources of vibration from the HB650 cryomodule is critical to achieve the tight resonance control specifications for PIP-II.

In PIP-II Injector Test, no active vibration control is planned. As such, passive measures are needed to ensure that the vibration environment is workable.

All hardware connecting to HB650, and all hardware within 3 m of the cryomodule shall conform to the vibration control best-practices documented in [8]. This specifies minimum qualitative requirements for system design. Further design and analysis may reveal that more stringent and quantitative requirements are needed for some systems. Specific considerations for some critical interfacing systems are listed below.

Cryogenics

Cryogenic lines should all include bellows/vibration breaks close to the cryomodule, with no hard mountings in between. This should isolate external mechanical vibrations from transmission into the module. Additionally, sharp transitions/restriction of helium flow should be avoided, reducing flow noise. These cryogenic lines should also be properly constrained and have their movement damped.

Fluids

RF drive lines will have water cooling, and similar best practices can be applied here as to cryogenic lines: no hard mountings connected to the cryomodule, avoid flow restrictions/transitions/throttling to reduce flow noise. These are less complicated because soft lines can be used, not in a vacuum jacket. These lines should also be properly constrained and have their movement damped.

Gas lines will be used to cool the cavity couplers. Given their proximity to the cavity, it will be important to avoid any flow noise in these lines. Experience with the RFQ air lines indicates that noise should not be an issue as the lines are sized. Additionally, they should be vented far from the cryomodule. Use of soft lines for supply and exhaust reduces danger of vibration transmission.

Cryomodule Footing

The cryomodule will be hard mounted to a girder. That is, it will essentially be rigid to the facility floor. As such, it is important to minimize vibration sources in nearby equipment that can couple into floor.

Beamline Connections

Bellows should be incorporated along the beamline to minimize vibration transmissions. These bellows should be in a free state during operations.

RF Connections

The coax line to the cavities (provided by AD-RF) should incorporate flexibility at the interface to the coupler. This should be implemented with a flexible section of coax near the cryomodule. Damping should be incorporated to further minimize transmission of vibration. Air flow in the RF couplers should not excite microphonics at dangerous level.

Signal Connections

Mostly signal wires and small RF cables, these should be all either soft or flexible lines. Some strain relief will likely be built into these wires, and they are not considered a dangerous source of vibration.

External sources and measurement devices

The PIP-II Injector Test/CMTF facility was designed with consideration for vibration isolation. For example, the cryoplant is built on a separate foundation. Hardware near the cryomodule should be designed and installed per the best practices document [7]. However, given that PIP-II Injector Test is a shared facility and a test facility, there is currently no intention to impose broad vibration-control requirements or operations constraints within the facility. Experience with PIP-II Injector Test will guide further thinking in this matter.

The PIP-II Injector Test/Facilities team shall provide environment monitoring devices close to HB650 so that environmental vibrations can be monitored. In the case of unacceptable microphonics, this system may be used to identify and mitigate driving sources.

Internal Monitoring Devices

There are no requirements or plans to incorporate vibrating measuring devices in the cryomodule.

Cool down requirements

xxx

References

[1] F10047288: HB650 MHz Proto Cryomodule, Top Assembly.
[2] F10051422: Envelope, Transverse, PIP-II Cryomodules.
[3] ED0001322: FRS, HB650 MHz.
[4] ED0009659: TRS, HB650 MHz.
[5] F10101087: P&ID and Instrumentation list.
[6] F10042546: P&ID, PIP2IT Cryogenic Distribution System.
[7] ED0004444: FRS, PXIE Vacuum Systems.
[8] ED0002931: Vibration control best-practices for PXIE.